chanhvinh.com

BROADCOM®

Data Sheet

ACPL-K49CT

Wide Operating Temperature Automotive R²Coupler™ 20-kBd Digital Optocoupler Configurable as Low-Power, Low-Leakage Phototransistor

Overview

The Broadcom® ACPL-K49CT is a single-channel, high-temperature, high-CMR, 20-kBd digital optocoupler, configurable as a low-power, low-leakage phototransistor, specifically for use in automotive applications. The stretched SO-8 package outline is designed to be compatible with standard surface-mount processes.

This digital optocoupler uses an insulating layer between the light emitting diode and an integrated photo detector to provide electrical insulation between input and output. Separate connections for the photodiode bias and output transistor collector increase the speed up to a hundred times over that of a conventional phototransistor coupler by reducing the base-collector capacitance.

The Broadcom R²Coupler™ isolation product provides reinforced insulation and reliability that delivers safe signal isolation critical in automotive and high-temperature industrial applications.

Features

- High temperature, high reliability, low-speed digital interface for automotive applications
- 30-kV/µs high common-mode rejection at V_{CM} = 1500V (typical)
- Low-power, low-leakage phototransistor in a 4-pin configuration
- Compact, auto-insertable stretched SO-8 package
- Qualified to AEC Q100 Grade 1 test guidelines
- Wide temperature range: –40°C to +125°C
- Low LED drive current: 4 mA (typical)
- Low propagation delay: 20 µs (maximum)
- Worldwide safety approval:
  - UL1577 approval, 5 kV_{rms} /1 minute
  - CSA approval
  - IEC/EN 60747-5-5

Applications

- Automotive low-speed digital signal isolation interface
- Inverter fault feedback signal isolation
- Switching power supplies feedback circuit

CAUTION! It is advised that normal static precautions be taken in handling and assembly of this component to prevent damage and/or degradation which may be induced by ESD. The components featured in this data sheet are not to be used in military or aerospace applications or environments.

chanhvinh.com

Functional Diagram

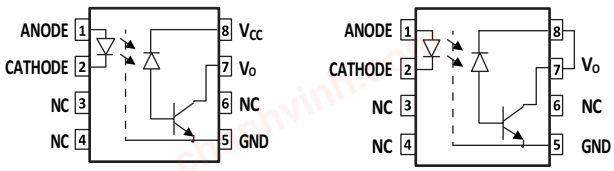

NOTE:

- 5-pin configuration: connect a 0.1-µF bypass capacitor between pin 5 and pin 8.
- 4-pin configuration: externally short pin 7 and pin 8.

Truth Table

LED	V_O
ON	LOW
OFF	HIGH

Ordering Information

Part Number	Option (RoHS Compliant)	Package	Surface Mount	Tape and Reel	UL 5000 V_{rms}/ 1-Minute Rating	IEC/EN 60747-5-5	Quantity
ACPL-K49CT	-000E	Stretched SO-8	X	—	X	—	80 per tube
	-060E		X	—	X	X	80 per tube
	-500E		X	X	X	—	1000 per reel
	-560E		X	X	X	X	1000 per reel

Choose a part number from the part number column and combine it with the desired option from the option column to form an order entry.

Example: Specify ACPL-K49CT-560E to order the product comprised of an SSO-8 Surface Mount package in Tape and Reel packaging with the IEC/EN 60747-5-5 safety approval and RoHS compliance.

Option data sheets are available. Contact your Broadcom sales representative or authorized distributor for information.

chanhvinh.com

Outline Drawing (Stretched SO-8)

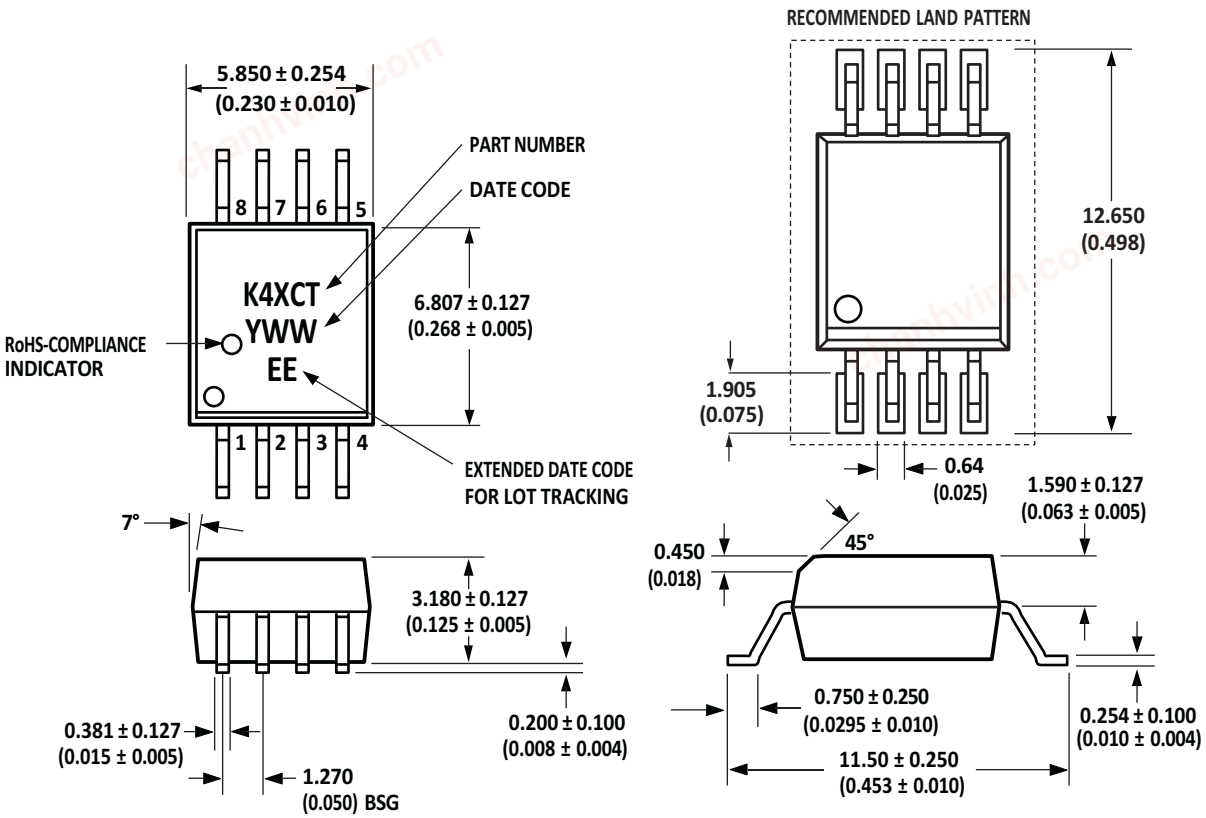

Note:
Dimensions in millimeters and (inches).
Lead coplanarity = 0.1 mm (0.004 inches).
Floating lead protrusion = 0.25 mm (10 mils) max.

Recommended Pb-Free IR Reflow Profile

Recommended reflow condition as per JEDEC Standard J-STD-020 (latest revision).

NOTE: Use non-halide flux.

Regulatory Information

The ACPL-K49CT is approved by the following organizations:

UL	UL 1577, component recognition program up to V_{ISO} = 5000 V_{rms}
CSA	CAN/CSA-C22.2 No.62368-1
IEC/EN	IEC/EN 60747-5-5, Maximum working insulation voltage, V_{IORM} = 1260 V_{PEAK}, Highest allowable overvoltage, V_{IOTM} = 8000 V_{PEAK}

chanhvinh.com

Insulation-Related and Safety-Related Specifications

Parameter	Symbol	ACPL- K49CT	Unit	Conditions
Minimum External Air Gap (Clearance)	L(101)	8	mm	Measured from input terminals to output terminals, shortest distance through air.
Minimum External Tracking (Creepage)	L(102)	8	mm	Measured from input terminals to output terminals, shortest distance path along body.
Minimum Internal Plastic Gap (Internal Clearance)	—	0.08	mm	Through insulation distance conductor to conductor, usually the straight line distance thickness between the emitter and detector.
Tracking Resistance (Comparative Tracking Index)	CTI	>600	V	DIN IEC 112/VDE 0303 Part 1.
Isolation Group (DIN VDE 0109)	—	I	—	Material Group (DIN VDE 0110).

IEC/EN 60747-5-5 Insulation-Related Characteristics for Options 060E and 560E

Description	Symbol	Characteristic	Unit
Installation classification per DIN VDE 0110/1.89, Table 1			
For rated mains voltage ≤ 300 V_{rms}	—	I-IV	—
For rated mains voltage ≤ 600 V_{rms}	—	I-IV	—
Climatic Classification	—	40/125/21	—
Pollution Degree (DIN VDE 0110/1.89)	—	2	—
Maximum Working Insulation Voltage	V_{IORM}	1260	V_{PEAK}
Input to Output Test Voltage, Method b V_{IORM} x 1.875 = V_{PR}, 100% Production Test with t_m = 1 second, Partial Discharge < 5 pC	V_{PR}	2362	V_{PEAK}
Input to Output Test Voltage, Method a V_{IORM} x 1.6 = V_{PR}, Type and sample test, t_m = 10 seconds, Partial Discharge < 5 pC	V_{PR}	2016	V_{PEAK}
Highest Allowable Overvoltage (Transient Overvoltage, t_{ini} = 60 seconds)	V_{IOTM}	8000	V_{PEAK}
Safety Limiting Values (Maximum values allowed in the event of a failure)			
Case Temperature	T_S	175	°C
Input Current	$I_{S,INPUT}$	230	mA
Output Power	$P_{S,OUTPUT}$	600	mW
Insulation Resistance at T_S, V_{IO} = 500V	R_S	$>10^9$	Ω

chanhvinh.com

Absolute Maximum Ratings

Parameter		Symbol	Min.	Max.	Unit
Storage Temperature		T_S	–55	150	°C
Operating Ambient Temperature		T_A	–40	125	°C
Junction Temperature		T_J	—	150	°C
Lead Soldering Cycle	Temperature	—	—	260	°C
	Time	—	—	10	s
Average Forward Input Current		$I_{F(avg)}$	—	20	mA
Peak Forward Input Current (50% duty cycle, 1-ms pulse width)		$I_{F(peak)}$	—	40	mA
Peak Transient Input Current (≤1-µs pulse width, 300 ps)		$I_{F(trans)}$	—	100	mA
Reversed Input Voltage		V_R	—	5	V
Input Power Dissipation		P_{IN}	—	30	mW
Output Power Dissipation		P_O	—	100	mW
Average Output Current		I_O	—	8	mA
Peak Output Current		$I_{o(peak)}$	—	16	mA
Supply Voltage		V_{CC}	–0.5	30	V
Output Voltage		V_O	–0.5	20	V

Recommended Operating Conditions

Parameter	Symbol	Min.	Max.	Unit
Supply Voltage	V_{CC}	—	20	V
Operating Temperature	T_A	–40	125	°C

chanhvinh.com

Electrical Specifications (DC) for 5-Pin Configuration

Over recommended operating conditions, T_A = –40°C to 125°C, unless otherwise specified.

Parameter	Symbol	Min.	Typ.	Max.	Unit	Test Conditions		Fig.	Note
Current Transfer Ratio	CTR	32	65	100	%	T_A = 25°C	V_{CC} = 4.5V, V_O = 0.5V, I_F = 10 mA	1, 2	a
		24	65	—					
		50	110	150		T_A = 25°C	V_{CC} = 4.5V, V_O = 0.5V, I_F = 4 mA	1, 2	
		35	110	—					
Logic Low Output Voltage	V_{OL}	—	0.1	0.5	V		V_{CC} = 4.5V, I_F = 10 mA, I_O = 2.4 mA	3	
		—	0.1	0.5			V_{CC} = 4.5V, I_F = 4 mA, I_O = 1.4 mA		
Logic High Output Current	I_{OH}	—	$2x10^{-4}$	0.5	µA	T_A = 25°C	V_O = V_{CC} = 5.5V, I_F = 0 mA	7	
		—	$4x10^{-4}$	5			V_O = V_{CC} = 20V		
Logic Low Supply Current	I_{CCL}	—	35	100	µA		I_F = 4 mA, V_O = open, V_{CC} = 20V		
Logic High Supply Current	I_{CCH}	—	0.02	1	µA	T_A = 25°C	I_F = 0 mA, V_O = open, V_{CC} = 20V		
		—	—	2.5	µA				
Input Forward Voltage	V_F	1.4	1.5	1.7	V	T_A = 25°C	I_F = 4 mA	6	
		1.2	1.5	1.8	V				
Input Reversed Breakdown Voltage	BV_R	5	—	—	V		I_R = 10 µA		
Temperature Coefficient of Forward Voltage	$\Delta V/\Delta T_A$	—	–1.5	—	mV/°C		I_F = 10 mA		
Input Capacitance	C_{IN}	—	90	—	pF		f = 1 MHz, V_F = 0V		

a. Current Transfer Ratio in percent is defined as the ratio of output collector current, I_O, to the forward LED input current, I_F, times 100.

Switching Specifications (AC) for 5-Pin Configuration

Over recommended operating conditions. T_A = –40°C to 125°C, V_{CC} = 5.0V, unless otherwise specified.

Parameter	Symbol	Min.	Typ.	Max.	Unit	Test Conditions		Fig.	Note
Propagation Delay Time to Logic Low at Output	t_{PHL}	—	—	20	µs	Pulse: f = 10 kHz, Duty cycle = 50%, I_F = 4 mA, V_{CC} = 5.0V, R_L = 8.2 kΩ, C_L = 15 pF, V_{THHL} = 1.5V		9	
Propagation Delay Time to Logic High at Output	t_{PLH}	—	—	20	µs	Pulse: f = 10 kHz, Duty cycle = 50%, I_F = 4 mA, V_{CC} = 5.0V, R_L = 8.2 kΩ, C_L = 15 pF, V_{THLH} = 2.0V		9	
Common Mode Transient Immunity at Logic High Output	$\|CM_H\|$	15	30	—	kV/µs	I_F = 0 mA	V_{CM} = 1500 V_{p-p}, T_A = 25°C, R_L = 1.9 kΩ	10	a
Common Mode Transient Immunity at Logic Low Output	$\|CM_L\|$	15	30	—	kV/µs	I_F = 10 mA			
Common Mode Transient Immunity at Logic Low Output	$\|CM_L\|$	—	15	—	kV/µs	I_F = 4 mA	V_{CM} = 1500 V_{p-p}, T_A = 25°C, R_L = 8.2 kΩ		

a. Common transient immunity in a Logic High level is the maximum tolerable (positive) dV_{CM}/dt on the rising edge of the common mode pulse, V_{CM}, to assure that the output will remain in a Logic High state (i.e., V_O > 2.0V). Common mode transient immunity in a Logic Low level is the maximum tolerable (negative) dV_{CM}/dt on the falling edge of the common mode pulse signal, V_{CM}, to assure that the output will remain in a Logic Low state (i.e., V_O < 0.8V).

chanhvinh.com

Electrical Specifications (DC) for 4-Pin Configuration

Over recommended operating conditions, T_A = –40°C to 125°C, unless otherwise specified.

Parameter	Symbol	Min.	Typ.	Max.	Unit	Test Conditions		Fig.	Note
Current Transfer Ratio	CTR	70	130	210	%	T_A = 25°C, V_{CC} = V_O = 5V, I_F = 4 mA		4	a
Current Transfer Ratio	CTR (Sat)	24	60	—		I_F = 10 mA	V_{CC} = V_O = 0.5V	5	
		35	110	—		I_F = 4 mA			
Logic Low Output Voltage	V_{OL}	—	0.1	0.5	V	I_F = 10 mA	I_O = 2.4 mA	5	
		—	0.1	0.5		I_F = 4 mA	I_O = 1.4 mA		
Off-State Current	$I_{(CEO)}$	—	$4x10^{-4}$	5	µA	I_F = 0 mA, V_O = V_{CC} = 20V		8	
Input Forward Voltage	V_F	1.4	1.5	1.7	V	T_A = 25°C	I_F = 4 mA	6	
		1.2	1.5	1.8	V				
Input Reversed Breakdown Voltage	BV_R	5	—	—	V	I_R = 10 µA			
Temperature Coefficient of Forward Voltage	$\Delta V/\Delta T_A$	—	–1.5	—	mV/°C	I_F = 10 mA			
Input Capacitance	C_{IN}	—	90	—	pF	f = 1 MHz, V_F = 0V			
Output Capacitance	C_{CE}	—	35	—	pF	f = 1 MHz, V_F = 0V, V_O = V_{CC} = 0V			

a. Current Transfer Ratio in percent is defined as the ratio of output collector current, I_O, to the forward LED input current, I_F, times 100.

Switching Specifications (AC) for 4-Pin Configuration

Over recommended operating conditions, T_A = –40°C to 125°C, V_{CC} = 5.0V, unless otherwise specified.

Parameter	Symbol	Min.	Typ.	Max.	Unit	Test Conditions		Fig.	Note
Propagation Delay Time to Logic Low at Output	t_{PHL}	—	2	100	µs	Pulse: f = 1 kHz, Duty cycle = 50%, I_F = 4 mA, V_{CC} = 5.0V, R_L = 8.2 kΩ, C_L = 15 pF, V_{THHL} = 1.5V		10	
Propagation Delay Time to Logic High at Output	t_{PLH}	—	19	100	µs	Pulse: f = 1 kHz, Duty cycle = 50%, I_F = 4 mA, V_{CC} = 5.0V, R_L = 8.2 kΩ, CL = 15 pF, V_{THLH} = 2.0V		10	
Common Mode Transient Immunity at Logic Low Output	$\|CM_L\|$	15	30	—	kV/µs	I_F = 0 mA	V_{CM} = 1500V_{p-p}, T_A = 25°C, R_L = 8.2 kΩ	12	a
Common Mode Transient Immunity at Logic Low Output	$\|CM_L\|$	15	30	—	kV/µs	I_F = 4 mA	V_{CM} = 1500V_{p-p}, T_A = 25°C, R_L = 8.2 kΩ		

a. Common transient immunity in a Logic High level is the maximum tolerable (positive) dV_{CM}/dt on the rising edge of the common mode pulse, V_{CM}, to assure that the output will remain in a Logic High state (i.e., V_O > 2.0V). Common mode transient immunity in a Logic Low level is the maximum tolerable (negative) dV_{CM}/dt on the falling edge of the common mode pulse signal, V_{CM}, to assure that the output will remain in a Logic Low state (i.e., V_O < 0.8V).

chanhvinh.com

Package Characteristics

Parameter	Symbol	Min.	Typ.	Max.	Unit	Test Conditions	Fig.	Note
Input-Output Momentary Withstand Voltage[a]	V_{ISO}	5000	—	—	V_{rms}	RH ≤ 50%, t = 1 minute, T_A = 25°C		b, c
Input-Output Resistance	R_{I-O}	—	10^{14}	—	Ω	V_{I-O} = 500 V_{dc}		b
Input-Output Capacitance	C_{I-O}	—	0.6	—	pF	f = 1 MHz; V_{I-O} = 0 V_{dc}		b

a. The Input-Output Momentary Withstand Voltage is a dielectric voltage rating that should not be interpreted as an input-output continuous voltage rating.

b. Device considered a two-terminal device: pins 1, 2, 3, and 4 shorted together, and pins 5, 6, 7, and 8 shorted together.

c. In accordance with UL 1577, each optocoupler is proof tested by applying an insulation test voltage >6000 V_{rms} for 1 second.

chanhvinh.com

Figure 1: Current Transfer Ratio vs. Input Current

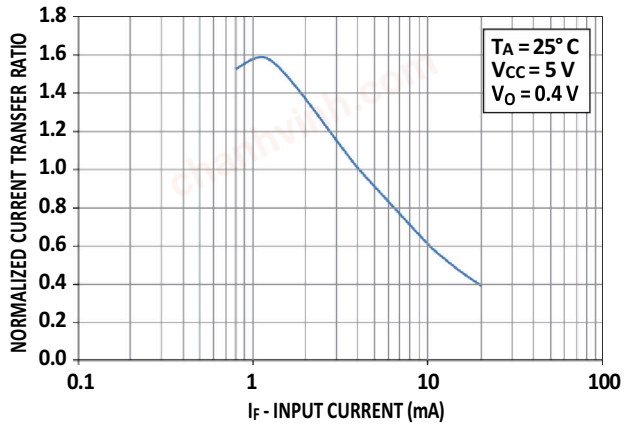

Figure 2: Normalized Current Transfer Ratio vs. Temperature

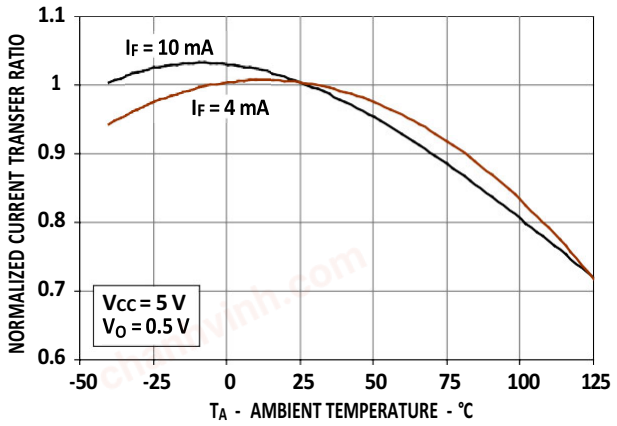

Figure 3: Typical Low-Level Output Current vs. Output Voltage

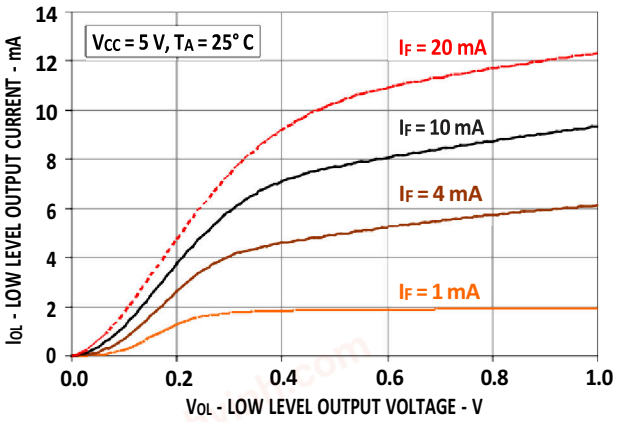

Figure 4: Output Current vs. Output Voltage (4-Pin Configuration)

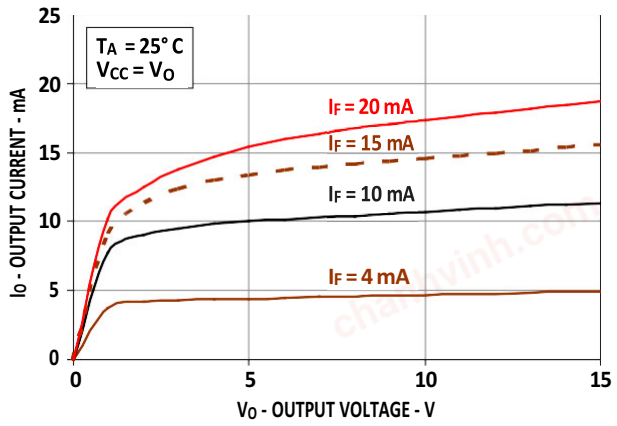

Figure 5: Typical Low-Level Output Current vs. Output Voltage (4-Pin Configuration)

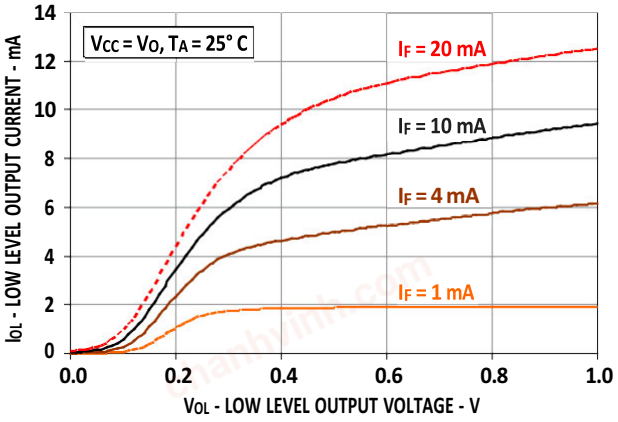

Figure 6: Typical Input Current vs. Forward Voltage

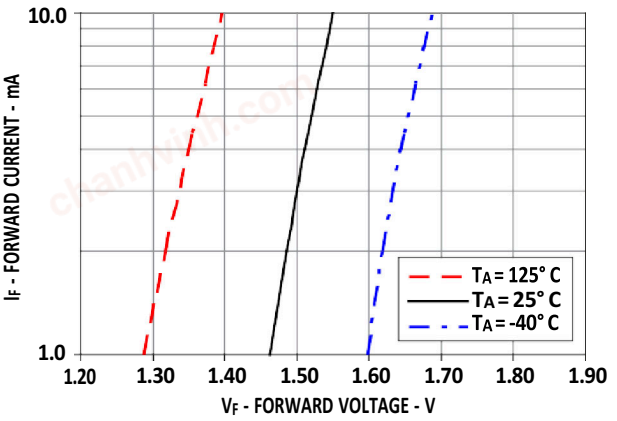

chanhvinh.com

Figure 7: Typical High-Level Output Current vs. Temperature

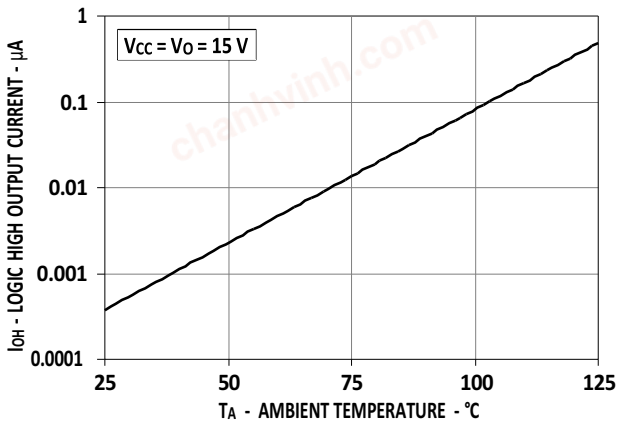

Figure 8: Typical Off-State Current vs. Temperature (4-Pin Configuration)

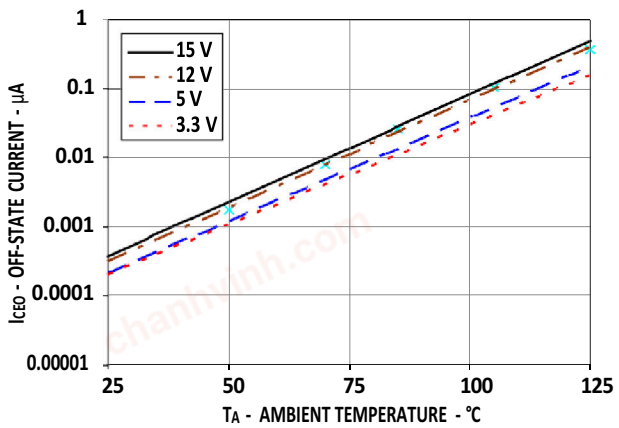

Figure 9: Switching Test Circuit (5-Pin Configuration)

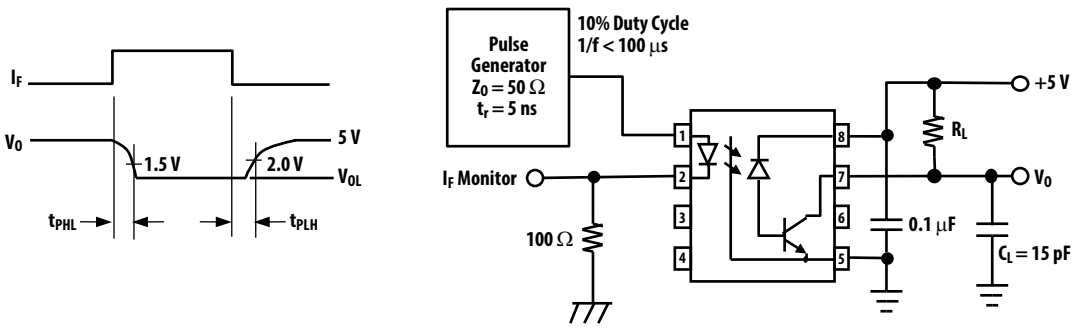

Figure 10: Switching Test Circuit (4-Pin Configuration)

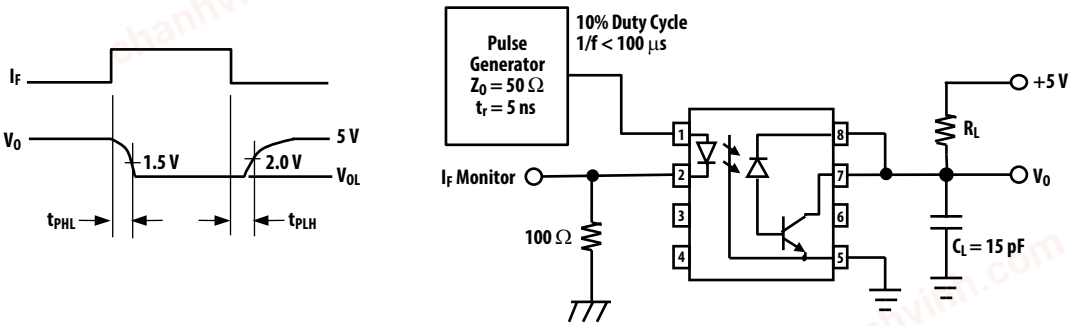

chanhvinh.com

Figure 11: Test Circuit for Transient Immunity and Typical Waveforms (5-Pin Configuration)

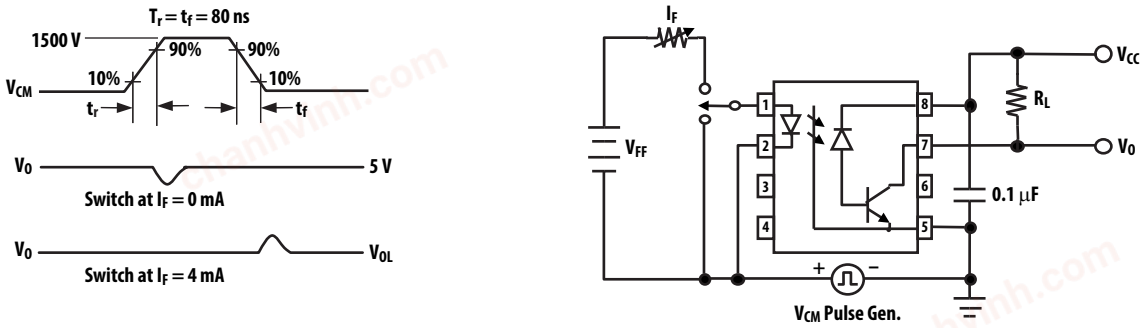

Figure 12: Test Circuit for Transient Immunity and Typical Waveforms (4-Pin Configuration)

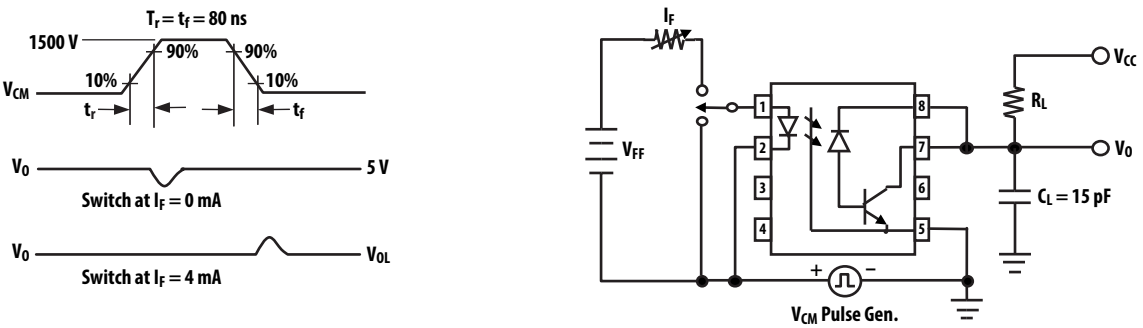

chanhvinh.com

Thermal Resistance Model for ACPL-K49CT

The diagram of ACPL-K49CT for measurement is shown in Figure 13. Here, one die is heated first and the temperatures of all the dice are recorded after thermal equilibrium is reached. Then, the second die is heated and all the dice temperatures are recorded. With the known ambient temperature, the die junction temperature and power dissipation, the thermal resistance can be calculated. The thermal resistance calculation can be cast in matrix form. This yields a 2-by-2 matrix for our case of two heat sources.

Figure 13: Diagram of ACPL-K49CT for Measurement

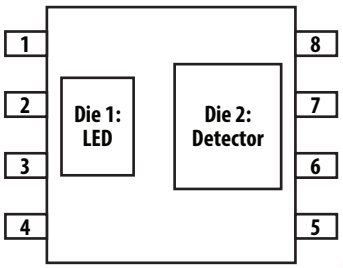

$$\begin{vmatrix} R_{11} & R_{12} \\ R_{21} & R_{22} \end{vmatrix} \times \begin{vmatrix} P_1 \\ P_2 \end{vmatrix} = \begin{vmatrix} \Delta T_1 \\ \Delta T_2 \end{vmatrix}$$

R_{11} : Thermal Resistance of Die1 due to heating of Die1 (°C/W)
R_{12} : Thermal Resistance of Die1 due to heating of Die2 (°C/W)
R_{21} : Thermal Resistance of Die2 due to heating of Die1 (°C/W)
R_{22} : Thermal Resistance of Die2 due to heating of Die2 (°C/W)

P_1 : Power dissipation of Die1 (W)
P_2 : Power dissipation of Die2 (W)

T_1 : Junction temperature of Die1 due to heat from all dice (°C)
T_2 : Junction temperature of Die2 due to heat from all dice (°C)
T_a : Ambient temperature (°C)
ΔT_1 : Temperature difference between Die1 junction and ambient (°C)
ΔT_2 : Temperature deference between Die2 junction and ambient (°C)

$T_1 = (R_{11} \times P_1 + R_{12} \times P_2) + T_a$
$T_2 = (R_{21} \times P_1 + R_{22} \times P_2) + T_a$

Measurement data on a low K (conductivity) board:

R_{11} = 160°C/W, R_{12} = R_{21} = 74°C/W, R_{22} = 115°C/W

chanhvinh.com

Copyright © 2023-2024 Broadcom. All Rights Reserved. The term “Broadcom” refers to Broadcom Inc. and/or its subsidiaries. For more information, go to www.broadcom.com. All trademarks, trade names, service marks, and logos referenced herein belong to their respective companies.

Broadcom reserves the right to make changes without further notice to any products or data herein to improve reliability, function, or design. Information furnished by Broadcom is believed to be accurate and reliable. However, Broadcom does not assume any liability arising out of the application or use of this information, nor the application or use of any product or circuit described herein, neither does it convey any license under its patent rights nor the rights of others.

BROADCOM®

Lead (Pb) Free
RoHS 6 fully compliant
RoHS 6 fully compliant options available;
-xxxE denotes a lead-free product