chanhvinh.com

BROADCOM®

Data Sheet

ACPL-K308U

Industrial Photovoltaic MOSFET Driver

Description

The Broadcom® industrial ACPL-K308U photovoltaic driver is designed to drive high voltage MOSFETs. It consists of an AlGaAs infrared light-emitting diode (LED) input stage optically coupled to an output detector circuit. The detector consists of a high-speed photovoltaic diode array and a turn-off circuit. This photovoltaic driver turns on (contact closes) with a minimum input current of 5 mA through the input LED. It turns off (contact opens) with an input voltage of 0.8V or less.

The ACPL-K308U is available in the stretched SO-8 package outline footprint with a minimum of 8 mm (clearance/creepage). It is ideal for fast turn on and turn off in inrush current prevention and insulation resistance measurement and leakage current detection.

Figure 1: Functional Diagram

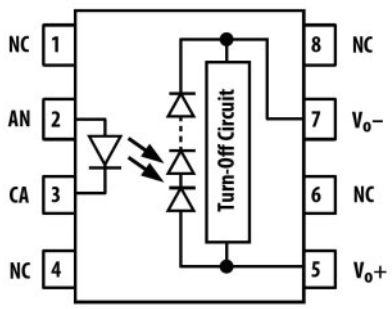

Features

- 8-mm creepage and clearance in a compact SSO-8 package
- Operating temperature range: –40°C to +125°C
- Photovoltaic driver for high-voltage MOSFETs in a solid state relay application
- Open circuit voltage: 8.2V typical at I_F = 10 mA
- Short circuit current: 70 µA typical at I_F = 10 mA
- Logic circuit compatibility
- Switching speed (typical): 50 µs (T_{ON}), 23 µs (T_{OFF}) at I_F = 10 mA, C_L = 1 nF
- Configurable to wide portfolio of high-voltage MOSFETs
- Galvanic isolation
- High input-to-output insulation voltage
- Safety and regulatory approvals
  - IEC/EN/DIN EN 60747-5-5, maximum working insulation voltage 1140 V_{PEAK}
  - 5000 Vrms for 1 minute per UL1577
  - CSA component acceptance

Applications

- Solid state relay module
- Inrush current prevention
- Insulation resistance measurement in battery system, solar PV inverters; EV charging system; motor winding insulation

chanhvinh.com

Typical Application Circuit

Figure 2: Application Circuit

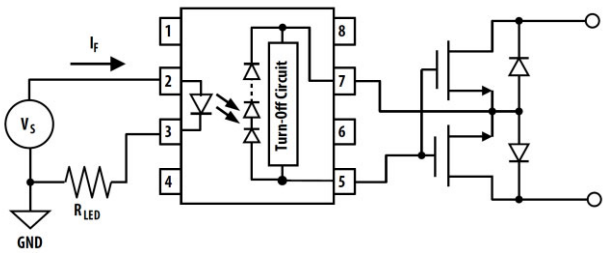

Package Pinout

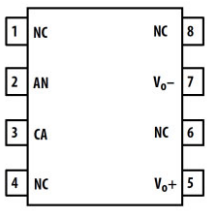

Pin Description

Pin Number	Pin Name	Description
2	AN	Anode
3	CA	Cathode
5	VO+	Positive Output
7	VO-	Negative Output
1, 4, 6, 8	NC	Not Connected

Ordering Information

Specify part number followed by option number (if desired).

Part Number	Option (RoHS Compliant)	Package	Surface Mount	Tape and Reel	UL 5000 V_{rms} / 1 Minute Rating	IEC 60747-5-5 EN/ DIN EN 60747-5-5	Quantity
ACPL-K308U	-000E	Stretched SO-8	X		X	X	80 per tube
	-500E		X	X	X	X	1000 per reel

chanhvinh.com

Package Outline Drawings (Stretched SO8)

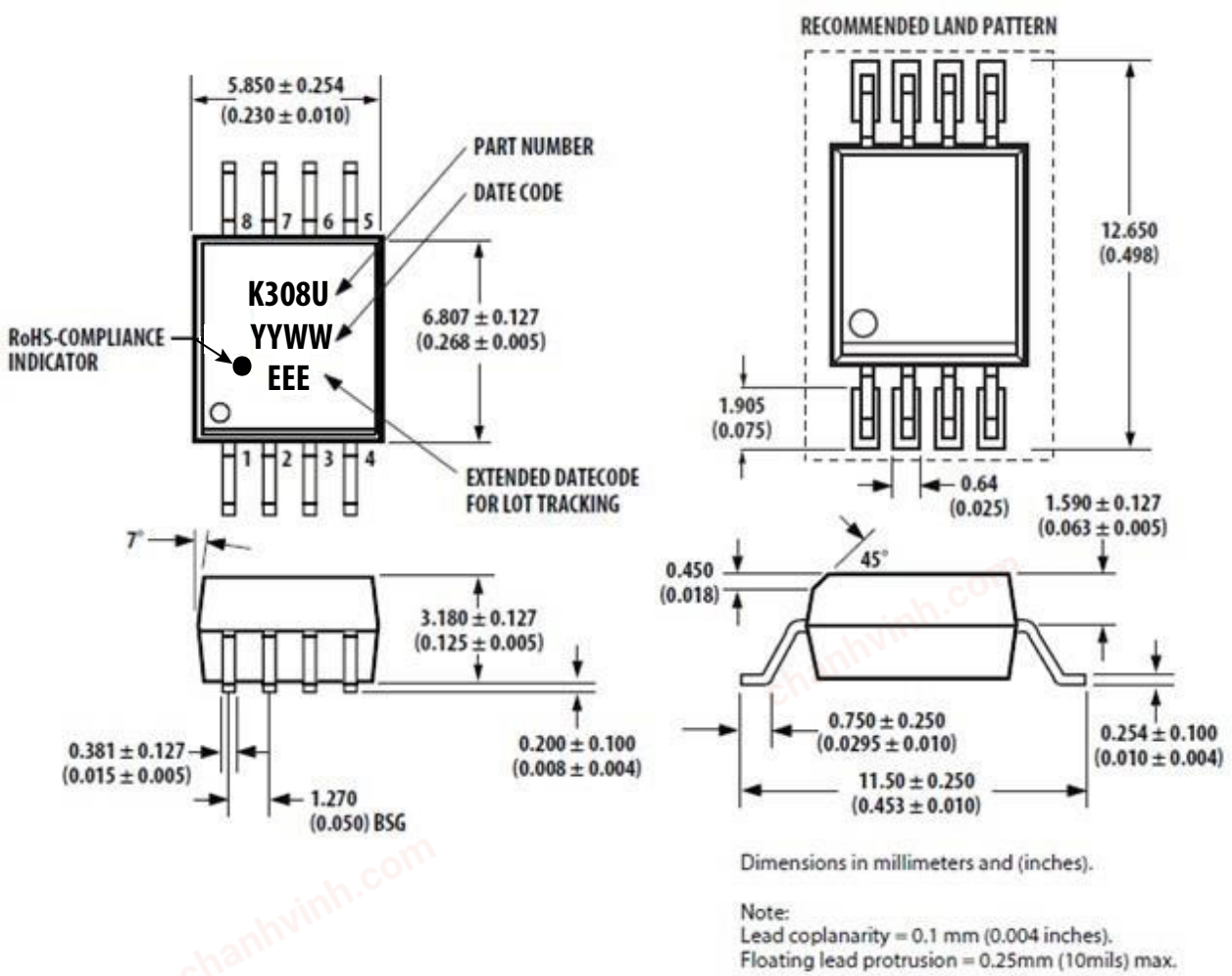

Dimensions in millimeters and (inches).

Note:
Lead coplanarity = 0.1 mm (0.004 inches).
Floating lead protrusion = 0.25mm (10mils) max.

Recommended Pb-Free IR Profile

Recommended reflow condition as per JEDEC Standard J-STD-020 (latest revision).

NOTE: Non-halide flux should be used.

Regulatory Information

The ACPL-K308U is approved by the following organizations.

UL	CSA	IEC/EN/DIN EN 60747-5-5
UL 1577, component recognition program up to VISO = 5 kV_{RMS}	Approved under CSA Component Acceptance Notice #5	EC 60747-5-5 EN 60747-5-5 DIN EN 60747-5-5

chanhvinh.com

Insulation and Safety Related Specifications

Parameter	Symbol		Units	Conditions
Minimum External Air Gap (Clearance)	L(101)	8	mm	Measured from the input terminals to the output terminals, shortest distance through the air.
Minimum External Tracking (Creepage)	L(102)	8	mm	Measured from the input terminals to the output terminals, shortest distance path along the body.
Minimum Internal Plastic Gap (Internal Clearance)		0.08	mm	Through insulation distance conductor to conductor, usually the straight line distance thickness between the emitter and the detector.
Tracking Resistance (Comparative Tracking Index)	CTI	175	V	DIN IEC 112/VDE 0303 Part 1.
Isolation Group (DIN VDE0109)		IIIa		Material Group (DIN VDE 0109).

IEC/EN/DIN EN 60747-5-5 Insulation-Related Characteristic (Options 060 and 560 Only)

Description	Symbol	Options 060 and 560	Units
Installation classification per DIN VDE 0110/1.89, Table 1			
for rated mains voltage < 600 Vrms		I - IV	
for rated mains voltage < 1000 Vrms		I - III	
Climatic Classification		40/125/21	
Pollution Degree (DIN VDE 0110/1.89)		2	
Maximum Working Insulation Voltage	V_{IORM}	1140	V_{PEAK}
Input to Output Test Voltage, Method b V_{IORM} × 1.875 = V_{PR}, 100% Production Test with t_m = 1 second, Partial Discharge < 5 pC	V_{PR}	2137	V_{PEAK}
Input to Output Test Voltage, Method a V_{IORM} × 1.6 = V_{PR}, Type and sample test, t_m = 10 seconds, Partial Discharge < 5 pC	V_{PR}	1824	V_{PEAK}
Highest Allowable Overvoltage (Transient Overvoltage, t_{ini} = 60s)	V_{IOTM}	8000	V_{PEAK}
Safety Limiting Values (Maximum values allowed in the event of a failure)			
Case Temperature	T_S	175	°C
Input Current	$I_{S,INPUT}$	230	mA
Output Power	$P_{S,OUTPUT}$	600	mW
Insulation Resistance at T_S, V_{IO} = 500V	R_S	$>10^9$	Ω

chanhvinh.com

Absolute Maximum Ratings

Parameter		Symbol	Min.	Max.	Units	Note
Storage Temperature		T_S	–55	150	°C	
Operating Ambient Temperature		T_A	–40	125	°C	
Input Current	Average	$I_{F(avg)}$	—	20	mA	
	Surge (50% duty cycle)	$I_{F(surge)}$	—	40	mA	
	Transient (≤ 1-µs pulse width, 300 pps)	$I_{F(trans)}$	—	1	A	
Reversed Input Voltage		V_R	—	6	V	
Input Power Dissipation		P_{IN}	—	30	mW	
Output Power Dissipation		P_{OUT}	—	1	mW	
Lead Soldering Cycle	Temperature		—	260	°C	
	Time		—	10	s	
Solder Reflow Temperature Profile		Recommended reflow condition as per JEDEC Standard J-STD-020 (latest revision).				

Recommended Operating Conditions

Parameter	Symbol	Min.	Max.	Units	Note
Input Current (ON)	$I_{F(ON)}$	5	10	mA	
Input Voltage (OFF)	$V_{F(OFF)}$	0	0.8	V	
Operating Temperature	T_A	–40	125	°C	

Electrical Specifications (DC)

Unless otherwise stated, all minimum/maximum specifications are over recommended operating conditions. All typical values are at T_A = 25°C.

Parameter	Symbol	Min.	Typ.	Max.	Units	Test Conditions	Figure	Note
Open Circuit Voltage	V_{OC}	5.4	8.0	—	V	I_F = 5 mA, I_O = 0 mA	3, 4	
		5.8	8.2	—		I_F = 10 mA, I_O = 0 mA	3, 4	
Temperature Coefficient of Open Circuit Voltage	$\Delta V_{OC}/\Delta T_A$	—	–18	—	mV/°C	I_F = 10 mA, I_O = 0 mA	4	
Short Circuit Current	I_{SC}	11	40	—	µA	I_F = 5 mA, V_O = 0V	5, 6	
		24	70	—		I_F = 10 mA, V_O = 0V	5, 6	
Input Forward Voltage	V_F	1.25	1.4	1.85	V	I_F = 5 mA	5, 6	
Temperature Coefficient of Forward Voltage	$\Delta V_F/\Delta T_A$	—	–1.5	—	mV/°C	I_F = 10 mA		
Input Reverse Breakdown Voltage	BV_R	6	—	—	V	I_R = 10 µA		

chanhvinh.com

Switching Specifications (AC)

Unless otherwise stated, all minimum/maximum specifications are over recommended operating conditions. All typical values are at T_A = 25°C.

Parameter	Symbol	Min.	Typ.	Max.	Units	Test Conditions	Figure	Note
Turn On Time	T_{ON}	—	100	295	µs	I_F = 5 mA, C_L = 1 nF	7, 10, 11	
		—	50	140		I_F = 10 mA, C_L = 1 nF	7, 10, 11	
Turn Off Time	T_{OFF}	—	28	45	µs	I_F = 5 mA, C_L = 1 nF	8, 9, 11	
		—	23	40		I_F = 10 mA, C_L = 1 nF	8, 9, 11	

Package Characteristics

Unless otherwise stated, all minimum/maximum specifications are over recommended operating conditions. All typical values are at T_A = 25°C.

Parameter	Symbol	Min.	Typ.	Max.	Units	Test Conditions	Figure	Note
Input-Output Momentary Withstand Voltage[a]	V_{ISO}	5000	—	—	V_{RMS}	RH ≤ 50%, t = 1 minute; T_A = 25°C		b, c
Input-Output Resistance	R_{I-O}	10^9	10^{14}	—	Ω	V_{I-O} = 500 Vdc		b
Input-Output Capacitance	C_{I-O}	—	0.6	—	pF	f = 1 MHz; V_{I-O} = 0 Vdc		b

a. The Input-Output Momentary Withstand Voltage is a dielectric voltage rating that should not be interpreted as an input-output continuous voltage rating.

b. The device is considered to be a two-terminal device: pins 1, 2, 3, and 4 shorted together, and pins 5, 6, 7, and 8 shorted together.

c. In accordance with UL 1577, each optocoupler is proof tested by applying an insulation test voltage ≥ 6000 V_{RMS} for 1 second.

Figure 3: Open Circuit Voltage vs. Input LED Current

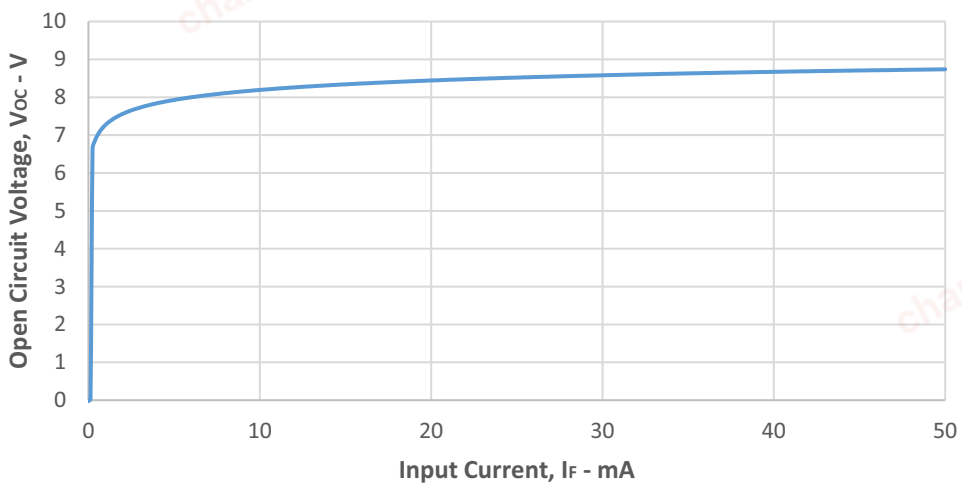

chanhvinh.com

Figure 4: Open Circuit Voltage vs. Temperature

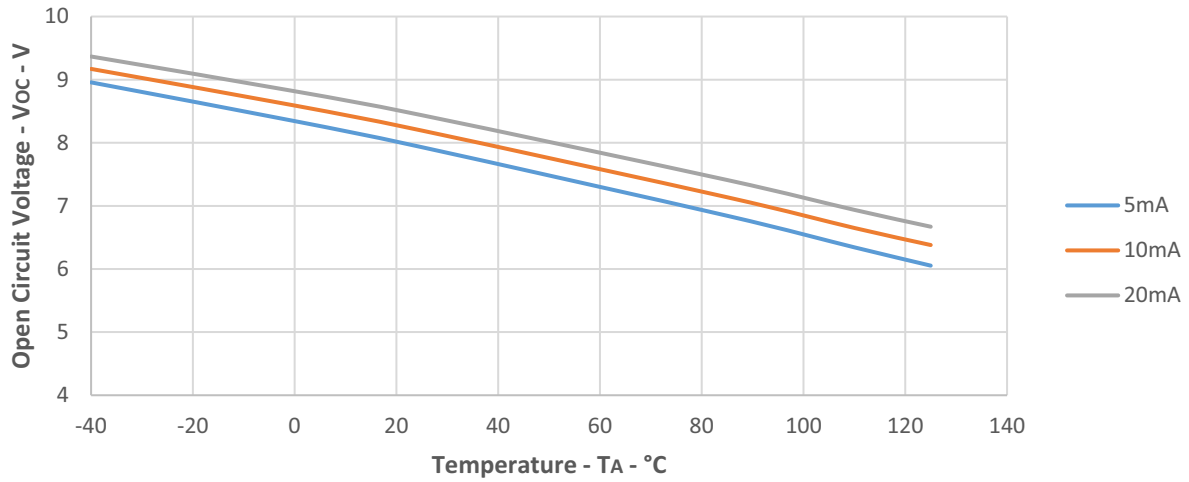

Figure 5: Short Circuit Current vs. Input LED Current

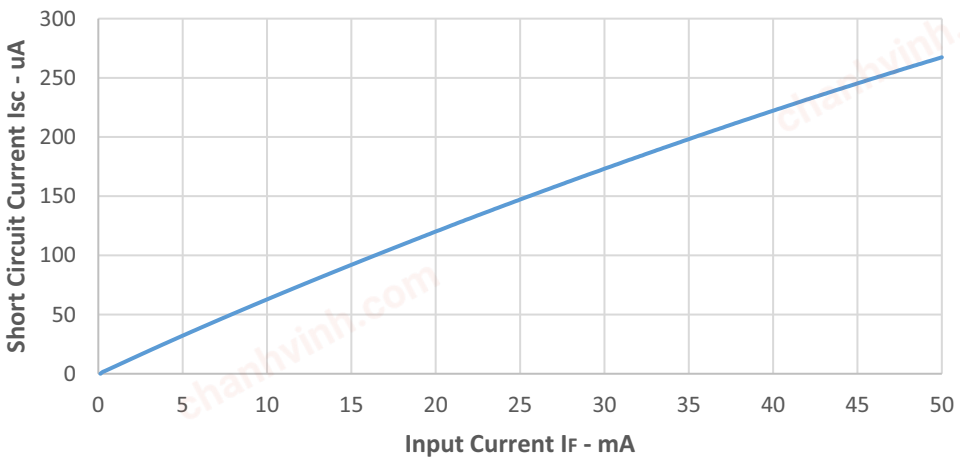

chanhvinh.com

Figure 6: Short Circuit Current vs. Temperature

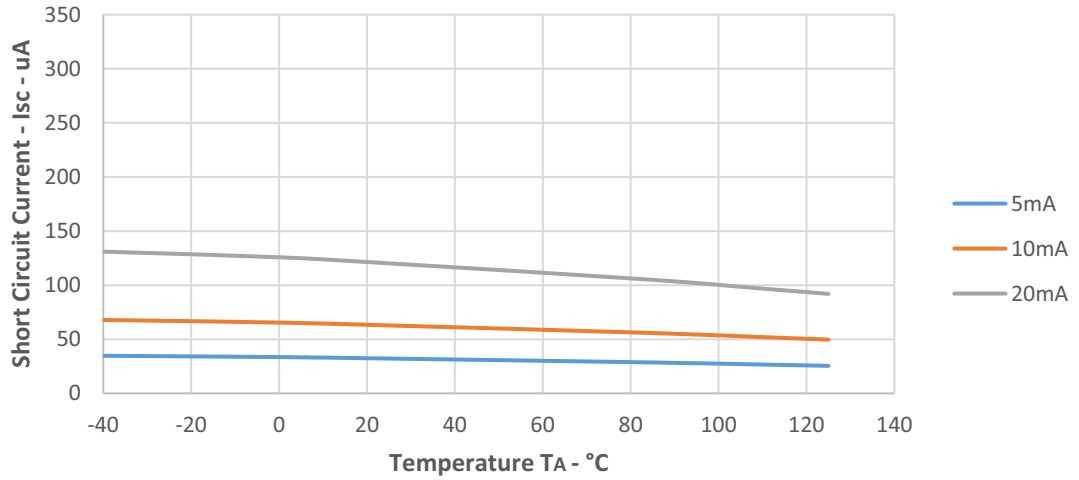

Figure 7: Turn On Time vs. Temperature

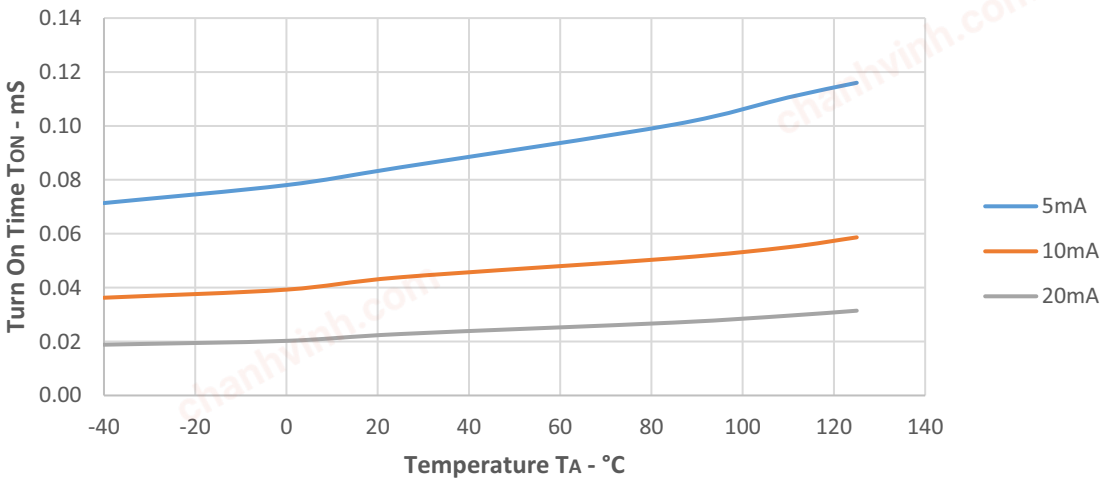

chanhvinh.com

Figure 8: Turn Off Time vs. Temperature

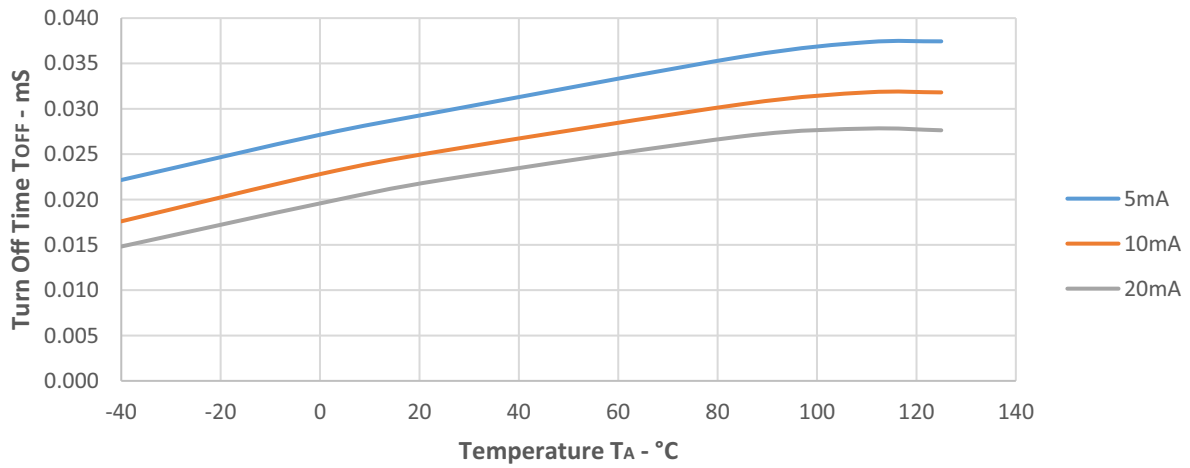

Figure 9: Turn Off Time vs. Load Capacitance

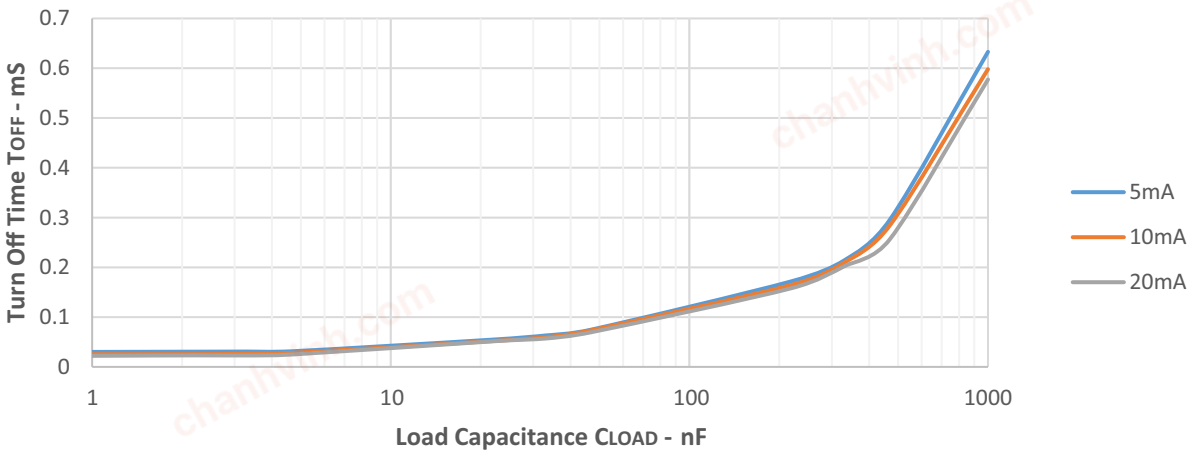

Figure 10: Turn On Time vs. Load Capacitance

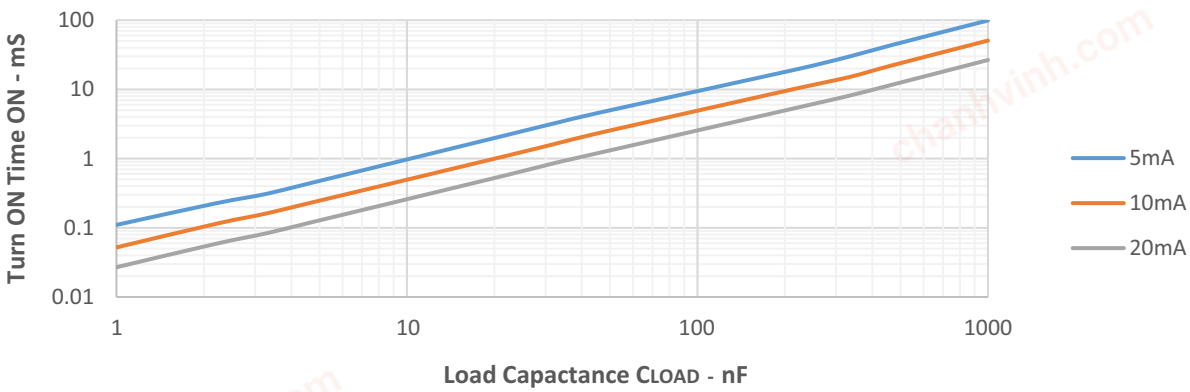

chanhvinh.com

Figure 11: Switching Time Test Circuit and Waveform

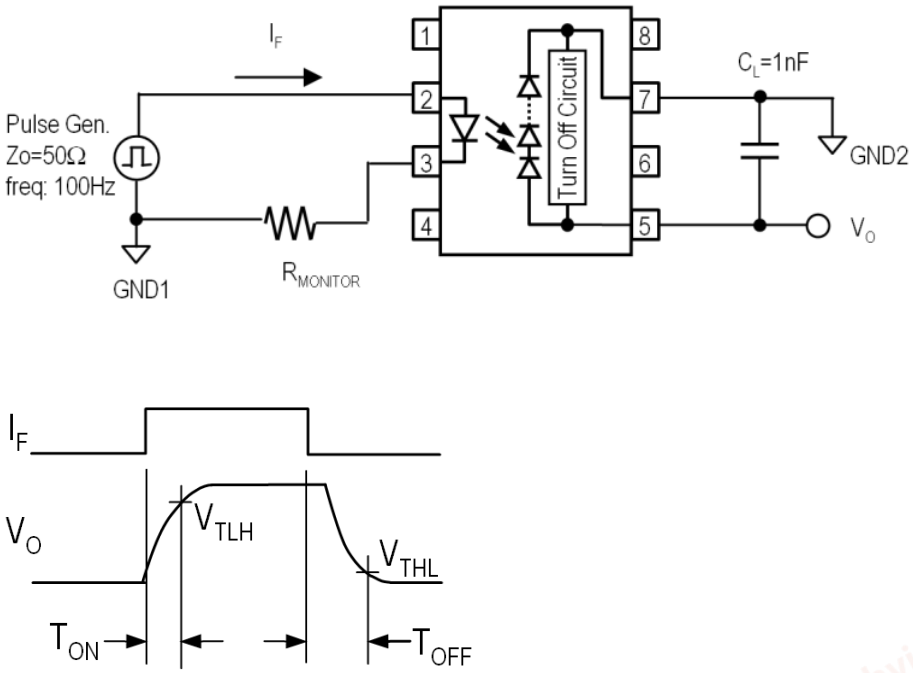

NOTE: The following are the test conditions:

- T_A = –40°C, V_{TLH} = 3.6V, V_{THL} = 1.2V
- T_A = 25°C, V_{TLH} = 3.6V, V_{THL} = 1.0V
- T_A = 125°C, V_{TLH} = 3.6V, V_{THL} = 0.8V

chanhvinh.com

Application Information

The ACPL-K308U industrial photovoltaic (PV) driver is a device that is paired with MOSFETs to form basic building block of several types of application. It consists of an AlGaAs LED input that is optically coupled to a photovoltaic diode array. This becomes a voltage source with galvanic isolation. The advantage of photovoltaic driver is its simple design that does not require bias supply.

Basic Construction

As shown in Figure 12, the input side of the PV driver is LED driven. A current limiting resistor is required to limit the current through the LED. Recommended input forward current is 5 mA to 10 mA. The LED is optically coupled through a photodiode stack (D1 to D12) consisting of 12 photodiodes connected in series. When current is driven into the light-emitting diode (LED) on the input side, the light from the LED generates photo current on the string of photodiodes to charge the gate of the MOSFETs, generating a photo-voltage proportional to the number of photodiodes, to switch and keep the power device on.

Figure 12: Basic Construction of Photovoltaic Driver

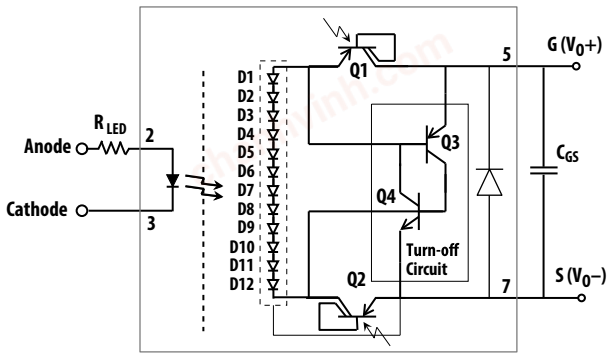

PV Driver and MOSFET Configurations

The photovoltaic driver is a device that is combined with high voltage MOSFETs to form a solid-state relay. The photovoltaic driver can be configured with a single MOSFET or two MOSFETS (back-to-back) for bidirectional application. Pin 5 is connected to the Gate, and Pin 7 is connected to the Source. Figure 13 and Figure 14 are sample application circuits for the two configurations.

Turn-Off Circuit

The photovoltaic driver has a built in turn-off circuit, which decreases the turn-off time. This circuit instantaneously discharges the gate capacitance of MOSFETs when the photovoltaic driver is turned off. The turn-off circuit is activated when the photovoltaic voltage is collapsing.

The sequence of operation of the turn-off circuit:

When LED is ON:

1. Q1 and Q2 are saturated.
2. SCR (Q3 and Q4) is disabled.
3. Photodiode array is connected to Gate and Source.

When LED is OFF:

1. Q1 and Q2 cease to conduct.
2. Photodiode array is disconnected from Gate and Source.
3. SCR (Q3 and Q4) is triggered and Gate capacitance (CGS) is discharged rapidly.

Figure 13: Photovoltaic Driver + Single External MOSFET

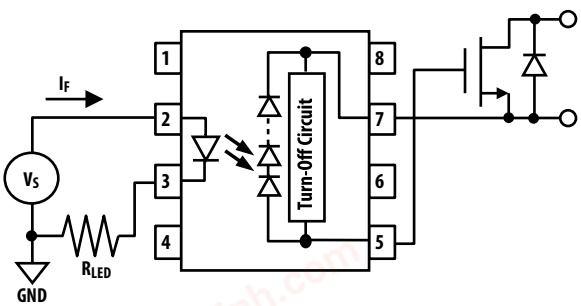

Figure 14: Photovoltaic Driver + Two Back-to-Back MOSFETs

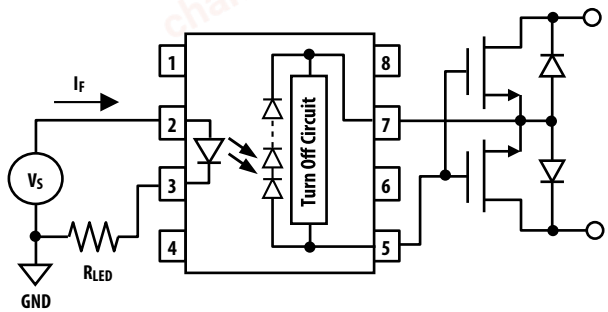

chanhvinh.com

V_{OC} and MOSFET $V_{GS(TH)}$

ACPL-K308U has typical V_{OC} of 8.2V and minimum V_{OC} of 5.8V at 125°C. This is sufficient to drive most logic gate level MOSFETs, with threshold voltages $V_{GS(TH)}$ of 4V or less. The V_{OC} has a typical temperature coefficient of –18 mV/°C. To serve as a guide in the design at different temperatures, Figure 15 shows the ACPL-K308U's minimum V_{OC} vs. the MOSFET's maximum $V_{GS(TH)}$.

Figure 15: V_{OC} Minimum vs. MOSFET $V_{GS(TH)}$ Maximum

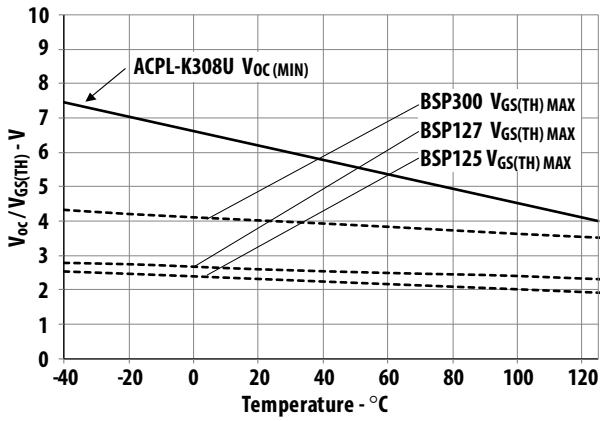

Two PV Drivers in Series

For high-voltage MOSFETs that require higher $V_{GS(TH)}$, two ACPL-K308U devices can be connected in series. Figure 16 shows the connection for this configuration. Two PV drivers in series will give 2× higher V_{OC} (Typical = 16V) compared with a single PV driver.

Figure 16: Two PV Drivers in Series

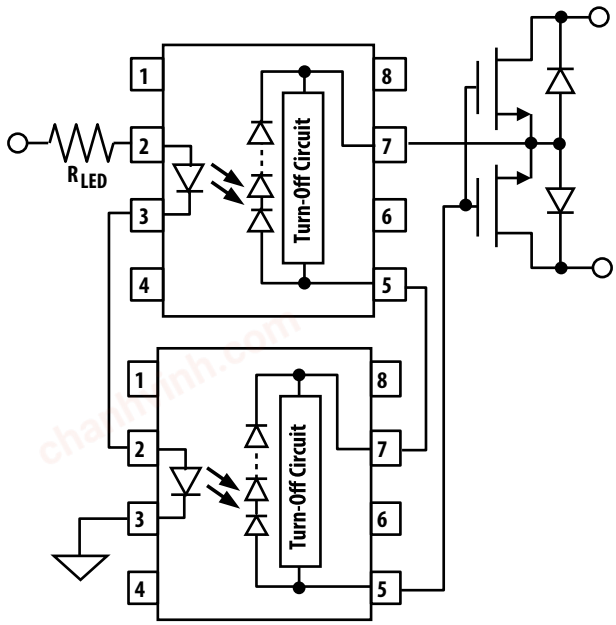

chanhvinh.com

Thermal Resistance Model for ACPL-K308U

The diagram of ACPL-K308U for measurement is shown in Figure 17. Here, one die is heated first and the temperatures of all the dice are recorded after thermal equilibrium is reached. Then, the second die is heated and all the dice temperatures are recorded. With the known ambient temperature, the die junction temperature and power dissipation, the thermal resistance can be calculated. The thermal resistance calculation can be cast in matrix form. This yields a 2 by 2 matrix for our case of two heat sources.

$$\begin{vmatrix} R_{11} & R_{12} \\ R_{21} & R_{22} \end{vmatrix} \bullet \begin{vmatrix} P_1 \\ P_2 \end{vmatrix} = \begin{vmatrix} \Delta T_1 \\ \Delta T_2 \end{vmatrix}$$

Figure 17: Diagram of ACPL-K308U for Measurement

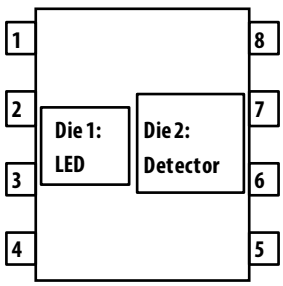

R_{11}: Thermal Resistance of Die1 due to heating of Die1
R_{12}: Thermal Resistance of Die1 due to heating of Die2.
R_{21}: Thermal Resistance of Die2 due to heating of Die1.
R_{22}: Thermal Resistance of Die2 due to heating of Die2.
P_1: Power dissipation of Die1 (W).
P_2: Power dissipation of Die2 (W).
T_1: Junction temperature of Die1 due to heat from all dice (°C).
T_2: Junction temperature of Die2 due to heat from all dice.
T_A: Ambient temperature.
ΔT_1: Temperature difference between Die1 junction and ambient (°C).
ΔT_2: Temperature deference between Die2 junction and ambient (°C).

$T_1 = R_{11} \times P_1 + R_{12} \times P_2 + T_A$
$T_2 = R_{21} \times P_1 + R_{22} \times P_2 + T_A$

Measurement data on a low K (connectivity) board:

R_{11} = 258°C/W
R_{12}= 121°C/W
R_{21} = 119°C/W
R_{22} = 201°C/W

Measurement data on a high K (connectivity) board:

R_{11} = 194°C/W
R_{12}= 59°C/W
R_{21} = 53°C/W
R_{22} = 136°C/W

chanhvinh.com

Broadcom, the pulse logo, Connecting everything, Avago Technologies, Avago, and the A logo are among the trademarks of Broadcom and/or its affiliates in the United States, certain other countries, and/or the EU.

Copyright © 2014–2021 Broadcom. All Rights Reserved.

The term “Broadcom” refers to Broadcom Inc. and/or its subsidiaries. For more information, please visit www.broadcom.com.

Broadcom reserves the right to make changes without further notice to any products or data herein to improve reliability, function, or design. Information furnished by Broadcom is believed to be accurate and reliable. However, Broadcom does not assume any liability arising out of the application or use of this information, nor the application or use of any product or circuit described herein, neither does it convey any license under its patent rights nor the rights of others.

BROADCOM®

Lead (Pb) Free
RoHS 6 fully compliant
RoHS 6 fully compliant options available;
-xxxE denotes a lead-free product