chanhvinh.com

BROADCOM®

Data Sheet

ACPL-K305T

Automotive Photovoltaic Driver with R²Coupler™ Isolation

Overview

The Broadcom® ACPL-K305T photovoltaic driver is specifically designed to drive high voltage MOSFETs and/or IGBTs. It consists of an AlGaAs infrared light emitting diode (LED) input stage optically coupled to an output detector circuit. The detector consists of a photovoltaic diode array and a turn-off circuit. The photovoltaic driver is turned on with a minimum input current of 3 mA through the input LED. The MOSFET driver is turned off with an input voltage of 0.6V or less. This becomes a voltage source with galvanic isolation. The advantage of a photovoltaic driver is its simple design that does not require secondary side bias supply.

The ACPL-K305T is available in the stretched SO-8 package outline, designed to be compatible with standard surface-mount processes.

Broadcom R²Coupler™ isolation products provide reinforced insulation and reliability that delivers safe signal isolation critical in automotive and high temperature industrial applications.

Features

- Qualified to AEC-Q100 test guidelines
- Automotive temperature range: –40°C to +125°C
- Drive external power MOSFET/IGBT without isolated secondary supply
- Low I_F drive of 3 mA
- Open-circuit voltage: 7.1V typical at I_F = 10 mA
- Short-circuit current: 59 µA typical at I_F = 10 mA
- Fast switching speed for I_F = 10 mA, C_L = 1 nF:
  - Turn-on time: 0.07 ms typical
  - Turn-off time: 0.02 ms typical
- Regulatory approvals:
  - UL/cUL 1577 5 kV_{RMS} for 1 minute
  - IEC/EN 60747-5-5 V_{IORM} = 1260 V_{PEAK}

Applications

- Solid-state relay
- High-side power switch control
- Battery management system
- Precharge/active discharge circuit in high voltage system

CAUTION!

Take normal static precautions in the handling and assembly of this component to prevent damage and degradation that might be induced by electrostatic discharge (ESD). The components featured in this data sheet are not recommended to be used in military or aerospace applications or environments.

chanhvinh.com

Functional Diagram

Figure 1: ACPL-K305T Functional Diagram

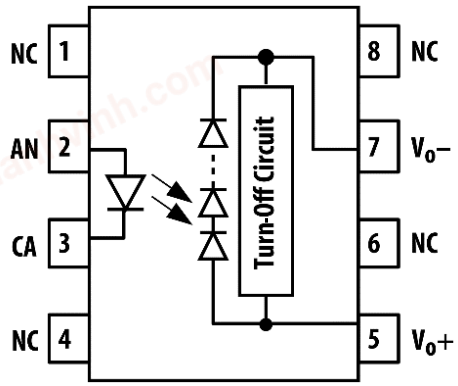

Typical Application Circuit

Figure 2: Application Circuit

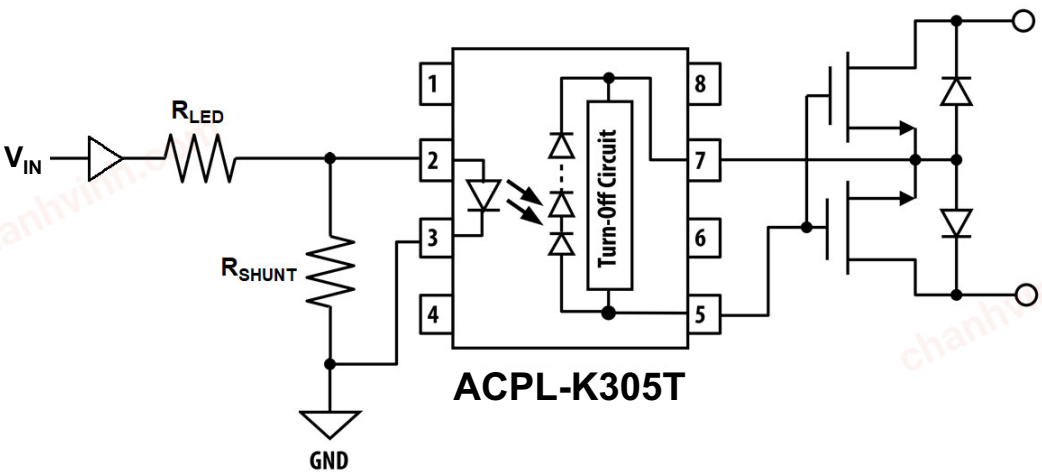

chanhvinh.com

Package Pinout

Figure 3: ACPL_K305T Pinout

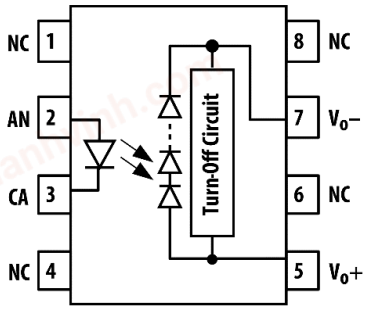

Pin Description

Pin Number	Name	Function
1, 4, 6, 8	NC	No internal connection
2	AN	Anode
3	CA	Cathode
5	VO+	Positive output
7	VO–	Negative output

Ordering Information

Part Number	Option (RoHS Compliant)	Package	Surface Mount	Tape and Reel	UL 5000 V_{RMS}/ 1 Minute Rating	IEC/EN 60747-5-5	Quantity
ACPL-K305T	-000E	Stretched SO-8	X		X		80 per tube
	-060E		X		X	X	80 per tube
	-500E		X	X	X		1000 per reel
	-560E		X	X	X	X	1000 per reel

To order, choose a part number from the part number column and combine with the desired option from the option column to form an order entry.

Example:

ACPL-K305T-560E to order product of Stretched SO8 Surface-Mount package in Tape and Reel packaging with IEC/EN 60747-5-5 Safety Approval in RoHS compliant.

Packaging option data sheets are available. Contact your Broadcom sales representative or authorized distributor for information.

chanhvinh.com

Package Outline Drawing

Figure 4: Stretched SO-8 Package

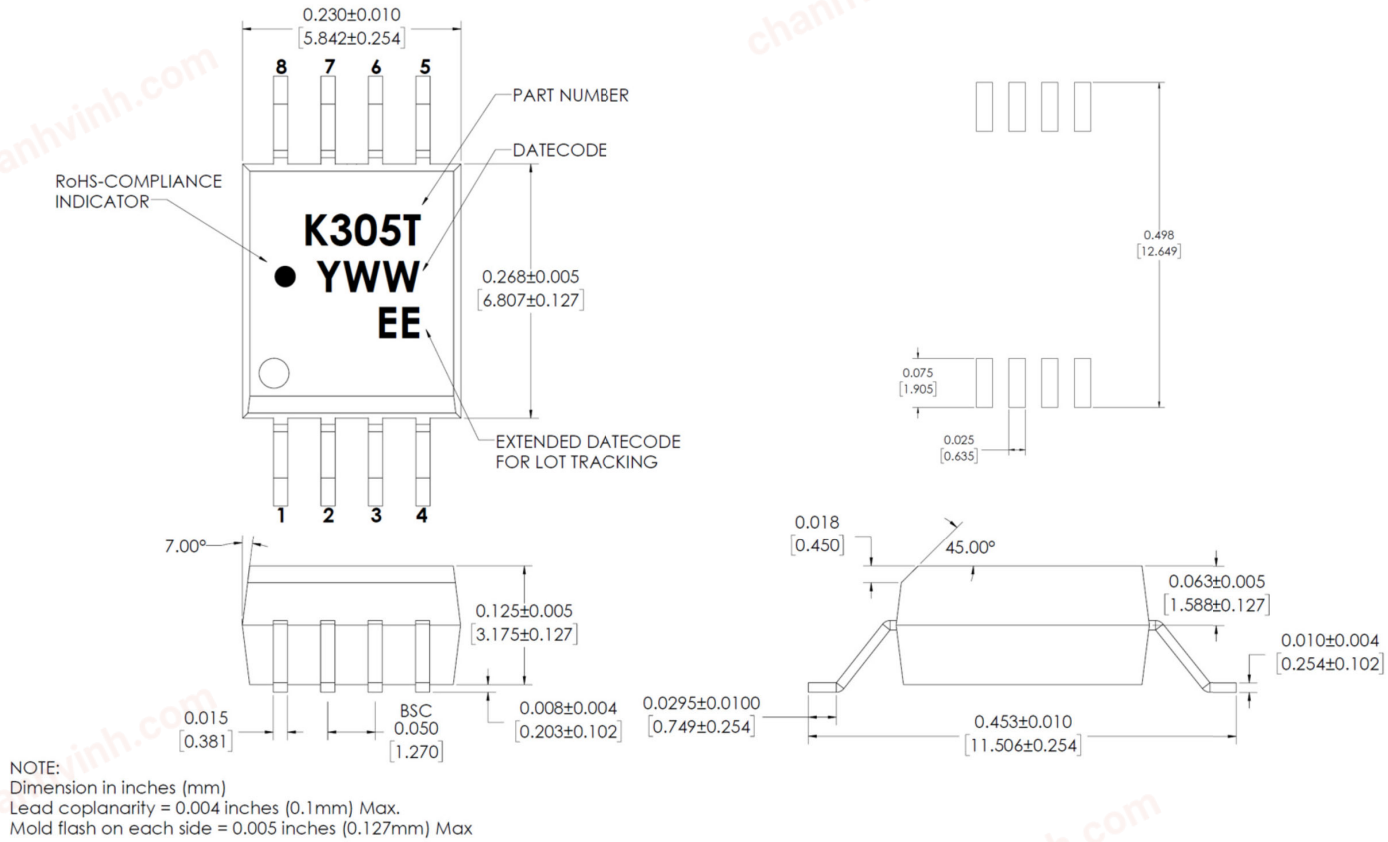

NOTE:
Dimension in inches (mm)
Lead coplanarity = 0.004 inches (0.1mm) Max.
Mold flash on each side = 0.005 inches (0.127mm) Max

Recommended Pb-Free IR Profile

Recommended reflow condition as per JEDEC Standard, J-STD-020 (latest revision).

NOTE: Non-halide flux should be used.

Regulatory Information

The ACPL-K305T is approved by the following organizations.

UL/cUL	IEC/EN 60747-5-5
UL 1577, component recognition program up to V_{ISO} = 5000 V_{RMS}	V_{IORM} = 1260 V_{PEAK} V_{IOTM} = 8000 V_{PEAK}

chanhvinh.com

IEC/EN 60747-5-5 Insulation Characteristics

Description	Symbol	Characteristic	Unit
Installation Classification per DIN VDE 0110/1.89, Table 1 For Rated Mains Voltage < 600 V_{RMS}		 I – IV	
Climatic Classification		40/125/21	
Pollution Degree (DIN VDE 0110/1.89)		2	
Maximum Working Insulation Voltage	V_{IORM}	1260	V_{PEAK}
Input to Output Test Voltage, Method b V_{IORM} × 1.875 = V_{PR}, 100% Production Test with t_m = 1s, Partial Discharge < 5 pC	V_{PR}	2362	V_{PEAK}
Input to Output Test Voltage, Method a V_{IORM} × 1.6 = V_{PR}, Type and Sample Test, t_m = 10s, Partial Discharge < 5 pC	V_{PR}	2016	V_{PEAK}
Highest Allowable Overvoltage (Transient Overvoltage t_{ini} = 60s)	V_{IOTM}	8000	V_{PEAK}
Safety-Limiting Values (Maximum values allowed in the event of a failure) Case Temperature Input Current Output Power	 T_S $I_{S,INPUT}$ $P_{S,OUTPUT}$	 175 230 600	 °C mA mW
Insulation Resistance at T_S, V_{IO} = 500V	R_S	$>10^9$	Ω

Insulation and Safety Related Specifications

Parameter	Symbol		Unit	Conditions
Minimum External Air Gap (Clearance)	L(101)	8	mm	Measured from the input terminals to the output terminals, shortest distance through the air.
Minimum External Tracking (Creepage)	L(102)	8	mm	Measured from the input terminals to the output terminals, shortest distance path along the body.
Minimum Internal Plastic Gap (Internal Clearance)		0.08	mm	The shortest straight line distance through insulation between conductor to conductor.
Tracking Resistance (Comparative Tracking Index)	CTI	>600	V	DIN IEC 112/VDE 0303 Part 1.
Isolation Group		I		Material Group (DIN VDE 0110)

ESD Ratings

Parameter	Classification	Note
Human Body Model	2	Per AEC Q100-002-Rev-E
Charged Device Model	C2a	Per AEC Q100-011-Rev-D

chanhvinh.com

Absolute Maximum Ratings

Parameter	Symbol	Min.	Max.	Unit	Note
Storage Temperature	T_S	–55	150	°C	
Operating Temperature	T_A	–40	125	°C	
IC Junction Temperature	T_J	—	150	°C	
Input Current - Average	$I_{F(AVG)}$	—	30	mA	
Input Current - Surge	$I_{F(SURGE)}$	—	40	mA	a
Reverse Input Voltage ($V_{CA} – V_{AN}$)	V_R	—	6	V	
Output Current - Average	$I_{O(AVG)}$	—	1.3	mA	
Output Current - Surge	$I_{O(SURGE)}$	—	5	mA	
Input Power Dissipation	P_{IN}	—	100	mW	b
Output Power Dissipation	P_{OUT}	—	20	mW	

a. At 50% duty cycle.

b. At 20% duty cycle.

Recommended Operating Conditions

Parameter	Symbol	Min.	Max.	Unit	Note
Operating Temperature	T_A	–40	125	°C	
Input Current (ON)	$I_{F(ON)}$	3	20	mA	
Input Voltage (OFF) ($V_{AN} – V_{CA}$)	$V_{F(OFF)}$	–5.5	0.6	V	

chanhvinh.com

Electrical Specifications (DC)

Unless otherwise specified, all minimum and maximum specifications are at recommended operating conditions. All typical values at T_A = 25°C.

Parameter	Symbol	Min.	Typ.	Max.	Unit	Test Conditions	Fig.	Notes
LED Forward Voltage ($V_{AN} - V_{CA}$)	V_F	1.1	1.5	1.8	V	I_F = 10 mA		
Temperature Coefficient of LED Forward Voltage	$\Delta V_F/\Delta T_A$	—	–1.5	—	mV/°C	I_F = 10 mA		
LED Reverse Breakdown Voltage ($V_{CA} - V_{AN}$)	V_{BR}	6	—	—	V	I_F = 10 µA		
LED Input Capacitance	C_{IN}	—	7	—	pF			
Output Clamp Voltage	V_{OCLAMP}	—	—	2	V	V_F = 0.6V, I_O = 5 mA	5	
Open-Circuit Voltage	V_{OC}	4.3	6.7	—	V	I_F = 3 mA	6,7	
		4.8	7.1	—	V	I_F = 10 mA	6,7	
		5.1	7.3	—	V	I_F = 20 mA	6,7	
		5.2	7.4	—	V	I_F = 30 mA, 100 ms pulse	6,7	
Temperature Coefficient of Open-Circuit Voltage	$\Delta V_{OC}/\Delta T_A$	—	–18	—	mV/°C	I_F = 10 mA		
Short-Circuit Current	I_{SC}	6.5	19	—	µA	I_F = 3 mA	8,9	
		24	59	—	µA	I_F = 10 mA	8,9	
		40	107	—	µA	I_F = 20 mA	8,9	
		55	146	—	µA	I_F = 30 mA, 100 ms pulse	8,9	

Switching Specifications (AC)

Unless otherwise specified, all minimum and maximum specifications are at recommended operating conditions. All typical values at T_A = 25°C.

Parameter	Symbol	Min.	Typ.	Max.	Unit	Test Conditions	Fig.	Notes
Turn-On Time	t_{ON}	—	365	1350	µs	I_F = 3 mA, C_L = 1 nF	10,12,14	
		—	70	335	µs	I_F = 10 mA, C_L = 1 nF	10,12,14	
		—	65	200	µs	I_F = 20 mA, C_L = 1 nF	10,12,14	
Turn-Off Time	t_{OFF}	—	35	60	µs	I_F = 3 mA, C_L = 1 nF	11,13,14	
		—	22	45	µs	I_F = 10 mA, C_L = 1 nF	11,13,14	
		—	20	35	µs	I_F = 20 mA, C_L = 1 nF	11,13,14	

chanhvinh.com

Package Characteristics

Unless otherwise stated, all minimum and maximum specifications are over recommended operating conditions. All typical values are at T_A = 25°C.

Parameter	Symbol	Min.	Typ.	Max.	Unit	Test Conditions	Note
Input-Output Momentary Withstand Voltage[a]	V_{ISO}	5000	—	—	V_{RMS}	RH < 50%, t = 1 minute, T_A = 25°C	b,c
Resistance (Input-Output)	R_{I-O}	—	10^{12}	—	Ω	V_{I-O} = 500 V_{DC}	
Capacitance (Input-Output)	C_{I-O}	—	1	—	pF	f = 1 MHz	

a. The input-output momentary withstand voltage is a dielectric voltage rating that should not be interpreted as an input-output continuous voltage rating.

b. The device is considered to be a two-terminal device: pins 1, 2, 3, and 4 are shorted together, and pins 5, 6, 7, and 8 are shorted together.

c. In accordance with UL 1577, each optocoupler is proof-tested by applying an insulation test voltage > 6000 V_{RMS} for 1 second.

chanhvinh.com

Typical Characteristics Plots and Test Conditions

Unless otherwise stated, all typical values are at T_A = 25°C.

Figure 5: Clamp Voltage vs. Operating Temperature

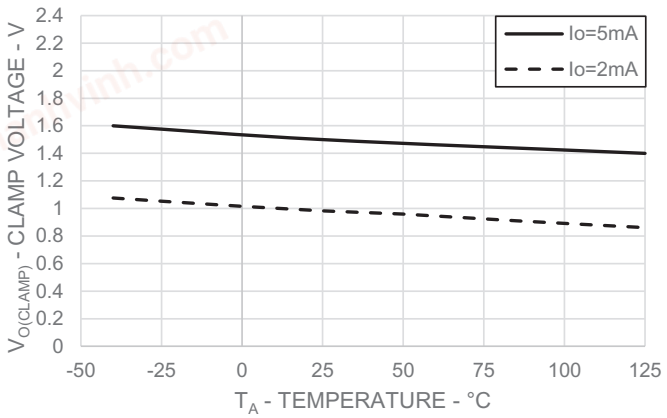

Figure 6: Open-Circuit Voltage vs. Input Current

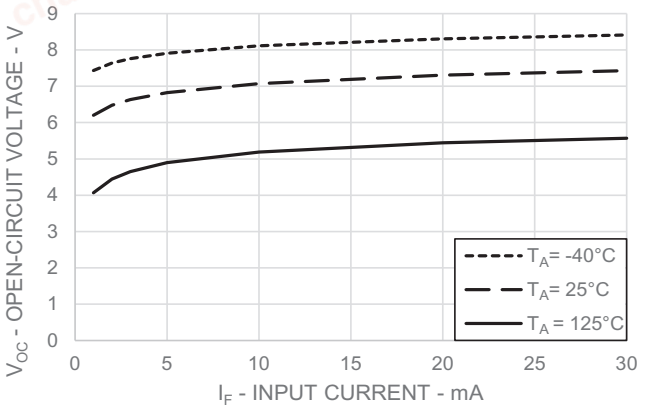

Figure 7: Open-Circuit Voltage vs. Operating Temperature

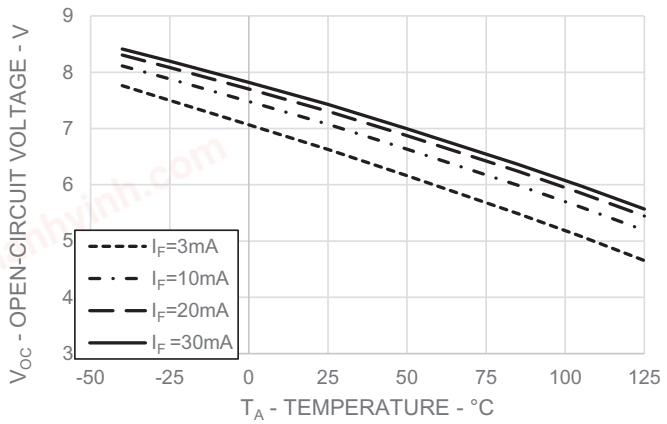

Figure 8: Short-Circuit Current vs. Input Current

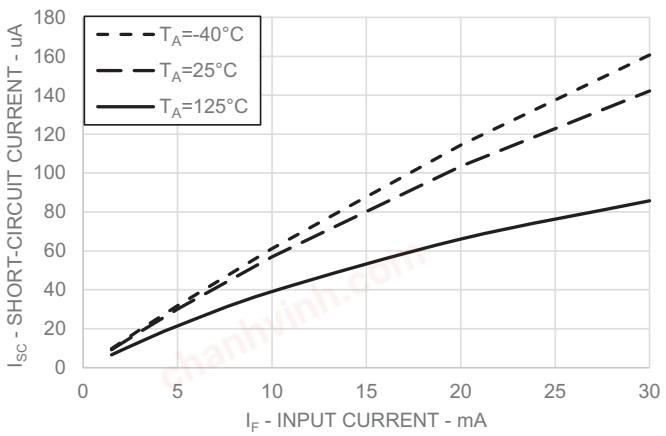

Figure 9: Short-Circuit Current vs. Operating Temperature

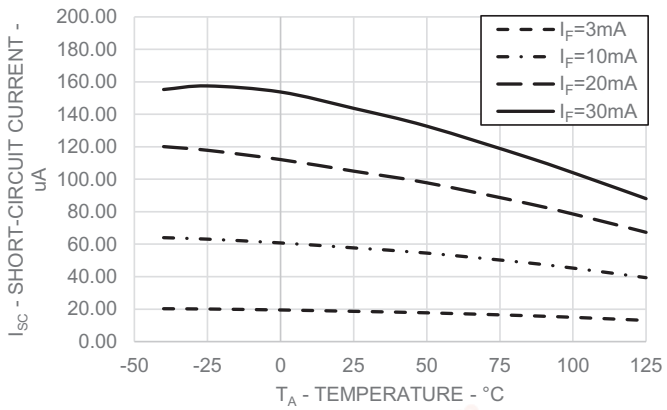

chanhvinh.com

Figure 10: Turn-On Time vs. Load Capacitance

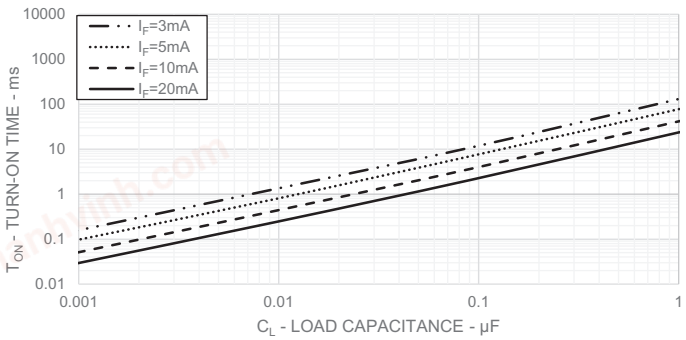

Figure 11: Turn-Off Time vs. Load Capacitance

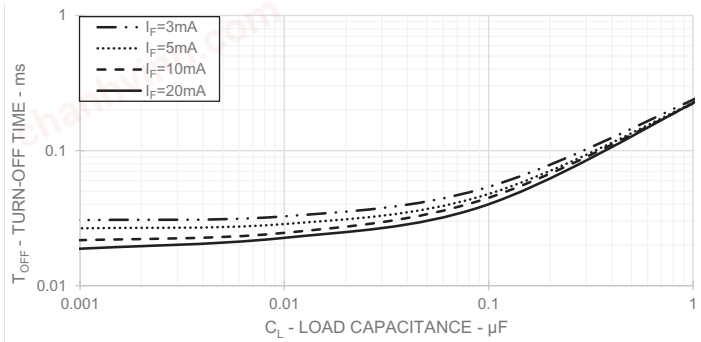

Figure 12: Turn-On Time vs. Operating Temperature (at CL = 1 nF)

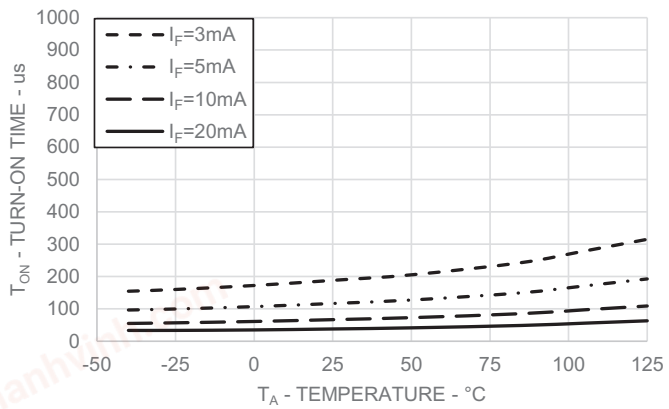

Figure 13: Turn-Off Time vs. Operating Temperature (at CL = 1 nF)

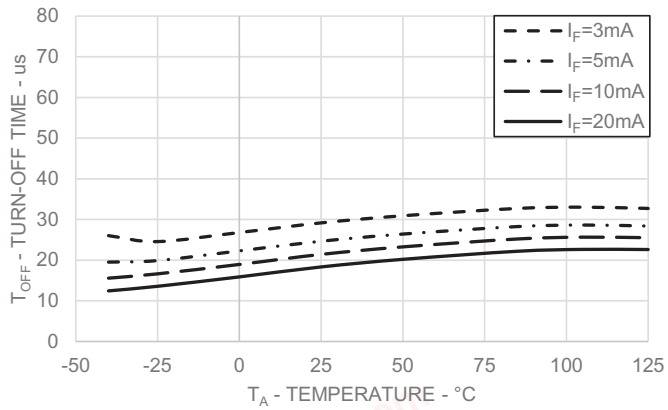

Figure 14: Switching Time Test Circuit and Waveform

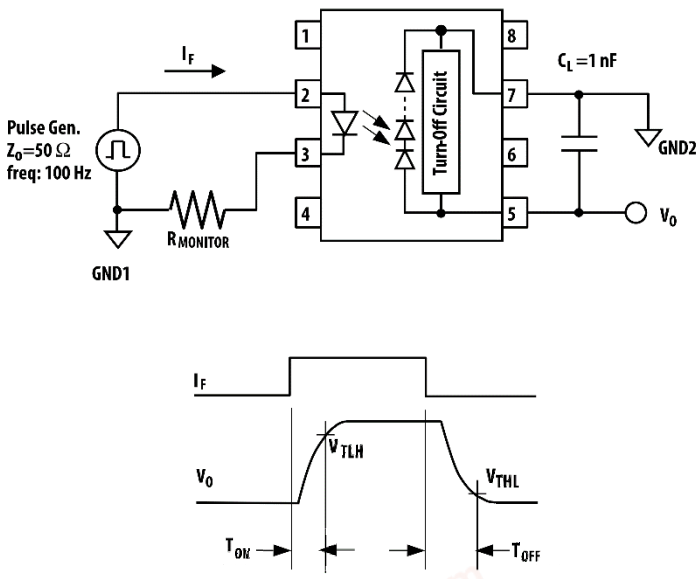

NOTE: The following are the test conditions:

- T_A = –40°C, V_{TLH} = 3.6V, V_{THL} = 1V
- T_A = 25°C, V_{TLH} = 3.6V, V_{THL} = 1V
- T_A = 125°C, V_{TLH} = 3.6V, V_{THL} = 1V

chanhvinh.com

Application Information

The ACPL-K305T automotive photovoltaic (PV) driver is a device that is paired with MOSFETs to form a basic building block of several types of application. A solid-state relay is formed using a photovoltaic driver combined with one or two MOSFETs. When combined with two back-to-back MOSFETs, the combination forms a bidirectional switch. It consists of an AlGaAs LED input that is optically coupled to a photovoltaic diode array. This becomes a voltage source with galvanic isolation. The advantage of a photovoltaic driver is its simple design that does not require secondary side bias supply.

Basic Construction

As shown in Figure 15, the input side of the PV driver is LED driven. A current-limiting resistor is required to limit the current through the LED. Recommended input forward current is 3 mA to 20 mA. The LED is optically coupled through a photodiode stack consisting photodiodes connected in series. When current is driven into the light-emitting diode (LED) on the input side, the light from the LED generates photo current on the string of photodiodes to charge the gate of the MOSFETs, generating a photo-voltage proportional to the number of photodiodes, to switch and keep the power device on.

Figure 15: Basic Construction of Photovoltaic Driver

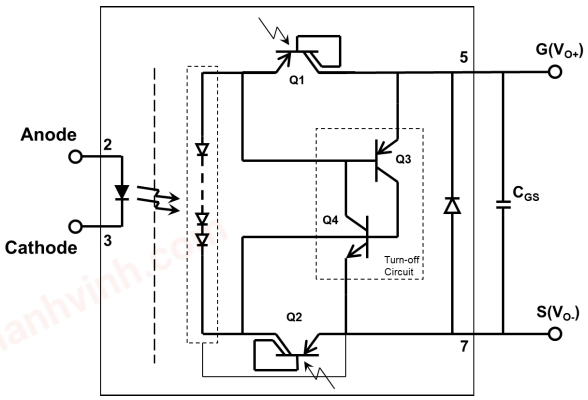

Input Drive Circuit

As shown in Figure 16, the current limiting resistor R_{LED} sets the input driving current (I_F) and it can be calculated by:

$$R_{LED} = \frac{V_{IN} - V_F}{I_F}$$

Where V_{IN} is the input voltage, V_F is the forward voltage of the LED, and the desired input current is I_F.

In order to prevent accidental turning-on of the LED due to leakage current in the input, it is recommended to have a definite threshold input current for the LED. This threshold adjustment can be obtained by shunting the LED by a resistor (R_{SHUNT}), the value of which is determined by a ratio between the Input Threshold Current (I_{FT}) and Maximum Input LED Turn-Off Voltage ($V_{F(OFF)MAX}$). The circuit in Figure 16 shows the relationship between these values. The calculations will determine the shunt resistor value required for a given I_{FT} and $V_{F(OFF)MAX}$. In the following example, the maximum LED turn-off voltage is 0.6V (specified in Recommended Operating Conditions) and the input threshold current is set to 100 µA. The required shunt resistor value is approximately 6 kΩ. In this example, when the LED is ON, a current value greater than 250 µA will flow through the shunt resistor.

chanhvinh.com

Figure 16: Circuit Diagram

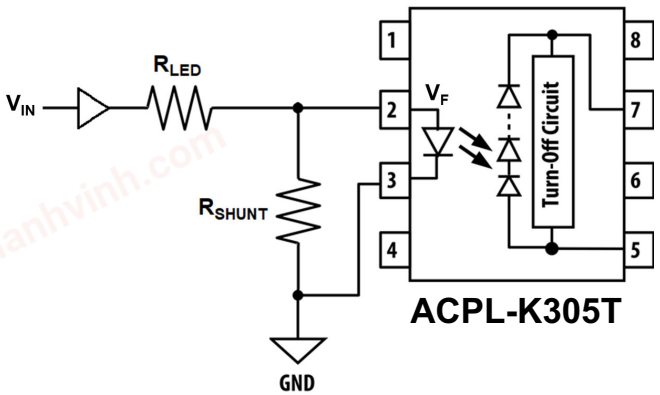

$$R_{SHUNT} = \frac{V_{F(OFF)MAX}}{I_{FT}}$$

$$= \frac{0.6V}{100\ \mu A}$$

$$R_{SHUNT} = 6\ k\Omega$$

NOTE: The recommended R_{SHUNT} value is approximately 6 kΩ.

Turn-Off Circuit

The photovoltaic driver has a built-in turn-off circuit, which decreases the turn-off time. This circuit instantaneously discharges the gate capacitance of MOSFETs once the photovoltaic driver is turned off. The turn-off circuit is activated when the photovoltaic voltage is collapsing. Referring to Figure 15, the sequence of operation for the turn-off circuit is as follows:

When the LED is ON:

1. Q1 and Q2 are saturated.
2. SCR (Q3 and Q4) is disabled.
3. Photodiode array is connected to Gate and Source.

When the LED is OFF:

1. Q1 and Q2 cease to conduct.
2. Photodiode array is disconnected from Gate and Source.
3. SCR (Q3 and Q4) is triggered and gate capacitance (CGS) is discharged rapidly.

chanhvinh.com

PV Driver and MOSFET Configurations

The photovoltaic driver is a device that is combined with high voltage MOSFETs to form a solid-state relay. The photovoltaic driver can be configured with a single MOSFET or two MOSFETS (back-to-back) for bidirectional application. Pin 5 is connected to the Gate and pin 7 is connected to the Source. Figure 17, 18 and 19 are sample application circuits for different combination.

Figure 17: Photovoltaic Driver + Single External MOSFET

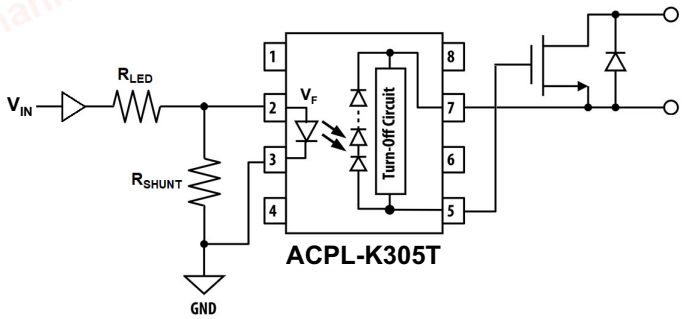

Figure 18: Photovoltaic Driver + Two Back-To-Back MOSFET

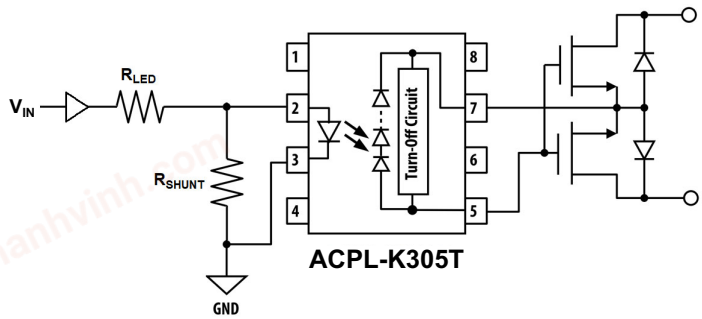

Figure 19: Two Photovoltaic Drivers in Series + Two Back-To-Back MOSFET

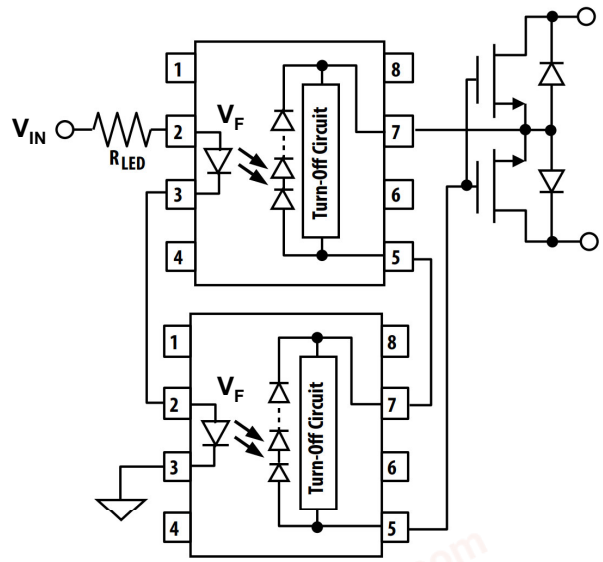

chanhvinh.com

Thermal Resistance Model for ACPL-K305T

The diagram of ACPL-K305T for measurement is shown in Figure 20. Here, one die is heated first and the temperatures of all the dice are recorded after thermal equilibrium is reached. Then, the second die is heated and all the dice temperatures are recorded. With the known ambient temperature, the die junction temperature, and power dissipation, the thermal resistance can be calculated. The thermal resistance calculation can be cast in matrix form. This yields a 2-by-2 matrix for our case of two heat sources.

Figure 20: Diagram of ACPL-K305T for Measurement

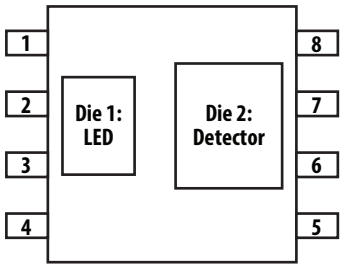

$$\begin{vmatrix} R_{11} & R_{12} \\ R_{21} & R_{22} \end{vmatrix} \times \begin{vmatrix} P_1 \\ P_2 \end{vmatrix} = \begin{vmatrix} \Delta T_1 \\ \Delta T_2 \end{vmatrix}$$

R_{11}: Thermal Resistance of Die1 due to heating of Die1.

R_{12}: Thermal Resistance of Die1 due to heating of Die2.

R_{21}: Thermal Resistance of Die2 due to heating of Die1.

R_{22}: Thermal Resistance of Die2 due to heating of Die2.

P_1: Power dissipation of Die1 (W).

P_2: Power dissipation of Die2 (W).

T_1: Junction temperature of Die1 due to heat from all dice (°C).

T_2: Junction temperature of Die2 due to heat from all dice (°C).

T_A: Ambient temperature.

ΔT_1: Temperature difference between Die1 junction and ambient (°C).

ΔT_2: Temperature difference between Die2 junction and ambient (°C).

$T_1 = R_{11} \times P_1 + R_{12} \times P_2 + T_A$

$T_2 = R_{21} \times P_1 + R_{22} \times P_2 + T_A$

Measurement data on a low K (conductivity) board:

R_{11}: 290°C/W

R_{12}: 89°C/W

R_{21}: 80°C/W

R_{22}: 136°C/W

Measurement data on a high K (conductivity) board:

R_{11}: 242°C/W

R_{12}: 42°C/W

R_{21}: 35°C/W

R_{22}: 86°C/W

Copyright © 2024-2025 Broadcom. All Rights Reserved. The term “Broadcom” refers to Broadcom Inc. and/or its subsidiaries. For more information, go to www.broadcom.com. All trademarks, trade names, service marks, and logos referenced herein belong to their respective companies.

Broadcom reserves the right to make changes without further notice to any products or data herein to improve reliability, function, or design. Information furnished by Broadcom is believed to be accurate and reliable. However, Broadcom does not assume any liability arising out of the application or use of this information, nor the application or use of any product or circuit described herein, neither does it convey any license under its patent rights nor the rights of others.

BROADCOM®