chanhvinh.com

ACPL-333J

2.5 Amp Output Current IGBT Gate Driver Optocoupler with Integrated (V_{CE}) Desaturation Detection, UVLO Fault Status Feedback, Active Miller Clamp and Auto-Fault Reset

Data Sheet

Lead (Pb) Free
RoHS 6 fully compliant

RoHS 6 fully compliant options available;
-xxxE denotes a lead-free product

Description

The ACPL-333J is an advanced 2.5 A output current, easy-to-use, intelligent gate drivers which make IGBT V_{CE} fault protection compact, affordable, and easy-to implement. Features such as integrated V_{CE} detection, under voltage lockout (UVLO), "soft" IGBT turn-off, isolated open collector fault feedback, active Miller clamping and Auto-fault reset provide maximum design flexibility and circuit protection.

The ACPL-333J contains a AlGaAs LED. The LED is optically coupled to an integrated circuit with a power output stage. ACPL-333J are ideally suited for driving power IGBTs and MOSFETs used in motor control inverter applications. The voltage and current supplied by these optocouplers make them ideally suited for directly driving IGBTs with ratings up to 1200 V and 150 A. For IGBTs with higher ratings, the ACPL-333J can be used to drive a discrete power stage which drives the IGBT gate. The ACPL-333J have an insulation voltage of V_{IORM} = 1414 V_{PEAK}.

Block Diagram

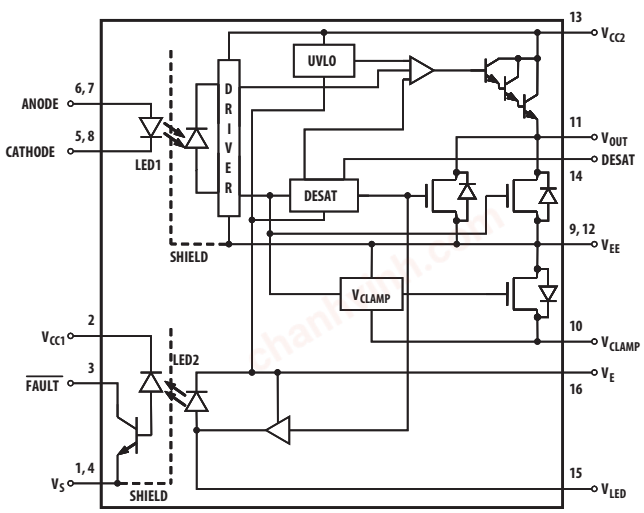

Features

- 2.5 A maximum peak output current
- 2.0 A minimum peak output current
- 250 ns maximum propagation delay over temperature range
- 1.7A Active Miller Clamp.Clamp pin short to V_{EE} if not used
- Desaturation Detection
- Under Voltage Lock-Out Protection (UVLO) with Hysteresis
- Open Collector Isolated fault feedback
- "Soft" IGBT Turn-off
- Automatic Fault Reset after fixed mute time , typical 26µs
- Available in SO-16 package
- 100 ns maximum pulse width distortion (PWD)
- 50 kV/µs minimum common mode rejection (CMR) at V_{CM} = 1500 V
- $I_{CC(max)}$ < 5 mA maximum supply current
- Wide V_{CC} operating range: 15 V to 30 V over temperature range
- Wide operating temperature range: –40°C to 105°C
- Safety approvals:
  UL approval, 5000 V_{RMS} for 1 minute, CSA approval,
  IEC/EN/DIN-EN 60747-5-5 approval V_{IORM} = 1414 V_{PEAK}

Applications

- Isolated IGBT/Power MOSFET gate drive
- AC and brushless DC motor drives
- Industrial inverters and Uninterruptible Power Supply (UPS)

CAUTION: *It is advised that normal static precautions be taken in handling and assembly of this component to prevent damage and/or degradation which may be induced by ESD. The components featured in this datasheet are not to be used in military or aerospace applications or environments.*

chanhvinh.com

Pin Description

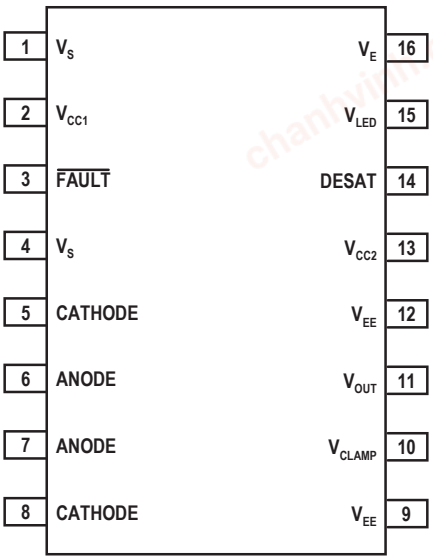

Pin	Symbol	Description
1	V_S	Input Ground
2	V_{CC1}	Positive input supply voltage. (3.3 V to 5.5 V)
3	FAULT	Fault output. $\overline{\text{FAULT}}$ changes from a high impedance state to a logic low output within 5 µs of the voltage on the DESAT pin exceeding an internal reference voltage of 6.5 V. $\overline{\text{FAULT}}$ output is an open collector which allows the $\overline{\text{FAULT}}$ outputs from all ACPL-333J in a circuit to be connected together in a "wired OR" forming a single fault bus for interfacing directly to the micro-controller.
4	V_S	Input Ground
5	CATHODE	Cathode
6	ANODE	Anode
7	ANODE	Anode
8	CATHODE	Cathode
9	V_{EE}	Output supply voltage.
10	V_{CLAMP}	Miller clamp
11	V_{OUT}	Gate drive voltage output
12	V_{EE}	Output supply voltage.
13	V_{CC2}	Positive output supply voltage
14	DESAT	Desaturation voltage input. When the voltage on DESAT exceeds an internal reference voltage of 6.5 V while the IGBT is on, $\overline{\text{FAULT}}$ output is changed from a high impedance state to a logic low state within 5 µs.
15	V_{LED}	LED anode. This pin must be left unconnected for guaranteed data sheet performance. (For optical coupling testing only)
16	V_E	Common (IGBT emitter) output supply voltage.

Ordering Information

ACPL-333J is UL Recognized with 5000 Vrms for 1 minute per UL1577.

Part number	Option RoHS Compliant	Package	Surface Mount	Tape& Reel	IEC/EN/DIN EN 60747-5-5	Quantity
ACPL-333J	-000E	SO-16	X		X	45 per tube
	-500E		X	X	X	850 per reel

To order, choose a part number from the part number column and combine with the desired option from the option column to form an order entry.

Example 1:

ACPL-333J-500E to order product of SO-16 Surface Mount package in Tape and Reel packaging with IEC/EN/DIN EN 60747-5-5 Safety Approval in RoHS compliant.

Example 2:

ACPL-333J-000E to order product of SO-16 Surface Mount package in tube packaging with IEC/EN/DIN EN 60747-5-5 Safety Approval and RoHS compliant.

Option datasheets are available. Contact your Avago sales representative or authorized distributor for information.

Remarks: The notation '#XXX' is used for existing products, while (new) products launched since 15th July 2001 and RoHS compliant option will use '-XXXE'.

chanhvinh.com

Package Outline Drawings

16-Lead Surface Mount

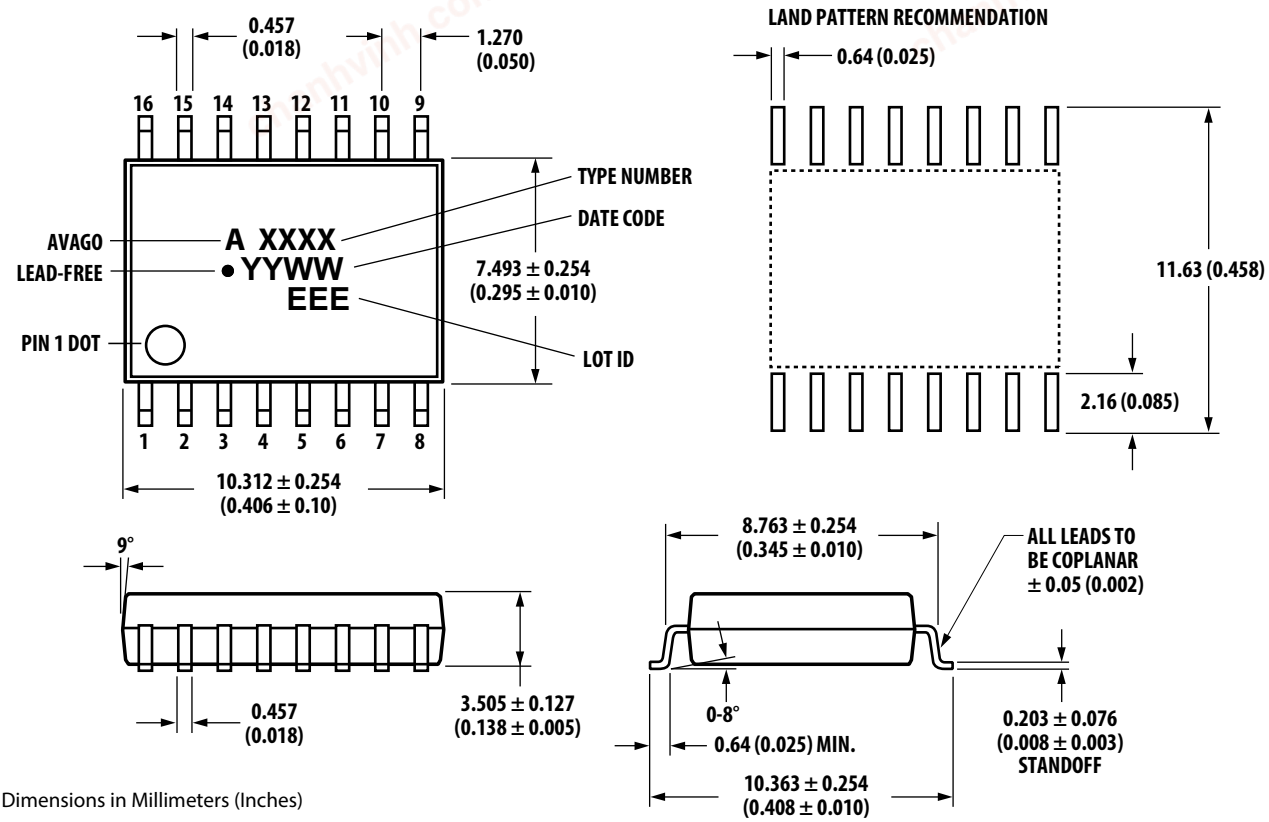

Dimensions in Millimeters (Inches)

Floating lead protrusion is 0.25 mm (10 mils) Max.

Note: Initial and continued variation in color of the white mold compound is normal and does not affect performance or reliability of the device

chanhvinh.com

Recommended Pb-Free IR Profile

Recommended reflow condition as per JEDEC Standard, J-STD-020 (latest revision). Non-Halide Flux should be used.

Regulatory Information

The ACPL-333J has been approved by the following organizations:

IEC/EN/DIN EN 60747-5-5	Approval under: DIN EN 60747-5-5 (VDE 0884-5):2011-11 EN 60747-5-5:2011
UL	Approval under UL 1577, component recognition program up to V_{ISO} = 5000 V_{RMS}. File E55361.
CSA	Approval under CSA Component Acceptance Notice #5, File CA 88324.

Table 1. IEC/EN/DIN EN 60747-5-5 Insulation Characteristics*

Description	Symbol	Characteristic	Unit
Installation classification per DIN VDE 0110/39, Table 1			
for rated mains voltage ≤ 150 V_{rms}		I – IV	
for rated mains voltage ≤ 300 V_{rms}		I – IV	
for rated mains voltage ≤ 600 V_{rms}		I – IV	
for rated mains voltage ≤ 1000V_{rms}		I – III	
Climatic Classification		40/100/21	
Pollution Degree (DIN VDE 0110/39)		2	
Maximum Working Insulation Voltage	V_{IORM}	1414	V_{peak}
Input to Output Test Voltage, Method b**, V_{IORM} x 1.875=V_{PR}, 100% Production Test with t_m=1 sec, Partial discharge < 5 pC	V_{PR}	2652	V_{peak}
Input to Output Test Voltage, Method a**, V_{IORM} x 1.6=V_{PR}, Type and Sample Test, t_m=10 sec, Partial discharge < 5 pC	V_{PR}	2262	V_{peak}
Highest Allowable Overvoltage (Transient Overvoltage t_{ini} = 60 sec)	V_{IOTM}	8000	V_{peak}
Safety-limiting values – maximum values allowed in the event of a failure.			
Case Temperature	T_S	175	°C
Input Current	$I_{S, INPUT}$	400	mA
Output Power	$P_{S, OUTPUT}$	1200	mW
Insulation Resistance at T_S, V_{IO} = 500 V	R_S	$>10^9$	Ω

* Isolation characteristics are guaranteed only within the safety maximum ratings which must be ensured by protective circuits in application. Surface mount classification is class A in accordance with CECCOO802.

** Refer to IEC/EN/DIN EN 60747-5-5 Optoisolator Safety Standard section of the Avago Regulatory Guide to Isolation Circuits, AV02-2041EN for a detailed description of Method a and Method b partial discharge test profiles.

Dependence of Safety Limiting Values on Temperature. (take from DS AV01-0579EN Pg.7)

chanhvinh.com

Table 2. Insulation and Safety Related Specifications

Parameter	Symbol	ACPL-333J	Units	Conditions
Minimum External Air Gap (Clearance)	L(101)	8.3	mm	Measured from input terminals to output terminals, shortest distance through air.
Minimum External Tracking (Creepage)	L(102)	8.3	mm	Measured from input terminals to output terminals, shortest distance path along body.
Minimum Internal Plastic Gap (Internal Clearance)		0.5	mm	Through insulation distance conductor to conductor, usually the straight line distance thickness between the emitter and detector.
Tracking Resistance (Comparative Tracking Index)	CTI	>175	V	DIN IEC 112/VDE 0303 Part 1
Isolation Group		IIIa		Material Group (DIN VDE 0110, 1/89, Table 1)

Table 3. Absolute Maximum Ratings

Parameter	Symbol	Min.	Max.	Units	Note
Storage Temperature	T_S	-55	125	°C	
Operating Temperature	T_A	-40	105	°C	2
Output IC Junction Temperature	T_J		125	°C	2
Average Input Current	$I_{F(AVG)}$		25	mA	1
Peak Transient Input Current, (<1 µs pulse width, 300pps)	$I_{F(TRAN)}$		1.0	A	
Reverse Input Voltage	V_R		5	V	
"High" Peak Output Current	$I_{OH(PEAK)}$		2.5	A	3
"Low" Peak Output Current	$I_{OL(PEAK)}$		2.5	A	3
Positive Input Supply Voltage	V_{CC1}	-0.5	7.0	V	
$\overline{FAULT}$ Output Current	$I_{\overline{FAULT}}$		8.0	mA	
$\overline{FAULT}$ Pin Voltage	$V_{\overline{FAULT}}$	-0.5	V_{CC1}	V	
Total Output Supply Voltage	$(V_{CC2} - V_{EE})$	-0.5	33	V	
Negative Output Supply Voltage	$(V_E - V_{EE})$	-0.5	15	V	6
Positive Output Supply Voltage	$(V_{CC2} - V_E)$	-0.5	33 - $(V_E - V_{EE})$	V	
Gate Drive Output Voltage	$V_{O(PEAK)}$	-0.5	V_{CC2}	V	
Peak Clamping Sinking Current	I_{Clamp}		1.7	A	
Miller Clamping Pin Voltage	V_{Clamp}	-0.5	V_{CC2}	V	
DESAT Voltage	V_{DESAT}	V_E	V_E + 10	V	
Output IC Power Dissipation	P_O		600	mW	2
Input IC Power Dissipation	P_I		150	mW	2
Solder Reflow Temperature Profile	See Package Outline Drawings section				

Table 4. Recommended Operating Conditions

Parameter	Symbol	Min.	Max.	Units	Note
Operating Temperature	T_A	- 40	105	°C	2
Total Output Supply Voltage	$(V_{CC2} - V_{EE})$	15	30	V	7
Negative Output Supply Voltage	$(V_E - V_{EE})$	0	15	V	4
Positive Output Supply Voltage	$(V_{CC2} - V_E)$	15	30 - $(V_E - V_{EE})$	V	
Input Current (ON)	$I_{F(ON)}$	8	12	mA	
Input Voltage (OFF)	$V_{F(OFF)}$	- 3.6	0.8	V	

chanhvinh.com

Table 5. Electrical Specifications (DC)

Unless otherwise noted, all typical values at T_A = 25°C, V_{CC2} - V_{EE} = 30 V, V_E - V_{EE} = 0 V;
all Minimum/Maximum specifications are at Recommended Operating Conditions. Positive Supply Voltage used.

Parameter	Symbol	Min.	Typ.	Max.	Units	Test Conditions	Fig.	Note
$\overline{FAULT}$ Logic Low Output Voltage	$V_{\overline{FAULTL}}$		0.1	0.4	V	$I_{\overline{FAULT}}$ = 1.1 mA, V_{CC1} = 5.5V		
			0.1	0.4	V	$I_{\overline{FAULT}}$ = 1.1 mA, V_{CC1} = 3.3V		
$\overline{FAULT}$ Logic High Output Current	$I_{\overline{FAULTH}}$		0.02	0.5	µA	$V_{\overline{FAULT}}$ = 5.5 V, V_{CC1} = 5.5V		
			0.002	0.3	µA	$V_{\overline{FAULT}}$ = 3.3 V, V_{CC1} = 3.3V		
High Level Output Current	I_{OH}	-0.5	-1.5		A	$V_O = V_{CC2}$ - 4	2, 6, 21	5
		-2.0			A	$V_O = V_{CC2}$ – 15		3
Low Level Output Current	I_{OL}	0.5	1.5		A	$V_O = V_{EE}$ + 2.5	3, 7, 22	5
		2.0			A	$V_O = V_{EE}$ + 15		3
Low Level Output Current During Fault Condition	I_{OLF}		140		mA	V_{OUT} - V_{EE} = 14 V		6
High Level Output Voltage	V_{OH}	V_{CC}-2.9	V_{CC}-2.0		V	I_O = -650 µA	4, 23	7, 8, 9 23
Low Level Output Voltage	V_{OL}		0.17	0.5	V	I_O = 100 mA	5, 24	
Clamp Pin Threshold Voltage	V_{tClamp}		2.0		V			
Clamp Low Level Sinking Current	I_{CL}	0.35	1.1		A	$V_O = V_{EE}$ + 2.5	8	
High Level Supply Current	I_{CC2H}		2.5	5	mA	I_O = 0 mA	9, 10, 25, 26	9
Low Level Supply Current	I_{CC2L}		2.5	5	mA	I_O = 0 mA		
Blanking Capacitor Charging Current	I_{CHG}	-0.13	-0.24	-0.33	mA	V_{DESAT} = 2 V	11, 27	9, 10
Blanking Capacitor Discharge Current	I_{DSCHG}	10	30		mA	V_{DESAT} = 7.0 V	28	
DESAT Threshold	V_{DESAT}	6	6.5	7.5	V	V_{CC2} -V_E >V_{UVLO-}	12	9
UVLO Threshold	V_{UVLO+}	10.5	11.6	12.5	V	V_O > 5 V		7, 9, 11
	V_{UVLO-}	9.2	10.3	11.1	V	V_O < 5 V		7, 9, 12
UVLO Hysteresis	(V_{UVLO+} - V_{UVLO-})	0.4	1.3		V			
Threshold Input Current Low to High	I_{FLH}		2.0	6	mA	I_O = 0 mA, V_O > 5 V		
Threshold Input Voltage High to Low	V_{FHL}	0.8			V			
Input Forward Voltage	V_F	1.2	1.6	1.95	V	I_F = 10 mA		
Temperature Coefficient of Input Forward Voltage	$\Delta V_F/\Delta T_A$		-1.3		mV/°C			
Input Reverse Breakdown Voltage	BV_R	5			V	I_R = 10 µA		
Input Capacitance	C_{IN}		70		pF	f = 1 MHz, V_F = 0 V		

chanhvinh.com

Table 6. Switching Specifications (AC)

Unless otherwise noted, all typical values at T_A = 25°C, V_{CC2} - V_{EE} = 30 V, V_E - V_{EE} = 0 V; all Minimum/Maximum specifications are at Recommended Operating Conditions. Only Positive Supply Voltage used.

Parameter	Symbol	Min.	Typ.	Max.	Units	Test Conditions	Fig.	Note
Propagation Delay Time to High Output Level	t_{PLH}	100	180	250	ns	R_g = 10 Ω, C_g = 10 nF, f = 10 kHz, Duty Cycle = 50%, I_F = 10 mA, V_{CC2} = 30 V	1, 13, 14, 15, 16, 29	13, 15
Propagation Delay Time to Low Output Level	t_{PHL}	100	180	250	ns		1, 13, 14, 15, 16, 29	
Pulse Width Distortion	PWD	-100	20	100	ns			14, 17
Propagation Delay Difference Between Any Two Parts or Channels	(t_{PHL} - t_{PLH}) PDD	-150		150	ns			17, 16
Rise Time	t_R		50		ns			
Fall Time	t_F		50		ns			
DESAT Sense to 90% VO Delay	$t_{DESAT(90\%)}$		0.15	0.5	µs	C_{DESAT} = 100pF, R_g = 10 Ω, C_g = 10 nF, V_{CC2} = 30 V	17, 30	19
DESAT Sense to 10% VO Delay	$t_{DESAT(10\%)}$		2	3	µs	C_{DESAT} = 100pF, R_g = 10 Ω, C_g = 10 nF, V_{CC2} = 30 V	18, 19, 20, 30	
DESAT Sense to Low Level FAULT Signal Delay	$t_{DESAT(FAULT)}$		0.25	0.5	µs	C_{DESAT} = 100 pF, R_F = 2.1 kΩ, C_F = Open, Rg = 10 Ω, Cg = 10 nF, V_{CC2} = 30 V	30	18
			0.8			C_{DESAT} = 100 pF, R_F = 2.1 kΩ, C_F = 1 nF, Rg = 10 Ω, Cg = 10 nF, V_{CC2} = 30 V		
DESAT Sense to DESAT Low Propagation Delay	$t_{DESAT(LOW)}$		0.25		µs	C_{DESAT} = 100pF, R_F = 2.1 kΩ, R_g = 10 Ω, C_g = 10 nF, V_{CC2} = 30 V	30	19
DESAT Input Mute	$t_{DESAT(MUTE)}$	15	26	40	µs	C_{DESAT} = 100pF, R_F = 2.1 kΩ, R_g = 10 Ω, C_g = 10 nF, V_{CC1} = 5.5V, V_{CC2} = 30 V		20
Output High Level Common Mode Transient Immunity	$\|CM_H\|$	15	25		kV/µs	T_A = 25°C, I_F = 10 mA V_{CM} = 1500 V, V_{CC2} = 30 V, R_F = 2.1 kΩ, C_F = 15 pF	31, 32, 33, 34	21
		50	60			T_A = 25°C, I_F = 10 mA V_{CM} = 1500 V, V_{CC2} = 30 V, R_F = 2.1 kΩ, C_F = 1 nF		21,26
Output Low Level Common Mode Transient Immunity	$\|CM_L\|$	15	25		kV/µs	T_A = 25°C, V_F = 0 V V_{CM} = 1500 V, V_{CC2} = 30 V, R_F = 2.1 kΩ, C_F = 15 pF	31, 32, 33, 34	22
		50	60			T_A = 25°C, V_F = 0 V V_{CM} = 1500 V, V_{CC2} = 30 V, R_F = 2.1 kΩ, C_F = 1 nF		

chanhvinh.com

Table 7. Package Characteristics

Parameter	Symbol	Min.	Typ.	Max.	Units	Test Conditions	Fig.	Note
Input-Output Momentary Withstand Voltage	V_{ISO}	5000			V_{rms}	RH < 50%, t = 1 min., T_A = 25°C		24, 25
Input-Output Resistance	R_{I-O}		> 10^9		Ω	V_{I-O} = 500 V		25
Input-Output Capacitance	C_{I-O}		1.3		pF	freq=1 MHz		
Output IC-to-Pins 9 &10 Thermal Resistance	θ_{09-10}		30		°C/W	T_A = 25°C		

Notes:
1. Derate linearly above 70°C free air temperature at a rate of 0.3 mA/°C.
2. In order to achieve the absolute maximum power dissipation specified, pins 4, 9, and 10 require ground plane connections and may require airflow. See the Thermal Model section in the application notes at the end of this data sheet for details on how to estimate junction temperature and power dissipation. In most cases the absolute maximum output IC junction temperature is the limiting factor. The actual power dissipation achievable will depend on the application environment (PCB Layout, air flow, part placement, etc.). See the Recommended PCB Layout section in the application notes for layout considerations. Output IC power dissipation is derated linearly at 10 mW/°C above 90°C. Input IC power dissipation does not require derating.
3. Maximum pulse width = 10 µs. This value is intended to allow for component tolerances for designs with I_O peak minimum = 2.0 A. Derate linearly from 3.0 A at +25°C to 2.5 A at +105°C. This compensates for increased I_{OPEAK} due to changes in V_{OL} over temperature.
4. This supply is optional. Required only when negative gate drive is implemented.
5. Maximum pulse width = 50 µs.
6. See the Slow IGBT Gate Discharge During Fault Condition section in the applications notes at the end of this data sheet for further details.
7. 15 V is the recommended minimum operating positive supply voltage (V_{CC2} - V_E) to ensure adequate margin in excess of the maximum V_{UVLO+} threshold of 12.5V. For High Level Output Voltage testing, V_{OH} is measured with a dc load current. When driving capacitive loads, V_{OH} will approach V_{CC} as I_{OH} approaches zero units.
8. Maximum pulse width = 1.0 ms.
9. Once V_O of the ACPL-333J is allowed to go high (V_{CC2} - V_E > V_{UVLO+}), the DESAT detection feature of the ACPL-333J will be the primary source of IGBT protection. UVLO is needed to ensure DESAT is functional. Once V_{CC2} is increased from 0V to above V_{UVLO+}, DESAT will remain functional until V_{CC2} is decreased below V_{UVLO-}. Thus, the DESAT detection and UVLO features of the ACPL-333J work in conjunction to ensure constant IGBT protection.
10. See the DESAT fault detection blanking time section in the applications notes at the end of this data sheet for further details.
11. This is the "increasing" (i.e. turn-on or "positive going" direction) of V_{CC2} - V_E
12. This is the "decreasing" (i.e. turn-off or "negative going" direction) of V_{CC2} - V_E
13. This load condition approximates the gate load of a 1200 V/150A IGBT.
14. Pulse Width Distortion (PWD) is defined as $|t_{PHL} - t_{PLH}|$ for any given unit.
15. As measured from I_F to V_O.
16. The difference between t_{PHL} and t_{PLH} between any two ACPL-333J parts under the same test conditions.
17. As measured from ANODE, CATHODE of LED to V_{OUT}
18. This is the amount of time from when the DESAT threshold is exceeded, until the FAULT output goes low.
19. This is the amount of time the DESAT threshold must be exceeded before V_{OUT} begins to go low, and the FAULT output to go low. This is supply voltage dependent.
20. Fault Reset: This is the amount of time when V_{OUT} will be asserted low after DESAT threshold is exceeded. See the Description of Operation (Fault Reset) topic in the application information section.
21. Common mode transient immunity in the high state is the maximum tolerable dV_{CM}/dt of the common mode pulse, V_{CM}, to assure that the output will remain in the high state (i.e., V_O > 15 V or FAULT > 2 V).
22. Common mode transient immunity in the low state is the maximum tolerable dV_{CM}/dt of the common mode pulse, V_{CM}, to assure that the output will remain in a low state (i.e., V_O < 1.0 V or FAULT < 0.8 V).
23. To clamp the output voltage at V_{CC} - 3 V_{BE}, a pull-down resistor between the output and V_{EE} is recommended to sink a static current of 650 µA while the output is high. See the Output Pull-Down Resistor section in the application notes at the end of this data sheet if an output pull-down resistor is not used.
24. In accordance with UL 1577, each optocoupler is proof tested by applying an insulation test voltage ≥ 6000 Vrms for 1 second. This test is performed before the 100% production test for partial discharge (method b) shown in IEC/EN/DIN EN 60747-5-5 Insulation Characteristic Table.\
25. This is a two-terminal measurement: pins 1-8 are shorted together and pins 9-16 are shorted together.
26. Split resistors network with a ratio of 1:1 is needed at input LED1. See Figure 34.

chanhvinh.com

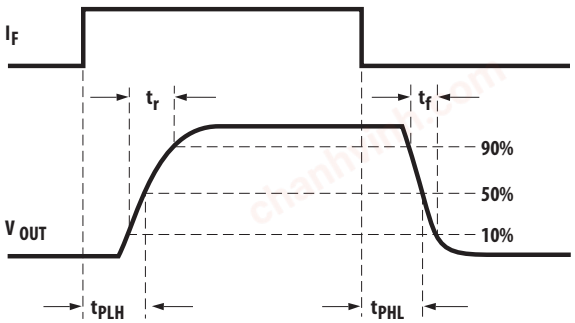

Figure 1. VOUT propagation delay waveforms

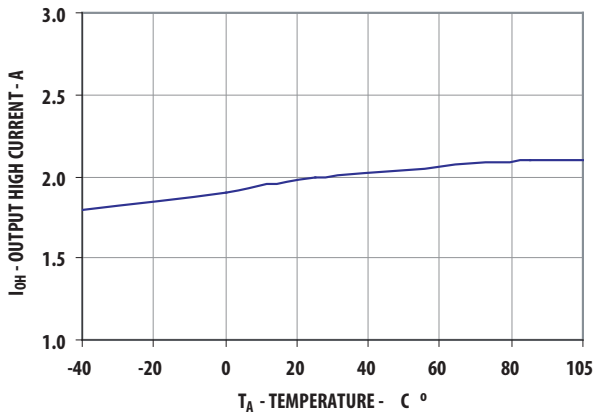

Figure 2. I_{OH} vs. temperature

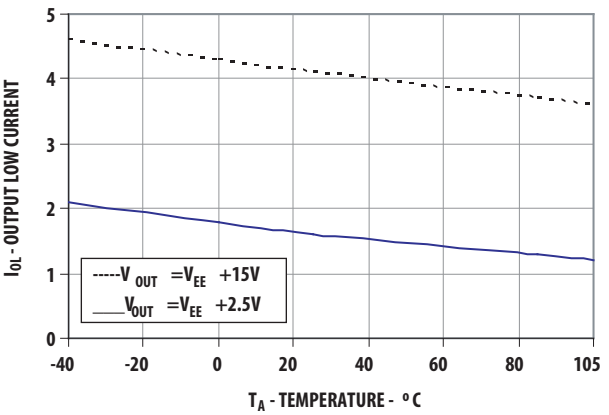

Figure 3. I_{OL} vs. temperature

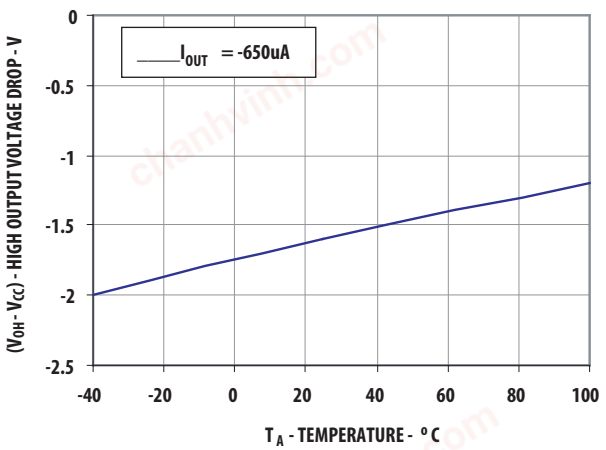

Figure 4. V_{OH} vs. temperature

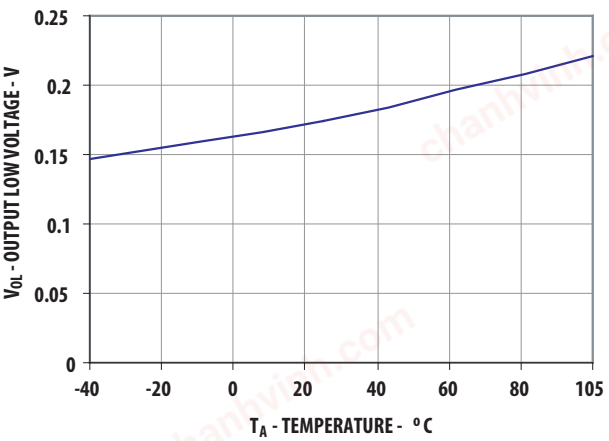

Figure 5. V_{OL} vs. temperature

chanhvinh.com

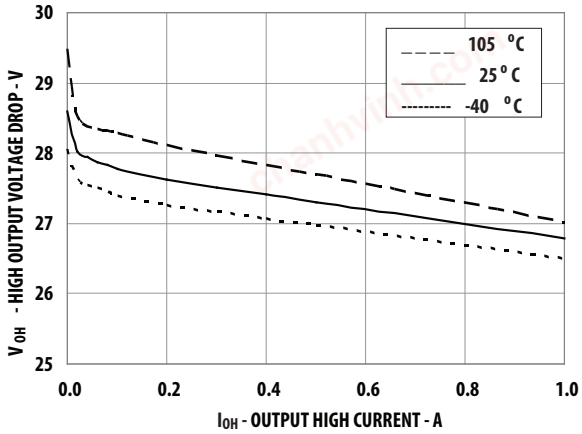

Figure 6. V_{OH} vs. I_{OH}

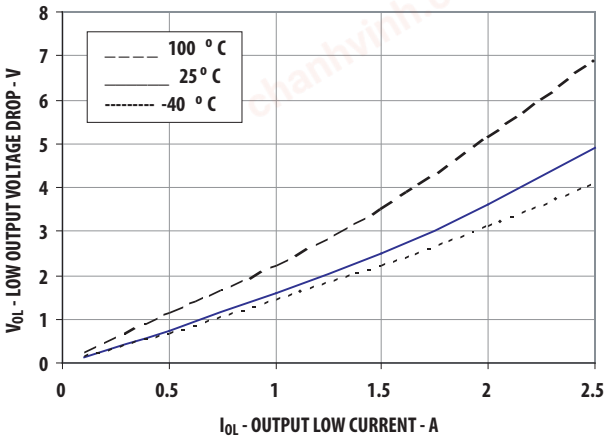

Figure 7. V_{OL} vs. I_{OL}

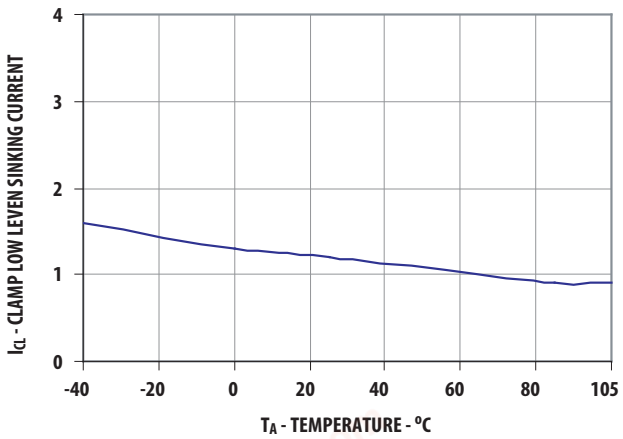

Figure 8. I_{CL} vs. temperature

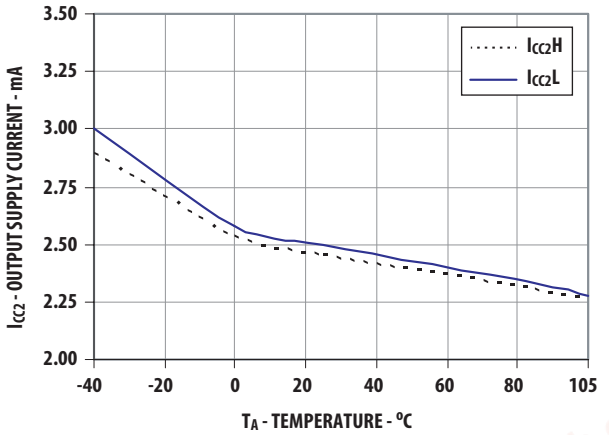

Figure 9. I_{CC2} vs. temperature

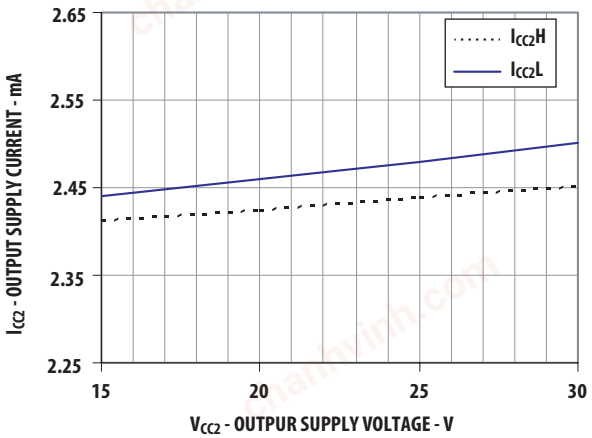

Figure 10. I_{CC2} vs. V_{CC2}

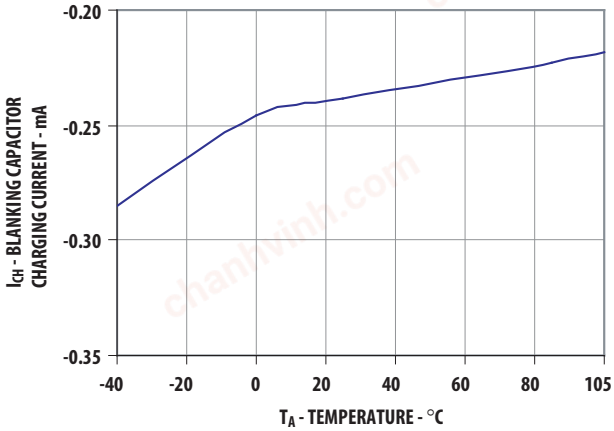

Figure 11. I_{CHG} vs. temperature

chanhvinh.com

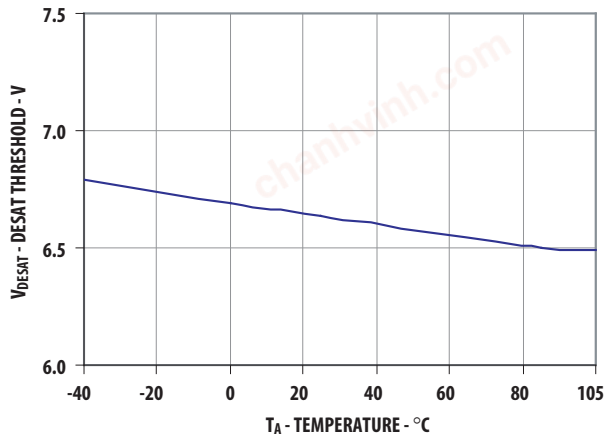

Figure 12. DESAT threshold vs. temperature

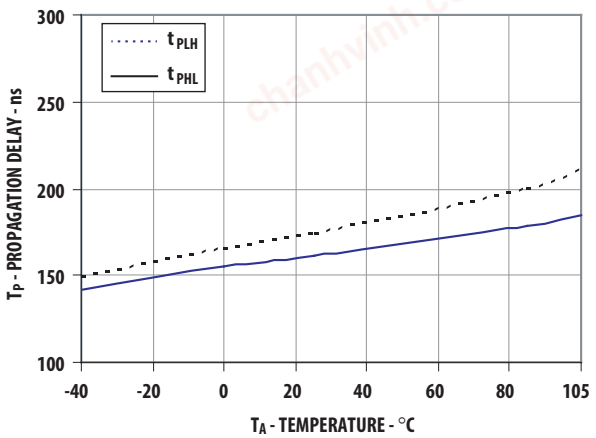

Figure 13. Propagation delay vs. temperature

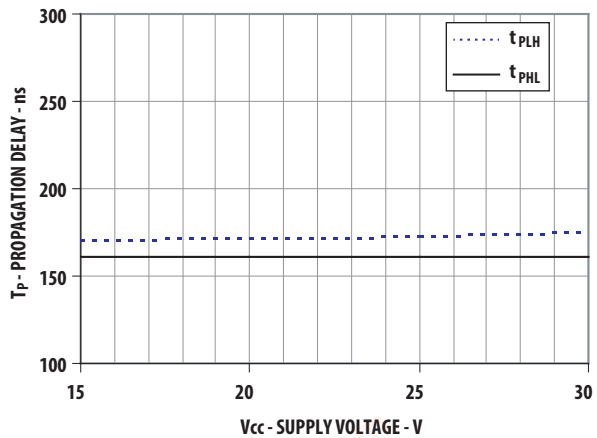

Figure 14. Propagation delay vs. supply voltage

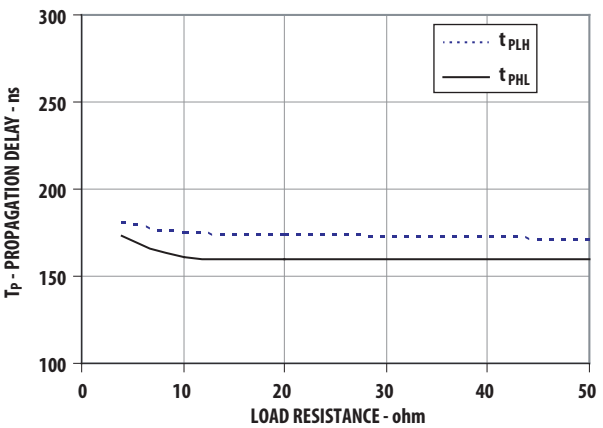

Figure 15. Propagation delay vs. load resistance

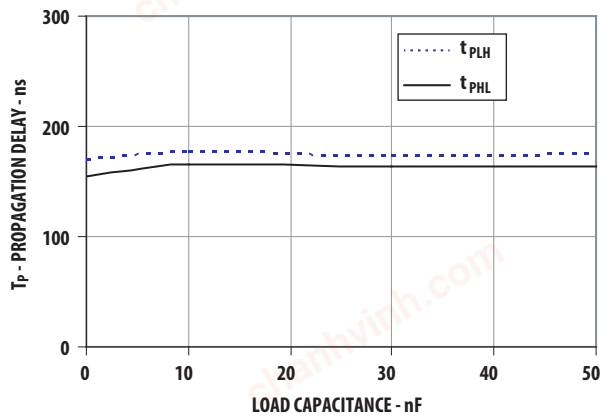

Figure 16. Propagation delay vs. load capacitance

chanhvinh.com

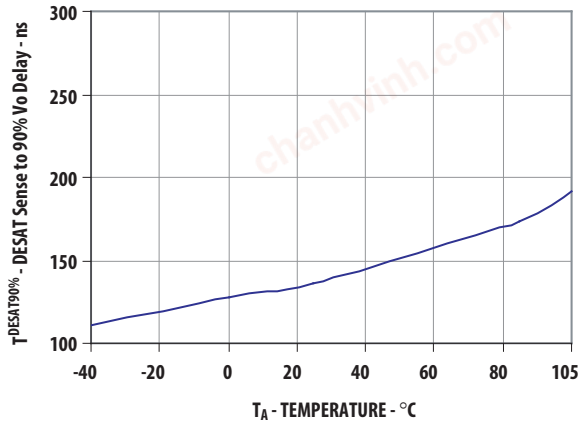

Figure 17. DESAT sense to 90% VOUT delay vs. temperature

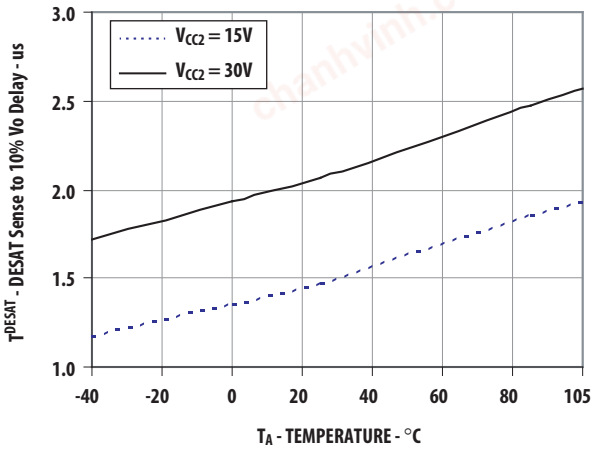

Figure 18. DESAT sense to 10% VOUT delay vs. temperature

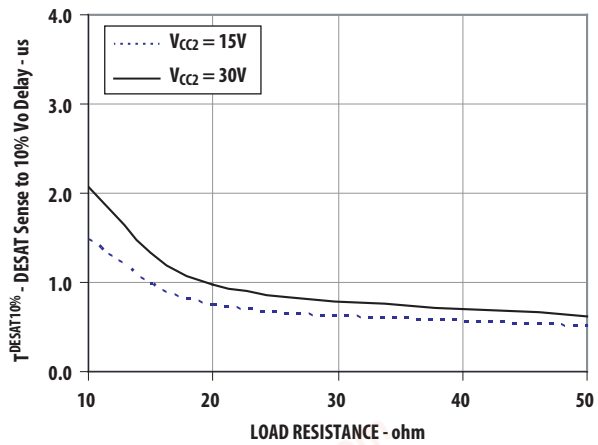

Figure 19. DESAT sense to 10% VOUT delay vs. load resistance

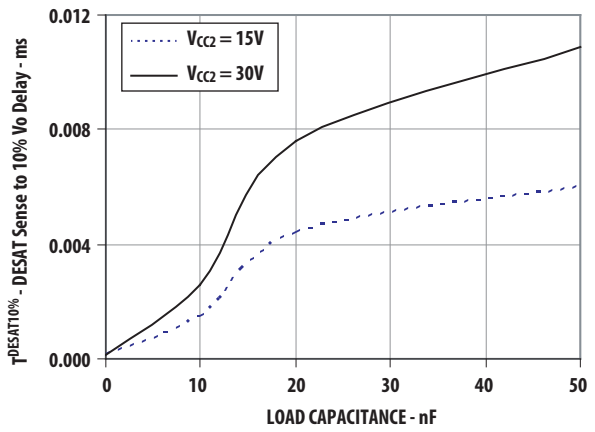

Figure 20. DESAT sense to 10% VOUT delay vs. load capacitance

chanhvinh.com

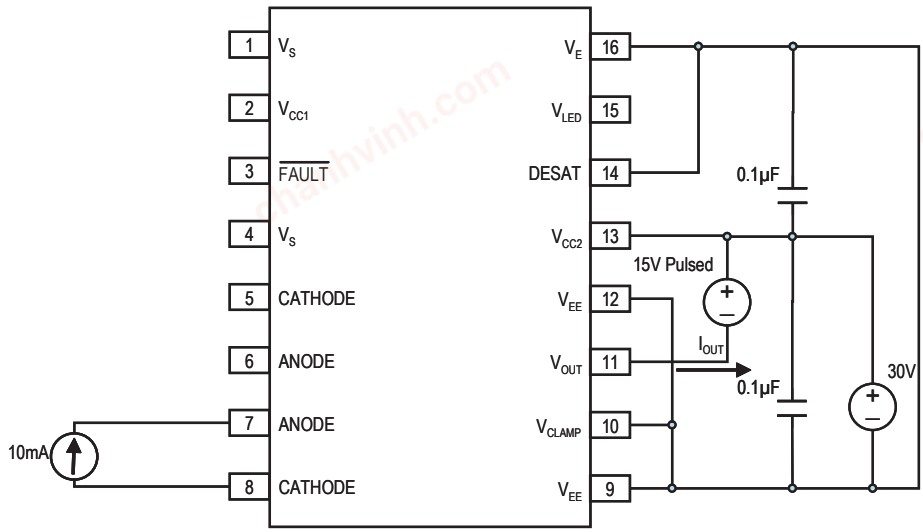

Figure 21. I_{OH} Pulsed test circuit

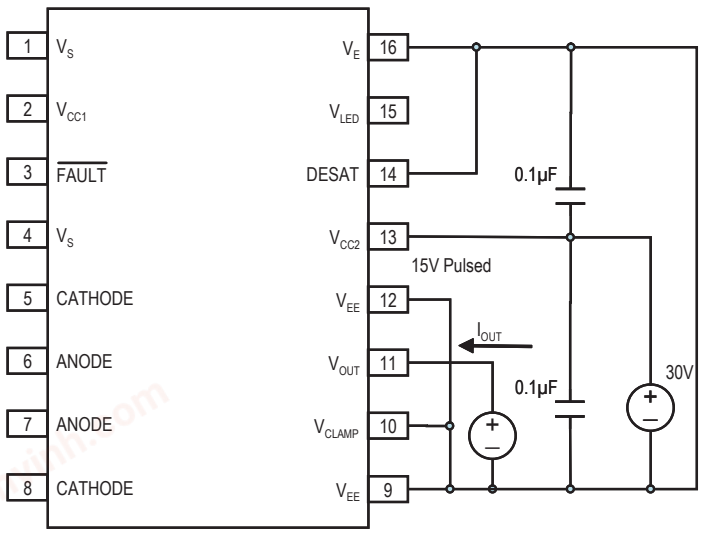

Figure 22. I_{OL} Pulsed test circuit

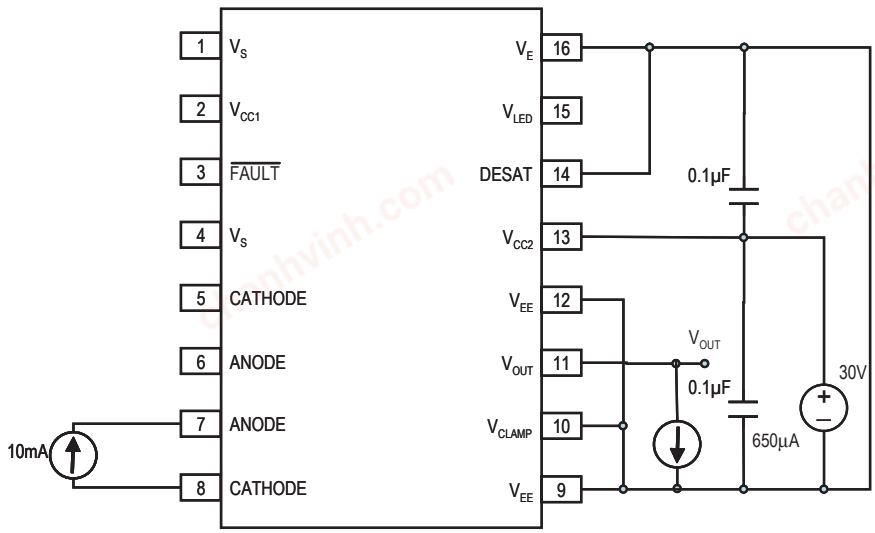

Figure 23. V_{OH} Pulsed test circuit

chanhvinh.com

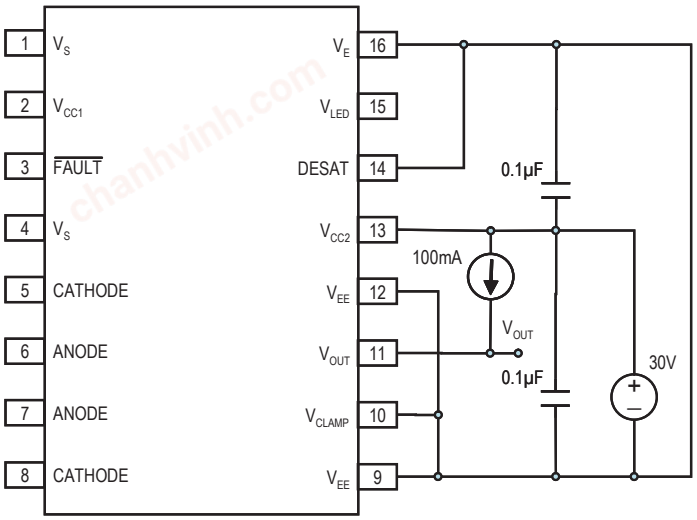

Figure 24. V_{OL} Pulsed test circuit

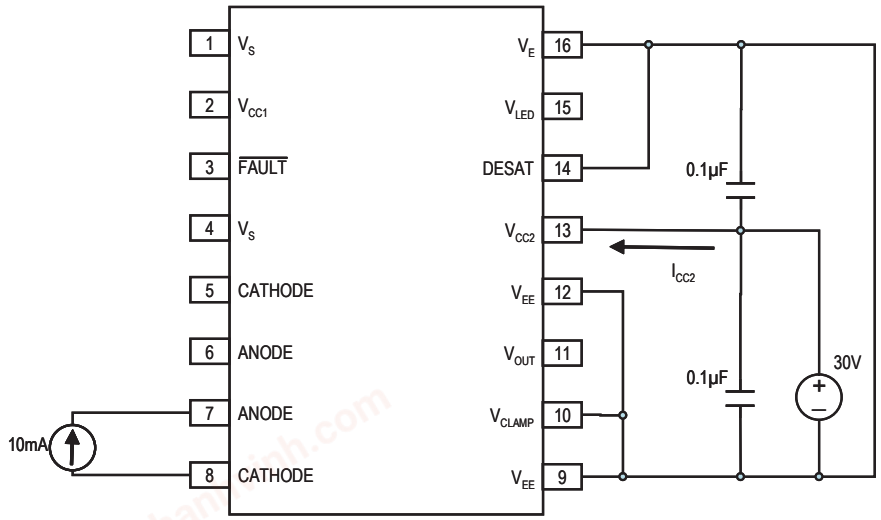

Figure 25. I_{CC2H} test circuit

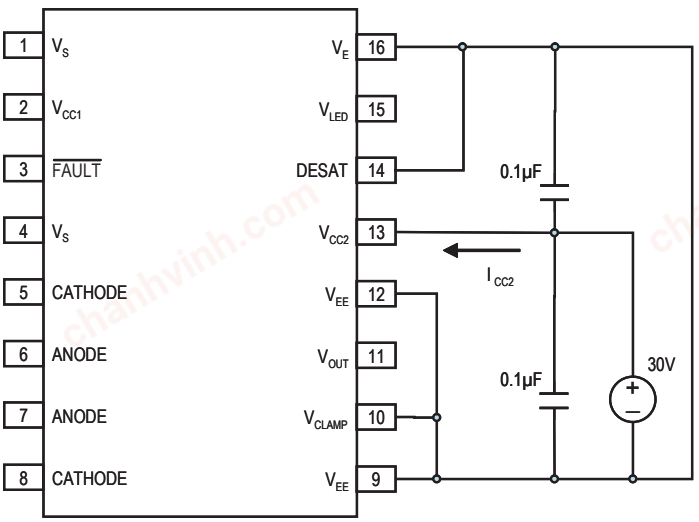

Figure 26. I_{CC2L} test circuit

chanhvinh.com

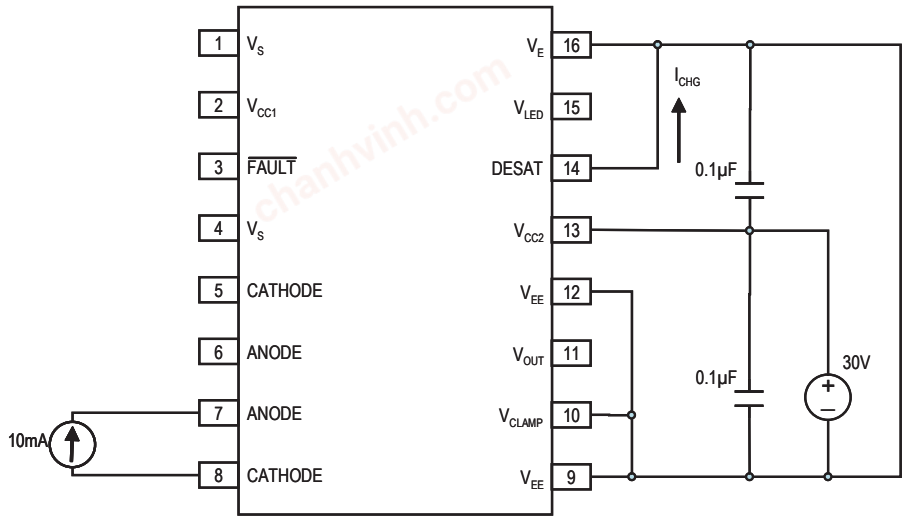

Figure 27. I_{CHG} Pulsed test circuit

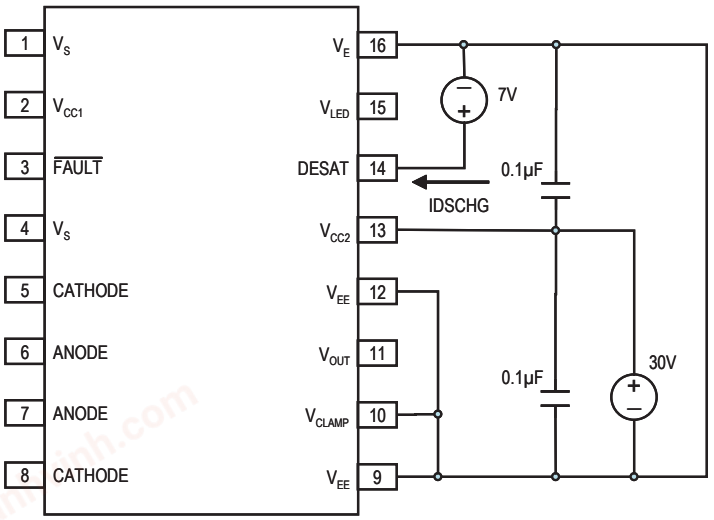

Figure 28. I_{DSCHG} test circuit

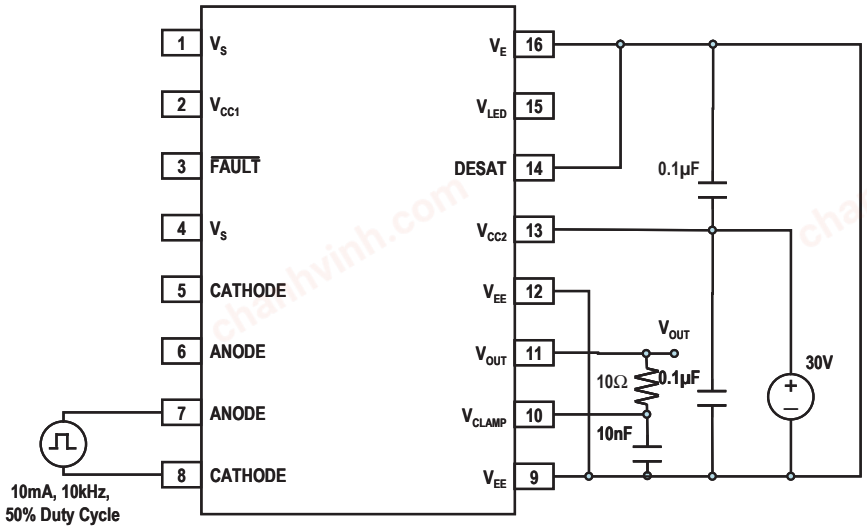

Figure 29. t_{PLH}, t_{PHL}, t_f, t_r, test circuit

chanhvinh.com

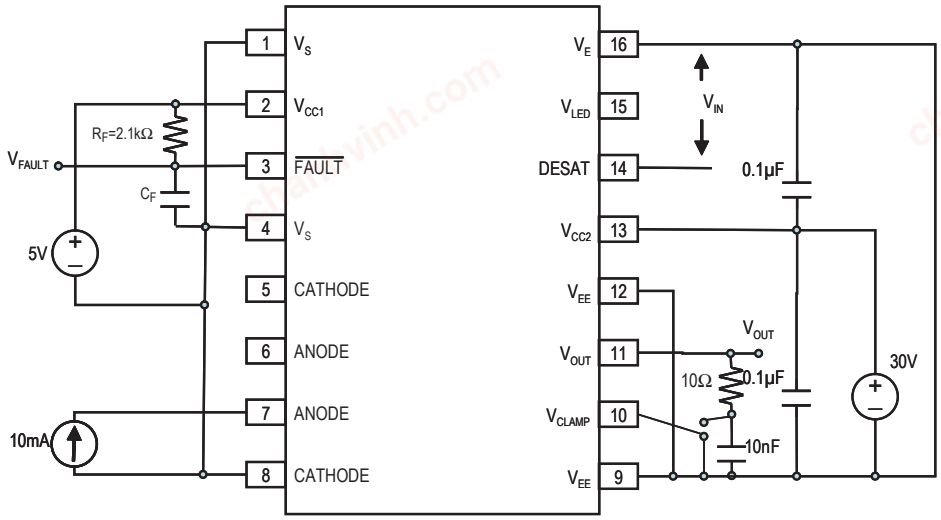

Figure 30. t_{DESAT} fault test circuit

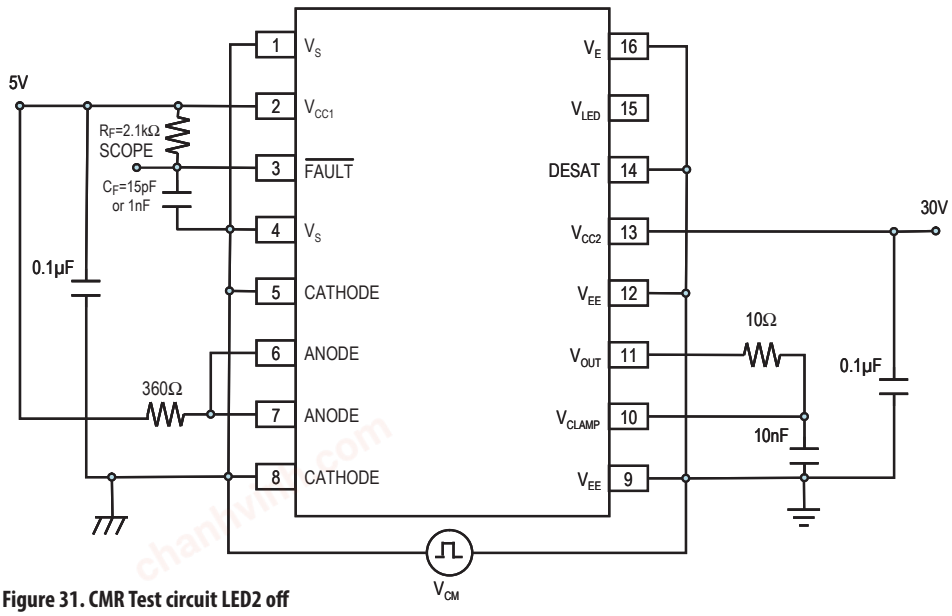

Figure 31. CMR Test circuit LED2 off

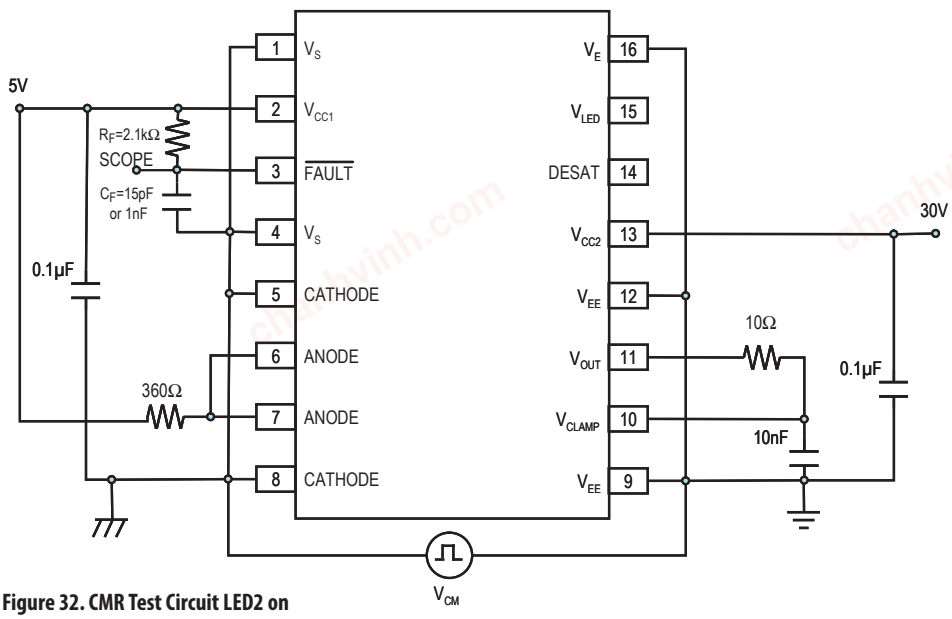

Figure 32. CMR Test Circuit LED2 on

chanhvinh.com

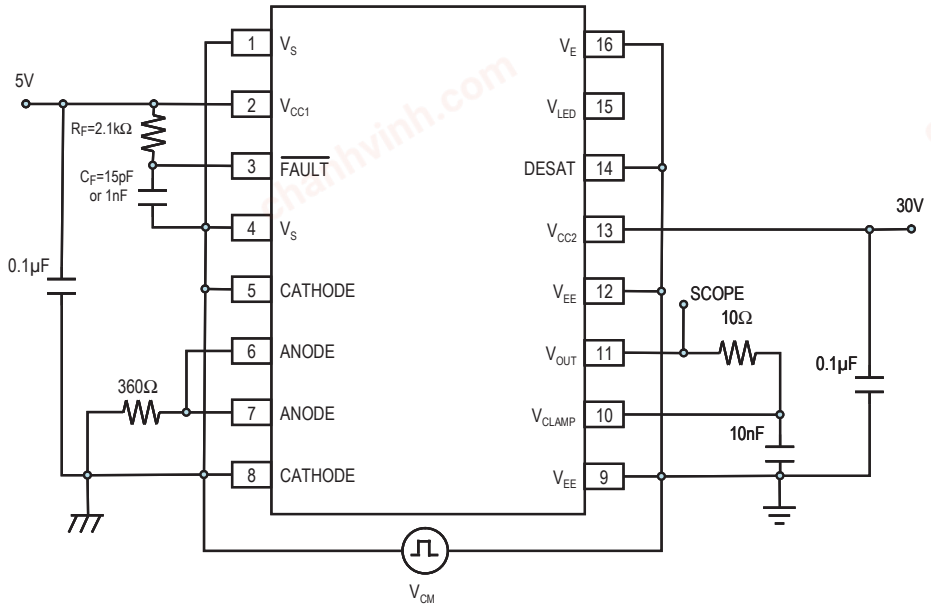

Figure 33. CMR Test circuit LED1 off

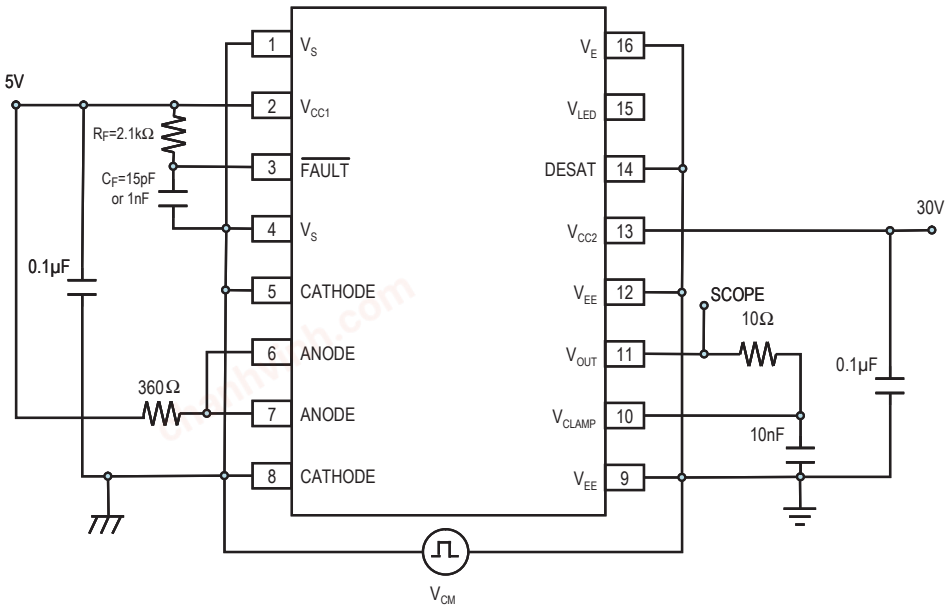

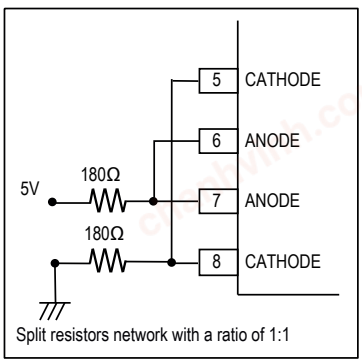

Figure 34. CMR Test Circuit LED1 on

chanhvinh.com

Application Information

Product Overview Description

The ACPL-333J are highly integrated power control devices that incorporate all the necessary components for a complete, isolated IGBT / MOSFET gate drive circuit with fault protection and feedback into one SO-16 package. Active Miller clamp function eliminates the need of negative gate drive in most application and allows the use of simple bootstrap supply for high side driver. An optically isolated power output stage drives IGBTs with power ratings of up to 150 A and 1200 V. A high speed internal optical link minimizes the propagation delays between the microcontroller and the IGBT while allowing the two systems to operate at very large common mode voltage differences that are common in industrial motor drives and other power switching applications. An output IC provides local protection for the IGBT to prevent damage during over current, and a second optical link provides a fully isolated fault status feedback signal for the microcontroller. A built in "watchdog" circuit, UVLO monitors the power stage supply voltage to prevent IGBT caused by insufficient gate drive voltages. This integrated IGBT gate driver is designed to increase the performance and reliability of a motor drive without the cost, size, and complexity of a discrete design.

Two light emitting diodes and two integrated circuits housed in the same SO-16 package provide the input control circuitry, the output power stage, and two optical channels. The output Detector IC is designed manufactured on a high voltage BiCMOS/Power DMOS process. The forward optical signal path, as indicated by LED1, transmits the gate control signal. The return optical signal path, as indicated by LED2, transmits the fault status feedback signal.

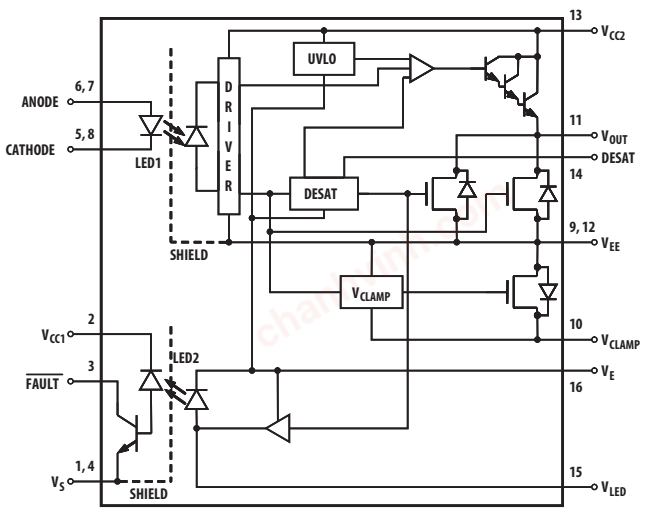

Figure 35. Block Diagram of ACPL-333J

Under normal operation, the LED1 directly controls the IGBT gate through the isolated output detector IC, and LED2 remains off. When an IGBT fault is detected, the output detector IC immediately begins a "soft" shutdown sequence, reducing the IGBT current to zero in a controlled manner to avoid potential IGBT damage from inductive over voltages. Simultaneously, this fault status is transmitted back to the input via LED2, where the fault latch disables the gate control input and the active low fault output alerts the microcontroller.

During power-up, the Under Voltage Lockout (UVLO) feature prevents the application of insufficient gate voltage to the IGBT, by forcing the ACPL-333J 's output low. Once the output is in the high state, the DESAT (VCE) detection feature of the ACPL-333J provides IGBT protection. Thus, UVLO and DESAT work in conjunction to provide constant IGBT protection.

Recommended Application Circuit

The ACPL-333J have an LED input gate control, and an open collector fault output suitable for wired 'OR' applications. The recommended application circuit shown in Figure 36 (page 21) illustrates a typical gate drive implementation using the ACPL-333J. The following describes about driving IGBT. However, it is also applicable to MOSFET. Depending upon the MOSFET or IGBT gate threshold requirements, designers may want to adjust the VCC supply voltage (Recommended V_{CC} = 17.5V for IGBT and 12.5V for MOSFET).

The two supply bypass capacitors (0.1 µF) provide the large transient currents necessary during a switching transition. Because of the transient nature of the charging currents, a low current (5mA) power supply suffices. The desaturation diode D_{DESAT} 600V/1200V fast recovery type, t_{rr} below 75ns (e.g. ERA34-10) and capacitor C_{BLANK} are necessary external components for the fault detection circuitry. The gate resistor R_G serves to limit gate charge current and controls the IGBT collector voltage rise and fall times. The open collector fault output has a passive pull-up resistor R_F (2.1 kΩ) and a 1000 pF filtering capacitor, C_F. A 47 kΩ pull down resistor $R_{PULL-DOWN}$ on V_{OUT} provides a predictable high level output voltage (V_{OH}). In this application, the IGBT gate driver will shut down when a fault is detected and fault reset by next cycle of IGBT turn on. Application notes are mentioned at the end of this datasheet.

chanhvinh.com

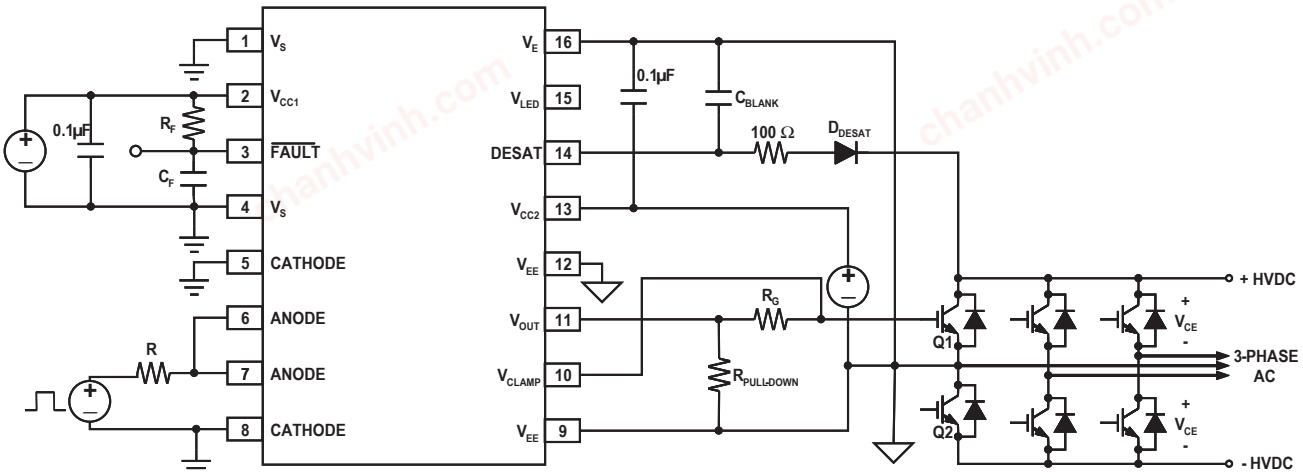

Figure 36. Recommended application circuit (Single Supply) with desaturation detection and active Miller Clamp

Description of Operation

Normal Operation

During normal operation, V_{OUT} of the ACPL-333J is controlled by input LED current IF (pins 5, 6, 7 and 8), with the IGBT collector-to-emitter voltage being monitored through DESAT. The FAULT output is high. See Figure 37.

Fault Condition

The DESAT pin monitors the IGBT V_{ce} voltage. When the voltage on the DESAT pin exceeds 6.5 V while the IGBT is on, V_{OUT} is slowly brought low in order to "softly" turn-off the IGBT and prevent large di/dt induced voltages. Also activated is an internal feedback channel which brings the FAULT output low for the purpose of notifying the micro-controller of the fault condition.

Fault Reset

Once fault is detected, the output will be soft-shut down to low. All input LED signals will be ignored during the fault period to allow the driver to completely soft shut-down the IGBT. For ACPL-333J, the driver will automatically reset the FAULT pin after a fixed mute time of 25µs (typical). See Figure 37.

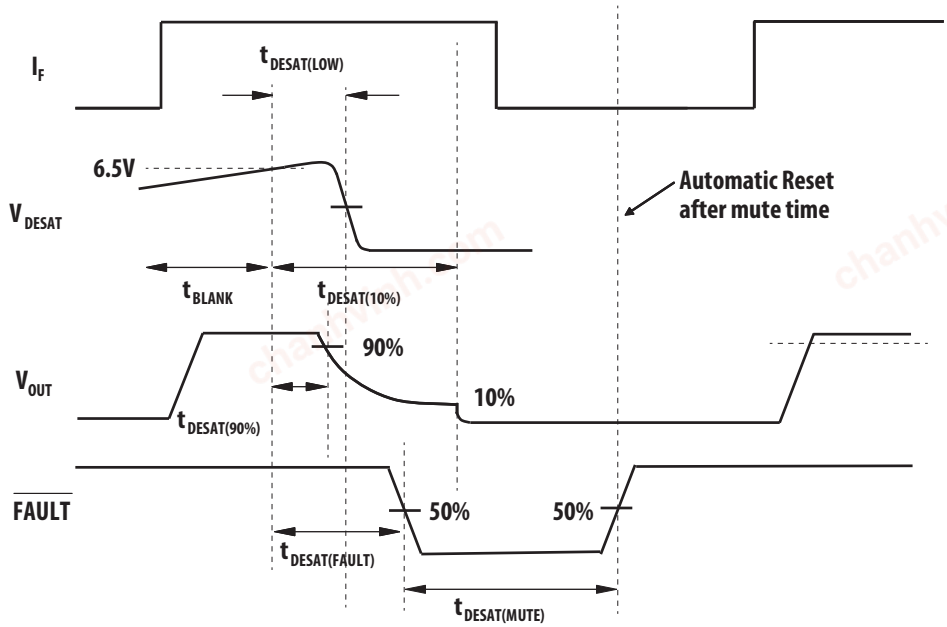

Figure 37. Fault Timing diagram (ACPL-333J)

chanhvinh.com

Output Control

The outputs (V_{OUT} and FAULT) of the ACPL-333J are controlled by the combination of I_F, UVLO and a detected IGBT Desat condition. Once UVLO is not active (V_{CC2} - V_E > V_{UVLO}), VOUT is allowed to go high, and the DESAT (pin 14) detection feature of the ACPL-333J will be the primary source of IGBT protection. Once V_{CC2} is increased from 0V to above V_{UVLO+}, DESAT will remain functional until V_{CC2} is decreased below V_{UVLO-}. Thus, the DESAT detection and UVLO features of the ACPL-333J work in conjunction to ensure constant IGBT protection.

Desaturation Detection and High Current Protection

The ACPL-333J satisfies these criteria by combining a high speed, high output current driver, high voltage optical isolation between the input and output, local IGBT desaturation detection and shut down, and an optically isolated fault status feedback signal into a single 16-pin surface mount package.

The fault detection method, which is adopted in the ACPL-333J, is to monitor the saturation (collector) voltage of the IGBT and to trigger a local fault shutdown sequence if the collector voltage exceeds a predetermined threshold. A small gate discharge device slowly reduces the high short circuit IGBT current to prevent damaging voltage spikes. Before the dissipated energy can reach destructive levels, the IGBT is shut off. During the off state of the IGBT, the fault detect circuitry is simply disabled to prevent false 'fault' signals.

The alternative protection scheme of measuring IGBT current to prevent desaturation is effective if the short circuit capability of the power device is known, but this method will fail if the gate drive voltage decreases enough to only partially turn on the IGBT. By directly measuring the collector voltage, the ACPL-333J limits the power dissipation in the IGBT even with insufficient gate drive voltage. Another more subtle advantage of the desaturation detection method is that power dissipation in the IGBT is monitored, while the current sense method relies on a preset current threshold to predict the safe limit of operation. Therefore, an overly conservative over current threshold is not needed to protect the IGBT.

Slow IGBT Gate Discharge during Fault Condition

When a desaturation fault is detected, a weak pull-down device in the ACPL-333J output drive stage will turn on to 'softly' turn off the IGBT. This device slowly discharges the IGBT gate to prevent fast changes in drain current that could cause damaging voltage spikes due to lead and wire inductance. During the slow turn off, the large output pull-down device remains off until the output voltage falls below V_{EE} + 2 Volts, at which time the large pull down device clamps the IGBT gate to V_{EE}.

DESAT Fault Detection Blanking Time

The DESAT fault detection circuitry must remain disabled for a short time period following the turn-on of the IGBT to allow the collector voltage to fall below the DESAT threshold. This time period, called the DESAT blanking time is controlled by the internal DESAT charge current, the DESAT voltage threshold, and the external DESAT capacitor.

The nominal blanking time is calculated in terms of external capacitance (C_{BLANK}), FAULT threshold voltage (V_{DESAT}), and DESAT charge current (I_{CHG}) as t_{BLANK} = C_{BLANK} x V_{DESAT} / I_{CHG}. The nominal blanking time with the recommended 100pF capacitor is 100pF * 6.5 V / 240 µA = 2.7 µsec.

The capacitance value can be scaled slightly to adjust the blanking time, though a value smaller than 100 pF is not recommended. This nominal blanking time represents the longest time it will take for the ACPL-333J to respond to a DESAT fault condition. If the IGBT is turned on while the collector and emitter are shorted to the supply rails (switching into a short), the soft shut-down sequence will begin after approximately 3 µsec. If the IGBT collector and emitter are shorted to the supply rails after the IGBT is already on, the response time will be much quicker due to the parasitic parallel capacitance of the DESAT diode. The recommended 100pF capacitor should provide adequate blanking as well as fault response times for most applications.

I_F	UVLO(V_{CC2}-V_E)	DESAT Function	Pin 3 (FAULT) Output	V_{OUT}
ON	Active	Not Active	High	Low
ON	Not Active	Active (with DESAT fault)	Low (FAULT)	Low
ON	Not Active	Active (no DESAT fault)	High (or no fault)	High
OFF	Active	Not Active	High	Low
OFF	Not Active	Not Active	High	Low

chanhvinh.com

Under Voltage Lockout

The ACPL-333J Under Voltage Lockout (UVLO) feature is designed to prevent the application of insufficient gate voltage to the IGBT by forcing the ACPL-333J output low during power-up. IGBTs typically require gate voltages of 15 V to achieve their rated $V_{CE(ON)}$ voltage. At gate voltages below 13 V typically, the $V_{CE(ON)}$ voltage increases dramatically, especially at higher currents. At very low gate voltages (below 10 V), the IGBT may operate in the linear region and quickly overheat. The UVLO function causes the output to be clamped whenever insufficient operating supply (V_{CC2}) is applied. Once V_{CC2} exceeds V_{UVLO+} (the positive-going UVLO threshold), the UVLO clamp is released to allow the device output to turn on in response to input signals. As V_{CC2} is increased from 0 V (at some level below V_{UVLO+}), first the DESAT protection circuitry becomes active. As V_{CC2} is further increased (above V_{UVLO+}), the UVLO clamp is released. Before the time the UVLO clamp is released, the DESAT protection is already active. Therefore, the UVLO and DESAT Fault detection feature work together to provide seamless protection regardless of supply voltage (V_{CC2}).

Active Miller Clamp

A Miller clamp allows the control of the Miller current during a high dV/dt situation and can eliminate the use of a negative supply voltage in most of the applications. During turn-off, the gate voltage is monitored and the clamp output is activated when gate voltage goes below 2V (relative to V_{EE}). The clamp voltage is V_{OL}+2.5V typ for a Miller current up to 1100mA. The clamp is disabled when the LED input is triggered again.

Other Recommended Components

The application circuit in Figure 36 includes an output pull-down resistor, a DESAT pin protection resistor, a FAULT pin capacitor, and a FAULT pin pullup resistor and Active Miller Clamp connection.

Output Pull-Down Resistor

During the output high transition, the output voltage rapidly rises to within 3 diode drops of V_{CC2}. If the output current then drops to zero due to a capacitive load, the output voltage will slowly rise from roughly V_{CC2}-3(V_{BE}) to V_{CC2} within a period of several microseconds. To limit the output voltage to V_{CC2}-3(V_{BE}), a pull-down resistor, $R_{PULL-DOWN}$ between the output and V_{EE} is recommended to sink a static current of several 650 µA while the output is high. Pull-down resistor values are dependent on the amount of positive supply and can be adjusted according to the formula, $R_{pull-down}$ = [V_{CC2}-3 * (V_{BE})] / 650 µA.

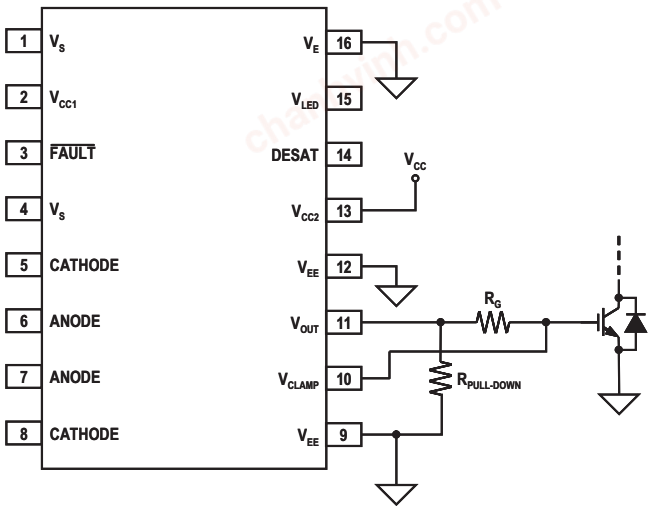

Figure 38. Output pull-down resistor.

DESAT Pin Protection Resistor

The freewheeling of flyback diodes connected across the IGBTs can have large instantaneous forward voltage transients which greatly exceed the nominal forward voltage of the diode. This may result in a large negative voltage spike on the DESAT pin which will draw substantial current out of the driver if protection is not used. To limit this current to levels that will not damage the driver IC, a 100 ohm resistor should be inserted in series with the DESAT diode. The added resistance will not alter the DESAT threshold or the DESAT blanking time.

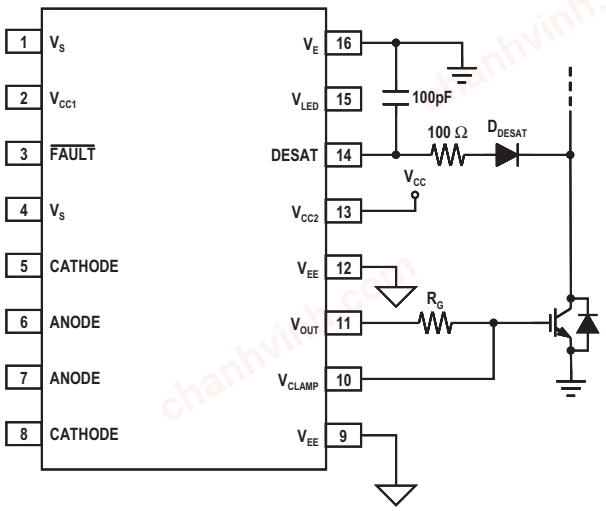

Figure 39. DESAT pin protection.

chanhvinh.com

Capacitor on FAULT Pin for High CMR

Rapid common mode transients can affect the fault pin voltage while the fault output is in the high state. A 1000 pF capacitor should be connected between the fault pin and ground to achieve adequate CMOS noise margins at the specified CMR value of 50 kV/µs.

Pull-up Resistor on FAULT Pin

The FAULT pin is an open collector output and therefore requires a pull-up resistor to provide a high-level signal. Also the FAULT output can be wire 'OR'ed together with other types of protection (e.g. over-temperature, over-voltage, over-current) to alert the microcontroller.

Other Possible Application Circuit (Output Stage)

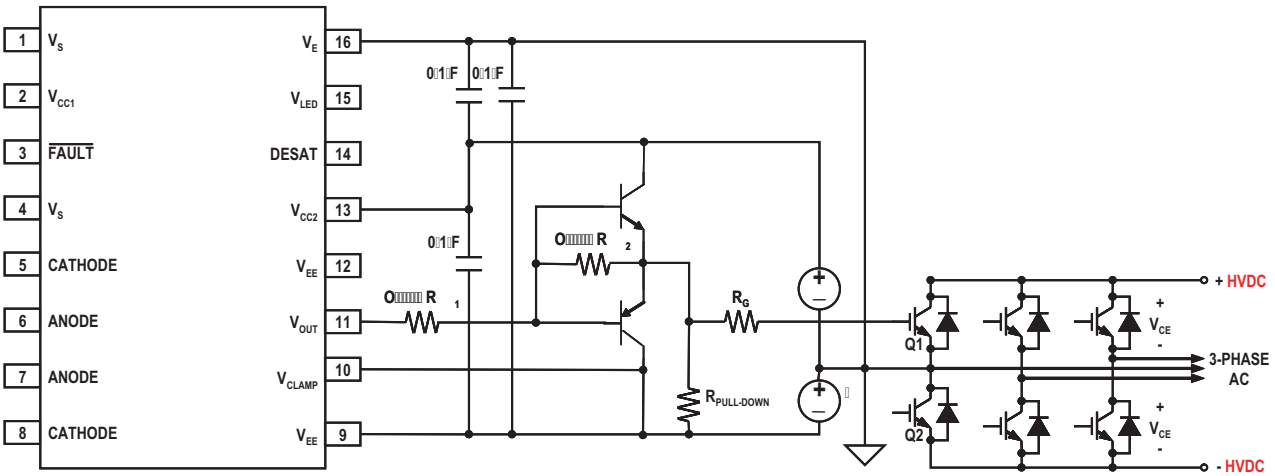

Figure 40. IGBT drive with negative gate drive, external booster and desaturation detection (V_{CLAMP} should be connected to V_{EE} when it is not used) VCLAMP is used as secondary gate discharge path. * indicates component required for negative gate drive topology

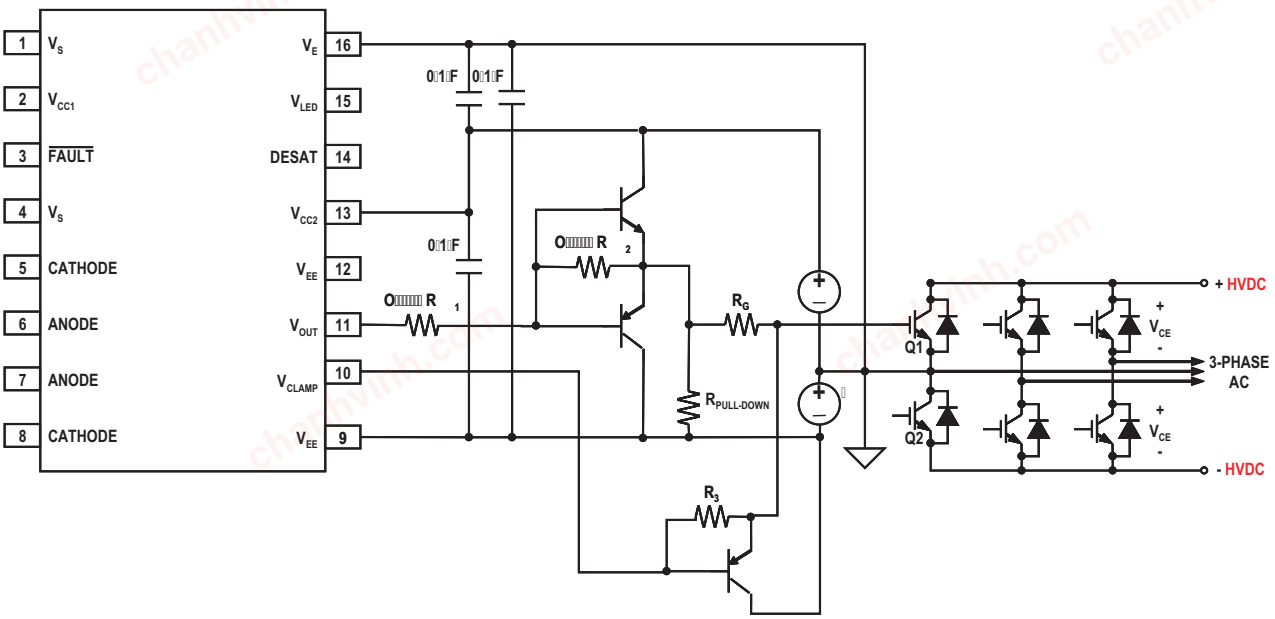

Figure 41. Large IGBT drive with negative gate drive, external booster. V_{CLAMP} control secondary discharge path for higher power application.

chanhvinh.com

Thermal Model

The ACPL-333J is designed to dissipate the majority of the heat through pins 1, 4, 5 & 8 for the input IC and pins 9 & 12 for the output IC. (There are two V_{EE} pins on the output side, pins 9 and 12, for this purpose.) Heat flow through other pins or through the package directly into ambient are considered negligible and not modeled here.

In order to achieve the power dissipation specified in the absolute maximum specification, it is imperative that pins 5, 9, and 12 have ground planes connected to them. As long as the maximum power specification is not exceeded, the only other limitation to the amount of power one can dissipate is the absolute maximum junction temperature specification of 125°C. The junction temperatures can be calculated with the following equations:

$$T_{ji} = P_i (\theta_{i5} + \theta_{5A}) + T_A$$

$$T_{jo} = Po (\theta_{o9,12} + \theta_{9,12A}) + T_A$$

where P_i = power into input IC and P_o = power into output IC. Since θ_{5A} and $\theta_{9,12A}$ are dependent on PCB layout and airflow, their exact number may not be available. Therefore, a more accurate method of calculating the junction temperature is with the following equations:

$$T_{ji} = P_i \theta_{i5} + T_{P5}$$

$$T_{jo} = P_o \theta_{o9,12} + T_{P9,12}$$

These equations, however, require that the pin 5 and pins 9, 12 temperatures be measured with a thermal couple on the pin at the ACPL-333J package edge.

If the calculated junction temperatures for the thermal model in Figure 42 is higher than 125°C, the pin temperature for pins 9 and 12 should be measured (at the package edge) under worst case operating environment for a more accurate estimate of the junction temperatures.

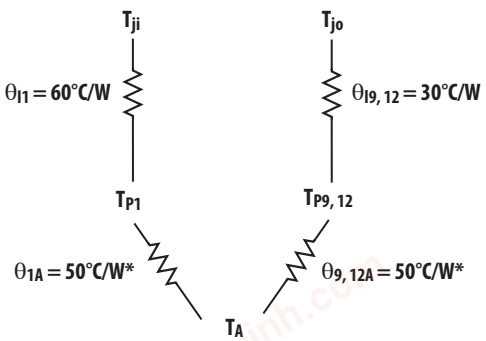

T_{ji} = junction temperature of input side IC
T_{jo} = junction temperature of output side IC
T_{P5} = pin 5 temperature at package edge
$T_{P9,12}$ = pin 9 and 12 temperature at package edge
θ_{I5} = input side IC to pin 5 thermal resistance
$\theta_{o9,12}$ = output side IC to pin 9 and 12 thermal resistance
θ_{5A} = pin 5 to ambient thermal resistance
$\theta_{9,12A}$ = pin 9 and 12 to ambient thermal resistance
***The θ_{5A} and $\theta_{9,12A}$ values shown here are for PCB layouts with reasonable air flow. This value may increase or decrease by a factor of 2 depending on PCB layout and/or airflow.**

Figure 42. ACPL-333J Thermal Model

Related Application Notes

AN5314 – Active Miller Clamp

AN5315 – "Soft" Turn-off Feature

AN1043 – Common-Mode Noise : Sources and Solutions

AV02-0310EN - Plastic Optocouplers Product ESD and Moisture Sensitivity

Avago, Avago Technologies, and the A logo are trademarks of Avago Technologies in the United States and other countries.
Data subject to change. Copyright © 2005-2015 Avago Technologies. All rights reserved. Obsoletes AV02-0726EN
AV02-1087EN - March 6, 2015