chanhvinh.com

BROADCOM®

Data Sheet

ACPL-077L

Low-Power 3.3V/5V High-Speed CMOS Optocoupler Design for System-Level Reliability

Description

The Broadcom® ACPL-077L optocoupler utilizes the latest CMOS IC technology to achieve outstanding speed and low power performance of minimum 25-MBd data rate and 6-ns maximum pulse width distortion with enhanced reliability relative to system-level IEC 61000-4-X testing (ESD/Burst/Surge).

Available in SO-8 package, the basic building blocks of ACPL-077L are a CMOS LED driver IC, a high-speed LED, and a CMOS detector IC. A CMOS logic input signal controls the LED driver IC, which supplies current to the LED. The detector IC incorporates an integrated photodiode, a high-speed transimpedance amplifier, and a voltage comparator with an output driver.

CAUTION! It is advised that normal static precautions be taken in handling and assembly of this component to prevent damage and/or degradation, which may be induced by ESD. The components featured in this data sheet are not to be used in military or aerospace applications or environments.

Features

- Enhance reliability relative to system-level IEC 61000-4-Xtesting (ESD/Burst/Surge)
- 3.3V and 5V CMOS compatibility
- CMOS buffer input
- Allow level shifting functionality
- High speed: DC to 25 MBd
- 35-kV/µs minimum common mode rejection (CMR) at V_{CM} = 1000V
- Guaranteed AC and DC performance over wide temperature:–40 to +105°C
- Safety and regulatory approvals:
  - UL recognized:
    - 3750 V_{rms} for 1 min. per UL1577
  - CSA component acceptance notice #5
  - IEC/EN/DIN EN 60747-5-5:
    - V_{IORM} = 567 V_{peak} for Option 060E
- Lead-free option available

Applications

- Digital fieldbus isolation: CC-Link, DeviceNet, Profibus, SDS
- Multiplexed data transmission
- General instrument and data acquisition
- Computer peripheral interface
- Microprocessor system interface

chanhvinh.com

Functional Diagram

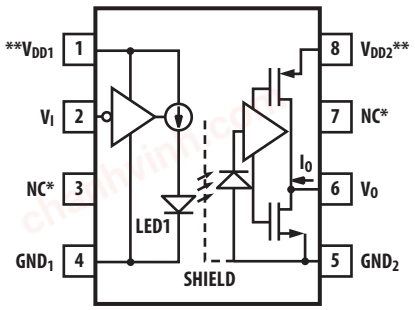

* Pin 3 is multiplexed as a test pin that can connect to V_{DD} or left unconnected. Pin 7 is not connected internally.

** A 0.01 µF to 0.1 µF bypass capacitor must be connected as close as possible between pins V_{DD1} and GND_1, and V_{DD2} and GND_2.

Truth Table

V_I	LED1	V_O
HIGH	OFF	HIGH
LOW	ON	LOW

Ordering Information

ACPL-077L is UL Recognized with 3750 V_{rms} for 1 minute per UL1577.

Part Number	Option RoHS Compliant	Package	Surface Mount	Tape and Reel	IEC/EN/DIN EN 60747-5-5	Quantity
ACPL-077L	-000E	SO-8	X			100 per tube
	-060E		X		X	100 per tube
	-500E		X	X		1500 per reel
	-560E		X	X	X	1500 per reel

To order, choose a part number from the part number column and combine with the desired option from the option column to form an order entry.

Example 1:

ACPL-077L-500E to order product of Mini-flat Surface Mount 8-pin package in Tape and Reel packaging with RoHS compliant.

Option data sheets are available. Contact your Broadcom sales representative or authorized distributor for information.

Regulatory Information

The ACPL-077L will be approved by the following organizations:

- **UL —** Approval under UL 1577, component recognition program up to V_{ISO} = 3750 V_{RMS}.
- **CSA —** Approval under CSA component acceptance notice #5.
- **IEC/EN/DIN EN 60747-5-5 — (Option 060E only)**

chanhvinh.com

Package Outline Drawings

ACPL-077L SO-8 Package

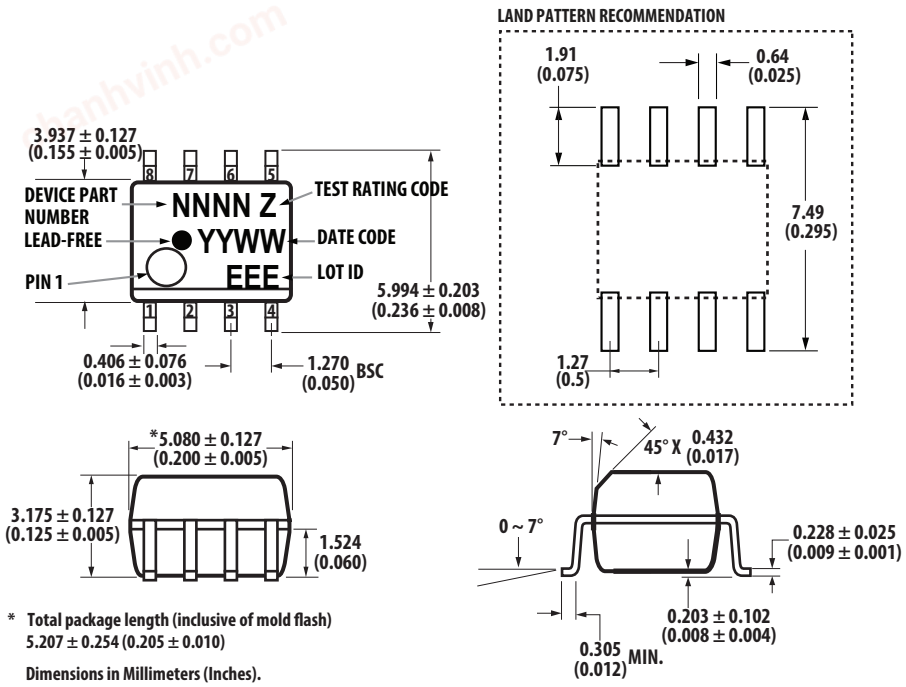

* Total package length (inclusive of mold flash)
5.207 ± 0.254 (0.205 ± 0.010)

Dimensions in Millimeters (Inches).

Note: Floating lead protrusion is 0.15 mm (6 mils) max.
Lead coplanarity = 0.10 mm (0.004 inches) max.
Option number 500 not marked.

Solder Reflow Profile

Recommended reflow condition as per JEDEC Standard, J-STD-020 (latest revision). Non-Halide Flux should be used.

chanhvinh.com

Insulation and Safety Related Specifications

Parameter	Symbol	ACPL-077L	Unit	Conditions
Minimum External Air Gap (Clearance)	L(I01)	4.9	mm	Measured from input terminals to output terminals, shortest distance through air.
Minimum External Tracking (Creepage)	L(I02)	4.8	mm	Measured from input terminals to output terminals, shortest distance path along body.
Minimum Internal Plastic Gap (Internal Clearance)		0.08	mm	Through insulation distance conductor to conductor, usually the straight line distance thickness between the emitter and detector.
Tracking Resistance (Comparative Tracking Index)	CTI	175	V	DIN IEC 112/VDE 0303 Part 1.
Isolation Group		IIIa		Material Group (DIN VDE 0110, 1/89, Table 1).

IEC/EN/DIN EN 60747-5-5 Insulation Characteristics (Option 060E)

Description	Symbol	Characteristic ACPL-077L	Unit
Installation Classification per DIN VDE 0110/39, Table 1			
For Rated Mains Voltage ≤ 150V_{rms}		I – IV	
For Rated Mains Voltage ≤ 300V_{rms}		I – III	
For Rated Mains Voltage ≤ 600V_{rms}		I – II	
Climatic Classification		55/105/21	
Pollution Degree (DIN VDE 0110/39)		2	
Maximum Working Insulation Voltage	V_{IORM}	567	V_{peak}
Input to Output Test Voltage, Method b[a] V_{IORM} x 1.875 = V_{PR}, 100% Production Test with t_m = 1s, Partial Discharge < 5 pC	V_{PR}	1063	V_{peak}
Input to Output Test Voltage, Method a[a] V_{IORM} x 1.6 = V_{PR}, Type and Sample Test, t_m = 10s, Partial Discharge < 5 pC	V_{PR}	907	V_{peak}
Highest Allowable Overvoltage (Transient Overvoltage t_{ini} = 60s)	V_{IOTM}	6000	V_{peak}
Safety-Limiting Values – Maximum Values Allowed in the Event of a Failure			
Case Temperature	T_S	150	°C
Input Current[b]	$I_{S, INPUT}$	150	mA
Output Power	$P_{S, OUTPUT}$	600	mW
Insulation Resistance at T_S, V_{IO} = 500V	R_S	≥10^9	Ω

a. Refer to the optocoupler section of the Isolation and Control Component Designer's Catalog, under Product Safety Regulations section (IEC/EN/DIN EN 60747-5-5) for a detailed description of Method a and Method b partial discharge test profiles.

b. Refer to figure 10 for dependence of P_S and I_S on ambient temperature.

NOTE: These optocouplers are suitable for *safe electrical isolation* only within the safety limit data. Maintenance of the safety data is ensured by means of protective circuits.

chanhvinh.com

Absolute Maximum Ratings

Parameter	Symbol	Min.	Max.	Unit
Storage Temperature	T_S	–55	125	°C
Operating Temperature	T_A	–40	105	°C
Supply Voltages	V_{DD1}, V_{DD2}	0	6.5	V
Input Voltage	V_I	–0.5	V_{DD1} + 0.5	V
Output Voltage	V_O	–0.5	V_{DD2} + 0.5	V
Average Output Current	I_O	—	10	mA
Lead Solder Temperature	T_{LS}	260° C for 10 sec., 1.6 mm below seating plane		
Solder Reflow Temperature Profile	See Solder Reflow Profile section.			

Recommended Operating Conditions

Parameter	Symbol	Min.	Max.	Unit
Operating Temperature	T_A	–40	105	°C
Supply Voltages (3.3V)	V_{DD1}, V_{DD2}	3.0	3.6	V
Supply Voltages (5V)	V_{DD1}, V_{DD2}	4.5	5.5	V
Logic High Input Voltage	V_{IH}	0.7 x V_{DD1}	V_{DD1}	V
Logic Low Input Voltage	V_{IL}	0	0.3 x V_{DD1}	V
Input Signal Rise and Fall Times	t_{ir}, t_{if}	—	1.0	ms

Electrical Specifications

Over recommended temperature (T_A = –40°C to 105°C) and supply voltage (4.5V ≤ V_{DD1} ≤ 5.5V, 4.5V ≤ V_{DD2} ≤ 5.5V), (3V ≤ V_{DD1} ≤ 3.6V, 3V ≤ V_{DD2} ≤ 3.6V), (4.5V ≤ V_{DD1} ≤ 5.5V, 3V ≤ V_{DD2} ≤ 3.6V) and (3V ≤ V_{DD1} ≤ 3.6V, 4.5V ≤ V_{DD2} ≤ 5.5V). All typical specifications are at V_{DD1} = V_{DD2} = +3.3V, T_A = 25°C.

Parameter	Symbol	Min.	Typ.	Max.	Unit	Test Conditions
Logic Low Input Supply Current[a]	I_{DD1L}	—	5.5	8	mA	V_I = 0V; Figure 1
Logic High Input Supply Current[a]	I_{DD1H}	—	0.6	2	mA	V_I = V_{DD1}; Figure 2
Logic Low Output Supply Current	I_{DD2L}	—	1.5	2.5	mA	V_I = 0V; Figure 3
Logic High Output Supply Current	I_{DD2H}	—	1.5	2.5	mA	V_I = V_{DD1}; Figure 4
Input Current	I_I	–10	—	10	µA	
Logic High Output Voltage	V_{OH}	2.9	3.3	—	V	I_O = –20 µA, V_I = V_{IH}, V_{DD2} = 3.3V
		1.9	2.9			I_O = –4 mA, V_I = V_{IH}, V_{DD2} = 3.3V
		4.0	4.7	—	V	I_O = –4 mA, V_I = V_{IH}, V_{DD2} = 5.0V
Logic Low Output Voltage	V_{OL}	—	0	0.1	V	I_O = 20 µA, V_I = V_{IL}
		—	0.35	1.0	V	I_O = 4 mA, V_I = V_{IL}

a. The LED is ON when V_I is low and OFF when V_I is high.

chanhvinh.com

Switching Specifications

Over recommended temperature (T_A = –40°C to 105°C) and supply voltage (4.5V ≤ V_{DD1} ≤ 5.5V, 4.5V ≤ V_{DD2} ≤ 5.5V), (3V ≤ V_{DD1} ≤ 3.6V, 3V ≤ V_{DD2} ≤ 3.6V), (4.5V ≤ V_{DD1} ≤ 5.5V, 3V ≤ V_{DD2} ≤ 3.6V) and (3V ≤ V_{DD1} ≤ 3.6V, 4.5V ≤ V_{DD2} ≤ 5.5V). All typical specifications are at V_{DD1} = V_{DD2} = +3.3V, T_A = 25°C.

Parameter	Symbol	Min.	Typ.	Max.	Unit	Test Conditions
Propagation Delay Time to Logic Low Output[a]	t_{PHL}	—	24	40	ns	C_L = 15 pF, CMOS Signal Levels; Figure 5 and Figure 6.
Propagation Delay Time to Logic High Output[a]	t_{PLH}	—	23	40	ns	C_L = 15 pF, CMOS Signal Levels; Figure 5 and Figure 6.
Pulse Width	t_{PW}	40	—	—	ns	C_L = 15 pF, CMOS Signal Levels.
Maximum Data Rate		—	—	25	MBd	C_L = 15 pF, CMOS Signal Levels.
Pulse Width Distortion[b] $\lvert t_{PHL} - t_{PLH} \rvert$	|PWD|	—	1	6	ns	C_L = 15 pF, CMOS Signal Levels; Figure 7 and Figure 8.
Propagation Delay Skew[c]	t_{PSK}	—	—	15	ns	C_L = 15 pF, CMOS Signal Levels.
Output Rise Time (10% to 90%)	t_R	—	4	—	ns	C_L = 15 pF, CMOS Signal Levels, Figure 9.
Output Fall Time (90% to 10%)	t_F	—	3	—	ns	
Common Mode Transient Immunity at Logic High Output[d]	$\lvert CM_H \rvert$	35	50	—	kV/µs	V_{CM} = 1000V, T_A = 25°C, V_I = V_{DD1}, V_O > 0.8 × V_{DD2}.
Common Mode Transient Immunity at Logic Low Output[d]	$\lvert CM_L \rvert$	35	50	—	kV/µs	V_{CM} = 1000V, T_A = 25°C, V_I = 0V, V_O < 0.8V.

a. t_{PHL} propagation delay is measured from the 50% level on the falling edge of the V_I signal to the 50% level of the falling edge of the V_O signal. t_{PLH} propagation delay is measured from the 50% level on the rising edge of the V_I signal to the 50% level of the rising edge of the V_O signal.

b. PWD is defined as $\lvert t_{PHL} - t_{PLH} \rvert$. %PWD (percent pulse width distortion) is equal to the PWD divided by pulse width.

c. t_{PSK} is equal to the magnitude of the worst-case difference in t_{PHL} and/or t_{PLH} that will be seen between units at any given temperature within the recommended operating conditions.

d. CM_H is the maximum common mode voltage slew rate that can be sustained while maintaining V_O > 0.8 V_{DD2}. CM_L is the maximum common mode voltage slew rate that can be sustained while maintaining V_O < 0.8V. The common mode voltage slew rates apply to both rising and falling common mode voltage edges.

Package Characteristics

All typical specifications are at T_A = 25°C.

Parameter	Symbol	Min.	Typ.	Max.	Unit	Test Conditions
Input-Output Insulation [a, b, c]	V_{ISO}	3750	—	—	V_{rms}	RH ≤ 50% for 1 min, T_A = 25°C
Input-Output Resistance[a]	R_{I-O}	—	10^{12}	—	Ω	V_{I-O} = 500V
Input-Output Capacitance	C_{I-O}	—	0.6	—	pF	f = 1 MHz, T_A = 25°C
Input Capacitance[d]	C_I	—	3.0	—	pF	

a. Device considered a two-terminal device: pins 1, 2, 3, and 4 shorted together and pins 5, 6, 7, and 8 shorted together.

b. In accordance with UL1577, each ACPL-077L is proof tested by applying an insulation test voltage ≥ 4500 V_{RMS} for 1 second (leakage detection current limit, I_{I-O} ≤ 5 µA).

c. The Input-Output Momentary Withstand Voltage is a dielectric voltage rating that should not be interpreted as an input-output continuous voltage rating. For the continuous voltage rating, refer to your equipment level safety specification or Broadcom Application Note 1074, Optocoupler Input-Output Endurance Voltage.

d. C_I is the capacitance measured at pin 2 (V_I).

chanhvinh.com

Figure 1: Typical Logic Low Input Supply Current vs. Temperature

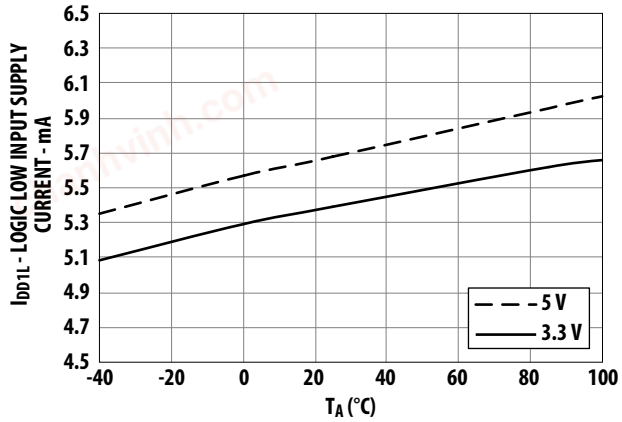

Figure 2: Typical Logic High Input Supply Current vs. Temperature

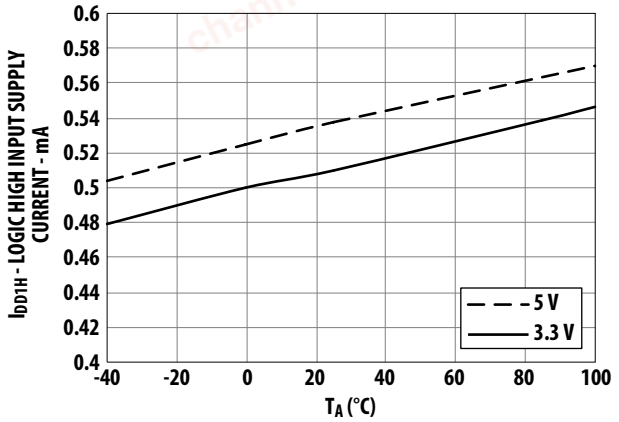

Figure 3: Typical Logic Low Output Supply Current vs. Temperature

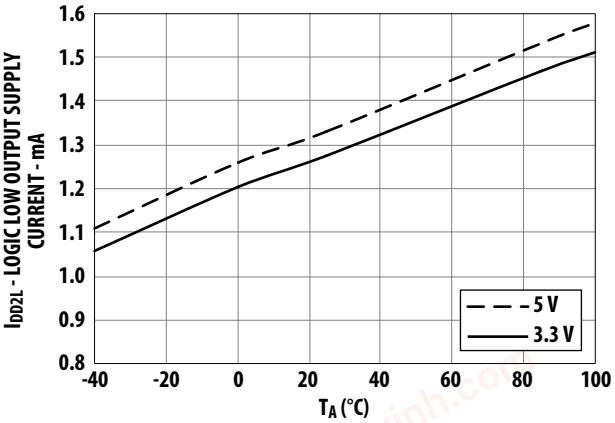

Figure 4: Typical Logic High Output Supply Current vs. Temperature

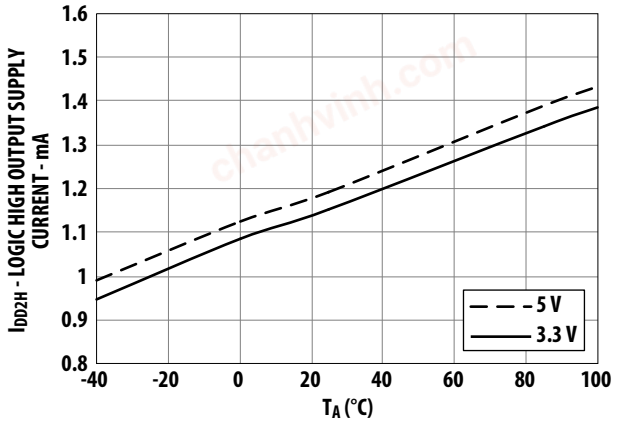

Figure 5: Typical Propagation Delay vs. Temperature at 3.3V Supply Voltage

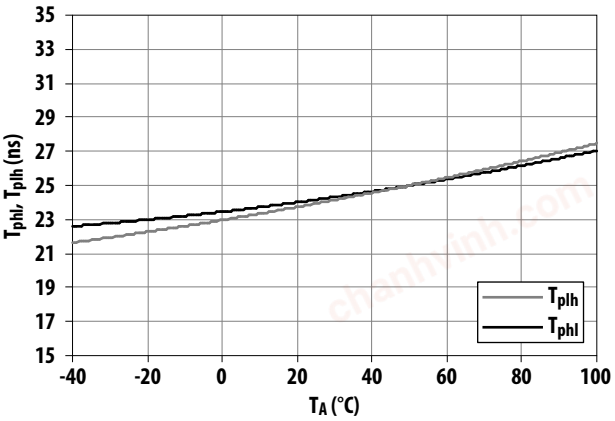

Figure 6: Typical Propagation Delays vs. Load Capacitance at 3.3V Supply Voltage

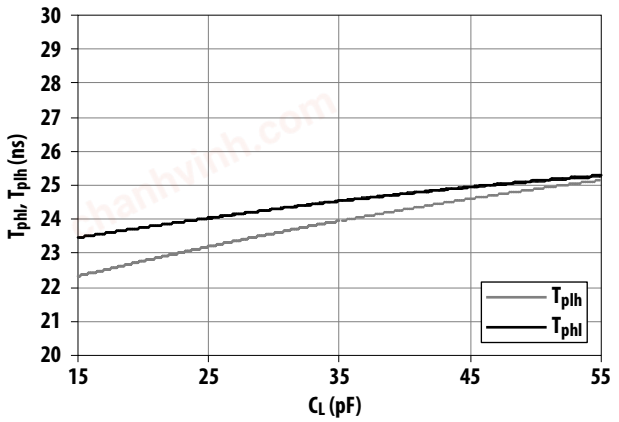

chanhvinh.com

Figure 7: Typical Pulse Width Distortion vs Temperature at 3.3V Supply Voltage

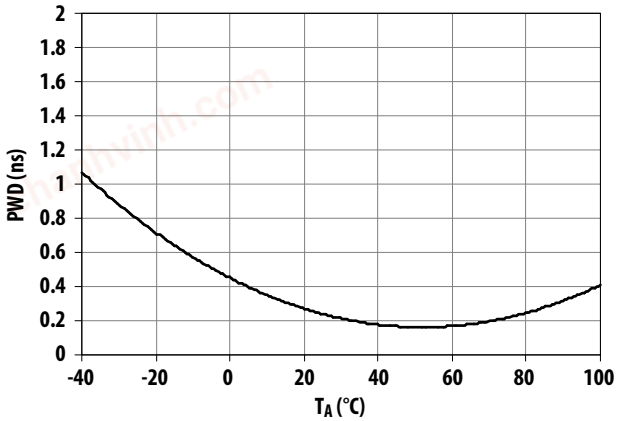

Figure 8: Typical Pulse Width Distortion vs Load Capacitance at 3.3V Supply Voltage

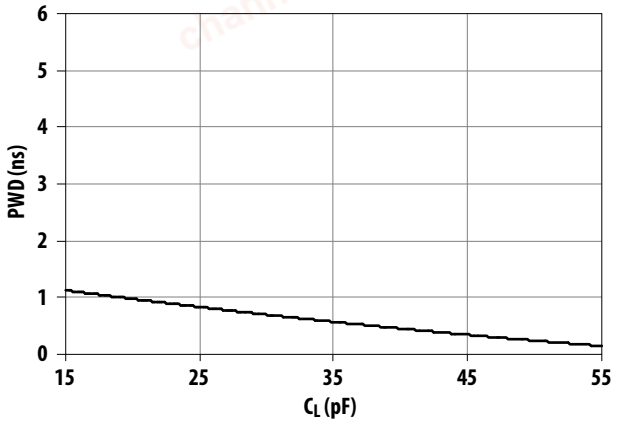

Figure 9: Typical Rise and Fall Time vs Temperature at 3.3V Supply Voltage

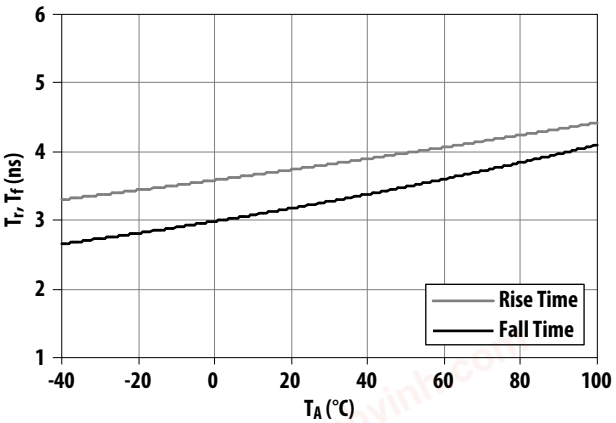

Figure 10: Thermal Derating Curve, Dependence of Safety Limiting Value with Case Temperature per IEC/EN/DIN EN 60747-5-5

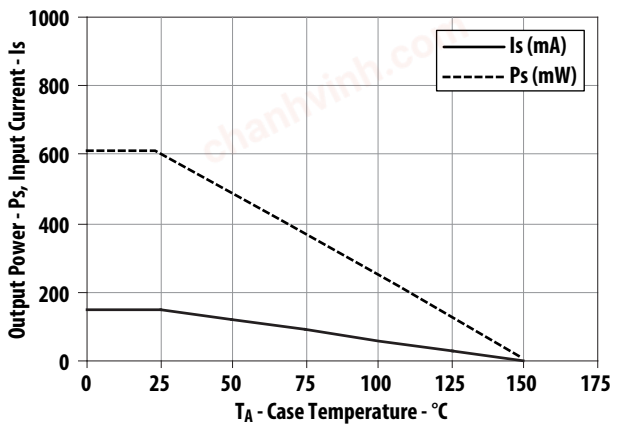

chanhvinh.com

Application Information

Bypassing and PC Board Layout

The ACPL-077L optocoupler is extremely easy to use. No external interface circuitry is required because ACPL-077L uses high-speed CMOS IC technology, allowing CMOS logic to be connected directly to the inputs and outputs.

As shown in Figure 11, the only external components required for proper operation are two bypass capacitors. Capacitor values should be between 0.01 µF and 0.1 µF. Each capacitor should be placed as close as possible to the input and output power-supply pins of the optocoupler.

Figure 11: Recommended Circuit Diagram

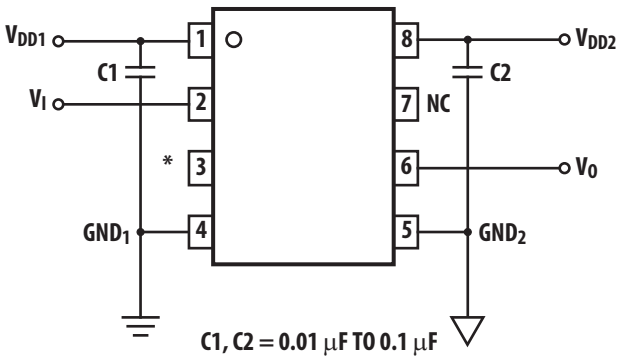

* Pin 3 is multiplexed as a test pin that can connect to VDD or left unconnected. Pin 7 is not connected internally.

chanhvinh.com

Broadcom, the pulse logo, Connecting everything, Avago Technologies, Avago, and the A logo are among the trademarks of Broadcom and/or its affiliates in the United States, certain other countries and/or the EU.

Copyright © 2017–2018 Broadcom. All Rights Reserved.

The term “Broadcom” refers to Broadcom Limited and/or its subsidiaries. For more information, please visit www.broadcom.com.

Broadcom reserves the right to make changes without further notice to any products or data herein to improve reliability, function, or design. Information furnished by Broadcom is believed to be accurate and reliable. However, Broadcom does not assume any liability arising out of the application or use of this information, nor the application or use of any product or circuit described herein, neither does it convey any license under its patent rights nor the rights of others.

BROADCOM®

Lead (Pb) Free
RoHS 6 fully compliant
RoHS 6 fully compliant options available;
-xxxE denotes a lead-free product