chanhvinh.com

ACPL-772L and ACPL-072L

3.3V/5V High Speed CMOS Optocoupler

AVAGO TECHNOLOGIES

Data Sheet

Lead (Pb) Free
RoHS 6 fully compliant

RoHS 6 fully compliant options available;
-xxxE denotes a lead-free product

Description

Available in either an 8-pin DIP or SO-8 style respectively, the ACPL-772L or ACPL-072L optocouplers utilize the latest CMOS IC technology to achieve outstanding speed performance of minimum 25MBd data rate and 6ns maximum pulse width distortion.

Basic building blocks of this family of products are a CMOS LED driver IC, a high speed LED and a CMOS detector IC. A CMOS logic input signal controls the LED driver IC, which supplies current to the LED. The detector IC incorporates an integrated photodiode, a high speed transimpedance amplifier, and a voltage comparator with an output driver.

Functional Diagram

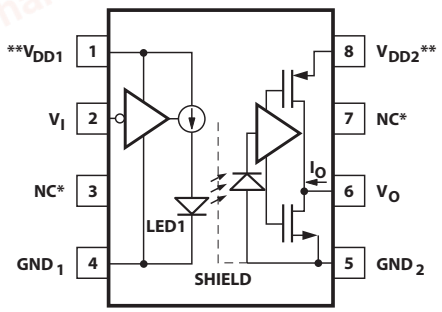

* Pin 3 is the anode of the internal LED and must be left unconnected for guaranteed datasheet performance. Pin 7 is not connected internally.

** A 0.1uF bypass capacitor must be connected between pins 1 and 4, and 5 and 8.

TRUTH TABLE (POSITIVE LOGIC)

V_I, INPUT	LED1	V_O, OUTPUT
H	OFF	H
L	ON	L

Features

- Dual voltage operation (3.3V and 5V)
- Allow level shifting functionality
- Support high Speed datarate of 25 MBd
- Wide Temperature operation
- CMOS output and buffer input
- Compatible with CMOS and TTL logic level
- Lower power consumption with 3.3V supply
- Good AC performance with lower pulse width distortion
- Lead-free option available

Specifications

- 3.3V and 5V CMOS Compatibility
- High Speed: DC to 25 MBd
- 6ns max. Pulse Width Distortion
- 40 ns max. Prop. Delay
- 20 ns max. Prop. Delay Skew
- 10 kV/μs min. Common Mode Rejection
- -40 °C to 105 °C Temperature Range
- Safety and Regulatory Approvals:
  UL Recognised
  - 5000V_{rms} for 1 min. per UL1577 for ACPL-772L for option 020
  - 3750V_{rms} for 1 min. per UL1577 for ACPL-072L

  CSA Component Acceptance Notice #5
  IEC/EN/DIN EN 60747-5-2
  - V_{IORM} = 630 V_{peak} for ACPL-772L Option 060
  - V_{IORM} = 560 V_{peak} for ACPL-072L Option 060

Applications

- Digital Fieldbus Isolation: DeviceNet, Profibus, SDS
- Multiplexed Data Transmission
- General Instrument and Data Acquisition
- Computer Peripheral interface
- Microprocessor System Interface

CAUTION: It is advised that normal static precautions be taken in handling and assembly of this component to prevent damage and/or degradation, which may be induced by ESD.

chanhvinh.com

Device Selection Guide

8-Pin DIP (300 Mil)	Small Outline SO-8
ACPL-772L	ACPL-072L

Ordering Information

ACPL-072L and ACPL-772L are UL Recognized with 3750 Vrms for 1 minute per UL1577.

Part number	Option		Package	Surface Mount	Gull Wing	Tape & Reel	UL 5000 Vrms/ 1 Minute rating	IEC/EN/DIN EN 60747-5-2	Quantity
	RoHS Compliant	Non RoHS Compliant							
ACPL-772L	-000E	-	300mil DIP-8						50 per tube
	-300E	-		X	X				50 per tube
	-500E	-		X	X	X			1000 per reel
	-020E	-					X		50 per tube
	-320E	-		X	X		X		50 per tube
	-520E	-		X	X	X	X		1000 per reel
	-060E	-						X	50 per tube
	-360E	-		X	X			X	50 per tube
	-560E	-		X	X	X		X	1000 per reel
ACPL-072L	-000E	No option	SO-8	X					100 per tube
	-500E	-500		X		X			1500 per reel
	-060E	-060		X				X	100 per tube
	-560E	-560		X		X		X	1500 per reel

To order, choose a part number from the part number column and combine with the desired option from the option column to form an order entry.

Example 1:

ACPL-772L-560E to order product of Gull Wing Surface Mount package in Tape and Reel packaging with IEC/EN/DIN EN 60747-5-2 Safety Approval in RoHS compliant.

Example 2:

ACPL-072L to order product of Small Outline SO-8 package in tube packaging and non RoHS compliant.

Option datasheets are available. Contact your Avago sales representative or authorized distributor for information.

chanhvinh.com

Package Dimensions

ACPL-772L 8-Pin DIP Package

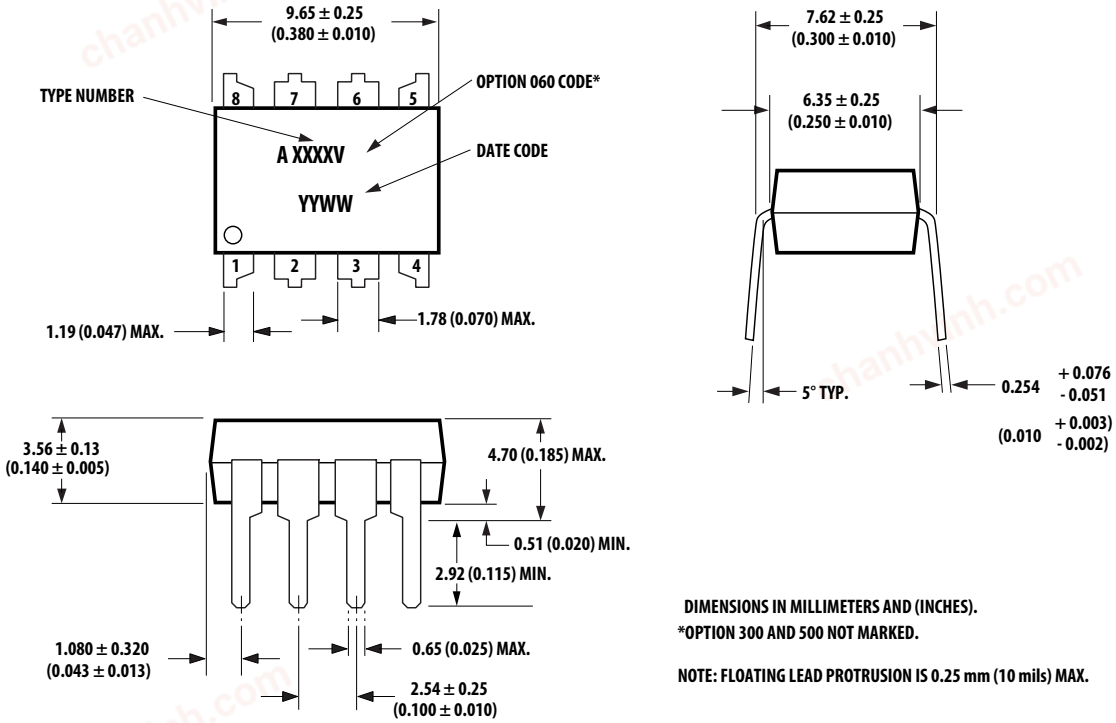

DIMENSIONS IN MILLIMETERS AND (INCHES).
*OPTION 300 AND 500 NOT MARKED.

NOTE: FLOATING LEAD PROTRUSION IS 0.25 mm (10 mils) MAX.

ACPL-772L Package with Gull Wing Surface Mount Option 300

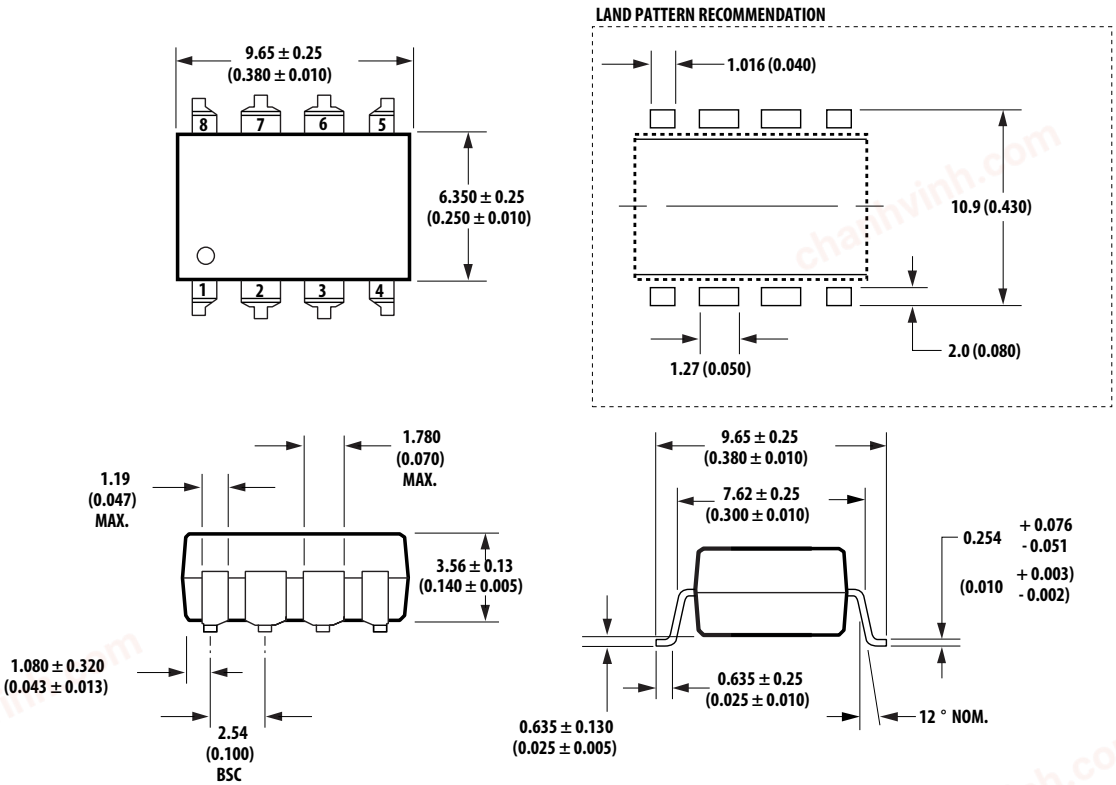

DIMENSIONS IN MILLIMETERS (INCHES).
LEAD COPLANARITY = 0.10 mm (0.004 INCHES).

NOTE: FLOATING LEAD PROTRUSION IS 0.25 mm (10 mils) MAX.

chanhvinh.com

ACPL-072L Small Outline SO-8 Package

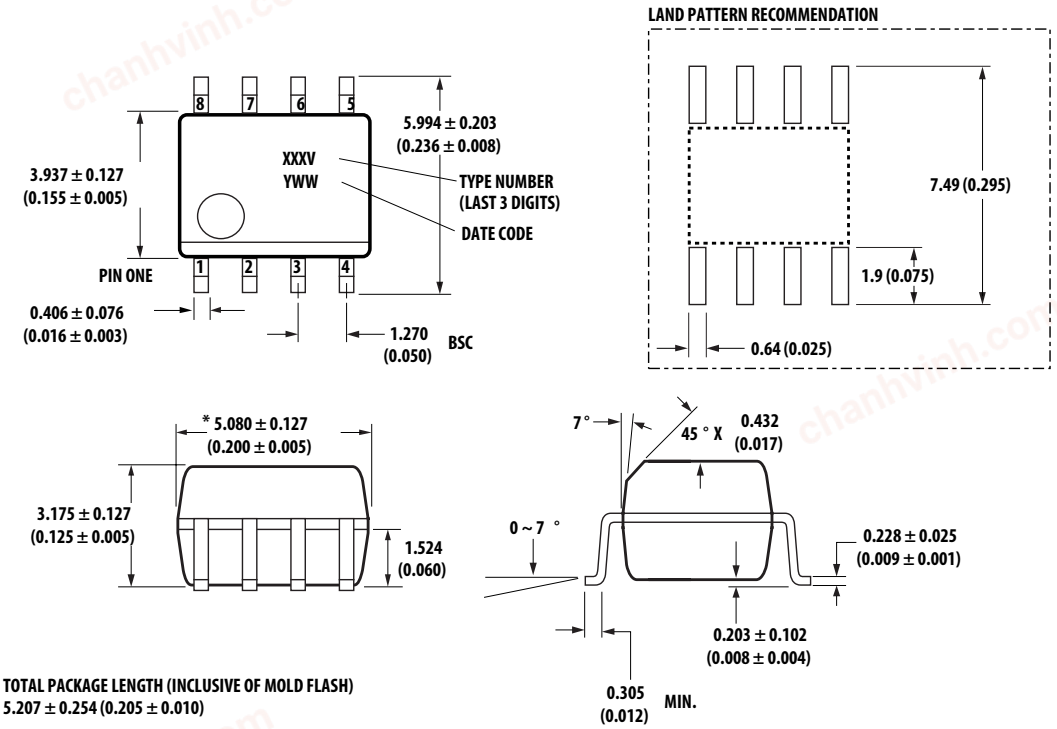

* TOTAL PACKAGE LENGTH (INCLUSIVE OF MOLD FLASH)
5.207 ± 0.254 (0.205 ± 0.010)

DIMENSIONS IN MILLIMETERS (INCHES).
LEAD COPLANARITY = 0.10 mm (0.004 INCHES) MAX.

OPTION NUMBER 500 NOT MARKED.

NOTE: FLOATING LEAD PROTRUSION IS 0.15 mm (6 mils) MAX.

chanhvinh.com

Solder Reflow Temperature Profile

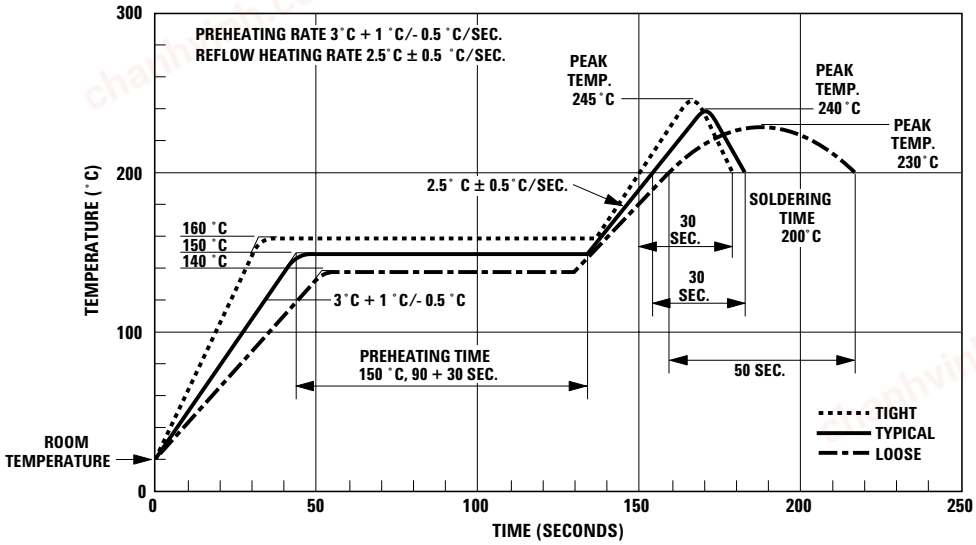

Note: Non-halide flux should be used

Recommended Pb-Free IR Profile

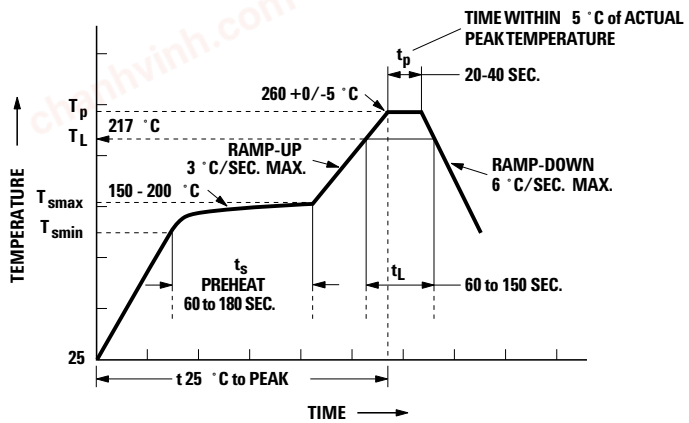

NO TES:
THE TIME FROM 25 ˚C to PEAK TEMPERATURE = 8 MINUTES MAX.
T_{smax} = 200 ˚C, T_{smin} = 150 ˚C

Note: Non-halide flux should be used

Regulatory Information

Both ACPL-072L and ACPL-772L are approved by the following organizations:

IEC/EN/DIN EN 60747-5-2
Approved under:
IEC 60747-5-2:1997 + A1:2002
EN 60747-5-2:2001 + A1:2002
DIN EN 60747-5-2 (VDE 0884 Teil 2):2003-01.
(option 060 only)

UL
Approved under UL 1577, component recognition program up, File E55361.

CSA
Approved under CSA Component Acceptance Notice #5, File CA 88324.

chanhvinh.com

Table 1. IEC/EN/DIN EN 60747-5-2 Insulation Characteristics*

Description	Symbol	ACPL-772L Option 060	ACPL-072L Option 060	Units
Installation classification per DIN VDE 0110/1.89, Table 1				
for rated mains voltage ≤ 150 Vrms		I – IV	I – IV	
for rated mains voltage ≤ 300 Vrms		I – IV	I – III	
for rated mains voltage ≤ 450 Vrms		I – III		
Climatic Classification		55/105/21	55/105/21	
Pollution Degree (DIN VDE 0110/1.89)		2	2	
Maximum Working Insulation Voltage	V_{IORM}	630	560	V_{peak}
Input to Output Test Voltage, Method b** V_{IORM} x 1.875=V_{PR}, 100% Production Test with t_m=1 sec, Partial discharge < 5 pC	V_{PR}	1181	1050	V_{peak}
Input to Output Test Voltage, Method a** V_{IORM} x 1.5=V_{PR}, Type and Sample Test, t_m=60 sec, Partial discharge < 5 pC	V_{PR}	945	840	V_{peak}
Highest Allowable Overvoltage (Transient Overvoltage t_{ini} = 10 sec)	V_{IOTM}	6000	4000	V_{peak}
Safety-limiting values – maximum values allowed in the event of a failure, also see Figure 2.				
Case Temperature	T_S	175	150	°C
Input Current	$I_{S, INPUT}$	230	150	mA
Output Power	$P_{S, OUTPUT}$	600	600	mW
Insulation Resistance at T_S, V_{IO} = 500 V	R_{IO}	>109	>109	Ω

* Isolation characteristics are guaranteed only within the safety maximum ratings which must be ensured by protective circuits in application. Surface mount classification is class A in accordance with CECCOO802.

** Refer to the optocoupler section of the Isolation and Control Components Designer's Catalog, under Product Safety Regulations section IEC/EN/DIN EN 60747-5-2, for a detailed description of Method a and Method b partial discharge test profiles.

Note: These optocouplers are suitable for "safe electrical isolation" only within the safety limit data. Maintenance of the safety data shall be ensured by means of protective circuits.

Note: The surface mount classification is Class A in accordance with CECC 00802.

Table 2. Insulation and Safety Related Specifications

		Value			
Parameter	Symbol	ACPL-772L	ACPL-072L	Units	Conditions
Minimum External Air Gap (Clearance)	L(101)	7.1	4.9	mm	Measured from input terminals to output terminals, shortest distance through air.
Minimum External Tracking (Creepage)	L(102)	7.4	4.8	mm	Measured from input terminals to output terminals, shortest distance path along body.
Minimum Internal Plastic Gap (Internal Clearance)		0.08	0.08	mm	Through insulation distance conductor to conductor, usually the straight line distance thickness between the emitter and detector.
Tracking Resistance (Comparative Tracking Index)	CTI	>175	>175	V	DIN IEC 112/VDE 0303 Part 1
Isolation Group		IIIa	IIIa		Material Group (DIN VDE 0110, 1/89, Table 1)

All Avago Technologies data sheets report the creepage and clearance inherent to the optocoupler component itself. These dimensions are needed as a starting point for the equipment designer when determining the circuit insulation requirements. However, once mounted on a printed circuit board, minimum creepage and clearance requirements must be met as specified for individual equipment standards. For creepage, the shortest distance path along the surface of a printed circuit board between the solder fillets of the input and output leads must be considered.

There are recommended techniques such as grooves and ribs which may be used on a printed circuit board to achieve desired creepage and clearances. Creepage and clearance distances will also change depending on factors such as pollution degree and insulation level.

chanhvinh.com

Table 3. Absolute Maximum Ratings

Parameter	Symbol	Min.	Max.	Units
Storage Temperature	T_S	–55	+125	°C
Ambient Operating Temperature[1]	T_A	–40	+105	°C
Supply Voltages	V_{DD1}, V_{DD2}	0	6.0	Volts
Input Voltage	V_I	–0.5	V_{DD1} +0.5	Volts
Output Voltage	V_O	–0.5	V_{DD2} +0.5	Volts
Average Output Current	I_O		10	mA
Lead Solder Temperature	260°C for 10 sec., 1.6 mm below seating plane			
Solder Reflow Temperature Profile	Please See Solder Reflow Temperature Profile Section			

Table 4. Recommended Operating Conditions

Parameter	Symbol	Min.	Max.	Units
Ambient Operating Temperature	T_A	–40	+105	°C
Supply Voltages (3.3V operation)	V_{DD1}, V_{DD2}	3.0	3.6	V
Supply Voltages (5V operation)	V_{DD1}, V_{DD2}	4.5	5.5	V
Logic High Input Voltage	V_{IH}	2.0	V_{DD1}	V
Logic Low Input Voltage	V_{IL}	0.0	0.8	V
Input Signal Rise and Fall Times	t_r, t_f		1.0	ms

Table 5. Electrical Specifications

Test conditions that are not specified can be anywhere within the recommended operating range.

The following specifications cover the following power supply combinations: ($4.5V \le V_{DD1} \le 5.5V$, $4.5V \le V_{DD2} \le 5.5V$), ($3V \le V_{DD1} \le 3.6V$, $3V \le V_{DD2} \le 3.6V$), ($4.5V \le V_{DD1} \le 5.5V$, $3V \le V_{DD2} \le 3.6V$) and ($3V \le V_{DD1} \le 3.6V$, $4.5V \le V_{DD2} \le 5.5V$).

All typical specifications are at T_A=+25°C , $V_{DD1} = V_{DD2} = +3.3V$.

Parameter	Symbol	Min.	Typ.	Max.	Units	Test Conditions
Logic Low Input Supply Current[2]	I_{DD1L}		8.8	15	mA	$V_I = 0$ V
Logic High Input Supply Current[2]	I_{DD1H}		1.4	5	mA	$V_I = V_{DD1}$
Output Supply Current	I_{DD2L}		4.3	10	mA	
	I_{DD2H}		4.5	10	mA	
Input Current	I_I	–10		10	µA	
Logic High Output Voltage	V_{OH}	V_{DD2} -0.4	V_{DD2}		V	$I_O = –20$ µA, $V_I = V_{IH}$
		V_{DD2} -1.4	V_{DD2} -0.4		V	$I_O = –4$ mA, $V_I = V_{IH}$
Logic Low Output Voltage	V_{OL}		0	0.1	V	$I_O = 20$ µA, $V_I = V_{IL}$
			0.35	1.0	V	$I_O = 4$ mA, $V_I = V_{IL}$

chanhvinh.com

Table 6. Switching Specifications

Test conditions that are not specified can be anywhere within the recommended operating range.

The following specifications cover the following power supply combinations: (4.5V≤V_{DD1}≤5.5V, 4.5V≤V_{DD2}≤5.5V), (3V≤V_{DD1}≤3.6V, 3V≤V_{DD2}≤3.6V), (4.5V≤V_{DD1}≤5.5V, 3V≤V_{DD2}≤3.6V) and (3V≤V_{DD1}≤3.6V, 4.5V≤V_{DD2}≤5.5V).

All typical specifications are at T_A=+25°C, V_{DD1} = V_{DD2} = +3.3V.

Parameter	Symbol	Min.	Typ.	Max.	Units	Test Conditions
Propogation Delay Time to Logic Low Output [3]	t_{PHL}		23.5	40	ns	C_L = 15 pF, CMOS Signal Levels
Propogation Delay Time to Logic High Output [3]	t_{PLH}		25.5	40	ns	C_L = 15 pF, CMOS Signal Levels
Pulse Width [4]	t_{PW}	40			ns	C_L = 15 pF, CMOS Signal Levels
Maximum Data Rate [5]				25	MBd	C_L = 15 pF, CMOS Signal Levels
Pulse Width Distortion [6] $\lvert t_{PHL} - t_{PLH} \rvert$	|PWD |		2	6	ns	C_L = 15 pF, CMOS Signal Levels
Propagation Delay Skew [7]	t_{PSK}			20	ns	C_L = 15 pF, CMOS Signal Levels
Output Rise Time (10% – 90%)	t_R		9		ns	C_L = 15 pF, CMOS Signal Levels
Output Fall Time (90% - 10%)	t_F		8		ns	C_L = 15 pF, CMOS Signal Levels
Common Mode Transient Immunity at Logic High Output [8]	$\lvert CM_H \rvert$	10	20		kV/µs	V_{CM} = 1000 V, T_A = 25°C, V_I = V_{DD1}, V_O > 0.8 V_{DD1}
Common Mode Transient Immunity at Logic Low Output [8]	$\lvert CM_L \rvert$	10	20		kV/µs	V_{CM} = 1000 V, T_A = 25°C, V_I = 0 V, V_O < 0.8 V

Table 7. Package Characteristics

All typical specifications are at T_A = 25°C.

Parameters		Symbol	Min.	Typ.	Max.	Units	Test Conditions
Input-Output Momentary With-stand Voltage [7,8,9]	072L	V_{ISO}	3750			V rms	RH ≤ 50%, t = 1 min, T_A = 25°C
	772L		3750				
	772L with 020 option		5000				
Input-Output Resistance [9]		R_{I-O}		10^{12}		Ω	V_{I-O} = 500 V dc
Input-Output Capacitance		C_{I-O}		0.6		pF	f = 1 MHz
Input Capacitance [12]		C_I		3.0		pF	
Input IC Junction-to-Case Thermal Resistance	772L	θjci		145		°C/W	Thermocouple located at center underside of package
	072L			160			
Output IC Junction-to-Case Thermal Resistance	772L	θjco		140		°C/W	
	072L			135			
Package Power Dissipation	P_{PD}				150	mW	

Notes:
1. Absolute Maximum ambient operating temperature means the device will not be damaged if operated under these conditions. It does not guarantee functionality.
2. The LED is ON when V_I is low and OFF when V_I is high.
3. t_{PHL} propagation delay is measured from the 50% level on the falling edge of the V_I signal to the 50% level of the falling edge of the V_O signal. t_{PLH} propagation delay is measured from the 50% level on the rising edge of the V_I signal to the 50% level of the rising edge of the V_O signal.
4. The minimum pulse width is the shortest pulse width at which the specified pulse width distortion is guaranteed.
5. The maximum data rate is the fastest data rate at which the specified pulse width distortion is guaranteed.
6. PWD is defined as $\lvert t_{PHL} - t_{PLH} \rvert$. %PWD (percent pulse width distortion) is equal to the PWD divided by pulse width.
7. t_{PSK} is equal to the magnitude of the worst case difference in t_{PHL} and/or t_{PLH} that will be seen between units at any given temperature within the recommended operating conditions.

chanhvinh.com

8. CM_H is the maximum common mode voltage slew rate that can be sustained while maintaining $V_O > 0.8\ V_{DD2}$. CML is the maximum common mode voltage slew rate that can be sustained while maintaining $V_O < 0.8$ V. The common mode voltage slew rates apply to both rising and falling common mode voltage edges.
9. Device considered a two-terminal device: pins 1, 2, 3, and 4 shorted together and pins 5, 6, 7, and 8 shorted together.
10. In accordance with UL1577, each ACPL-072L is proof tested by applying an insulation test voltage ≥ 4500 V_{RMS} for 1 second (leakage detection current limit, $I_{I-O} \leq 5\ \mu A$). Each ACPL-772L is proof tested by applying an insulation test voltage ≥ 4500 V_{RMS} for 1 second (leakage detection current limit, $I_{I-O} \leq 5\ \mu A$).
11. The Input-Output Momentary Withstand Voltage is a dielectric voltage rating that should not be interpreted as an input-output continuous voltage rating. For the continuous voltage rating refers to your equipment level safety specification or Avago Technologies Application Note 1074 entitled "Optocoupler Input-Output Endurance Voltage."
12. C_I is the capacitance measured at pin 2 (V_I).

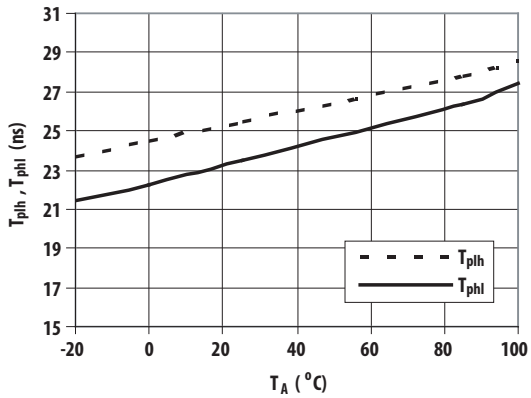

Figure 1. Typical propagation delays vs temperature

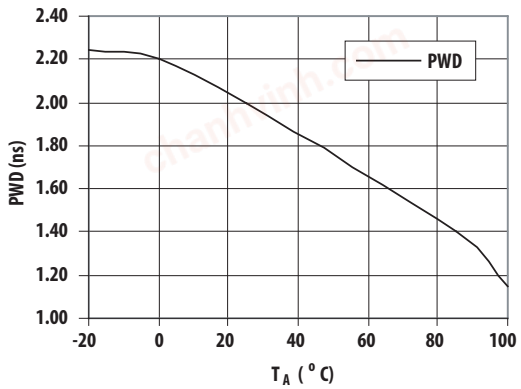

Figure 2. Typical pulse width distortion vs temperature

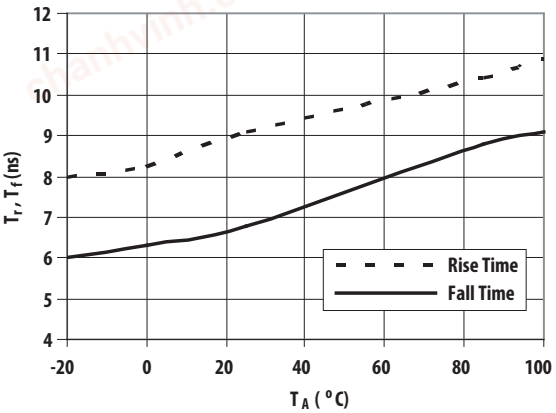

Figure 3. Typical rise and fall time vs temperature

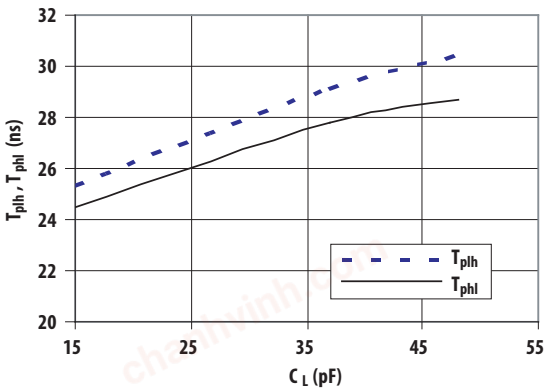

Figure 4. Typical propagation delays vs load capacitance

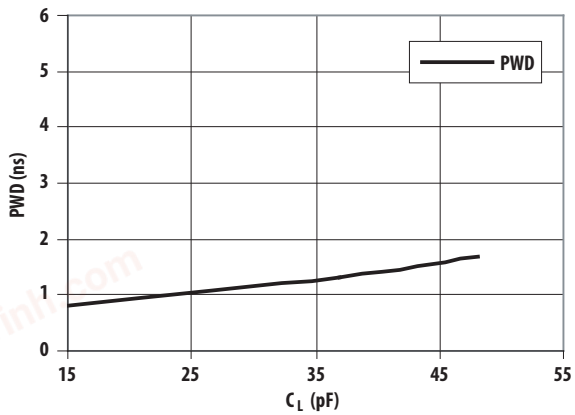

Figure 5. Typical pulse width distortion vs load capacitance

Surface Mount SO-8 Product

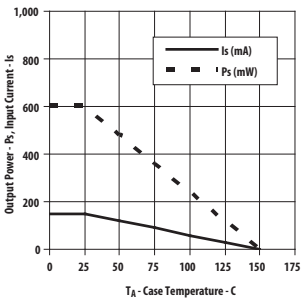

Standard 8-pin DIP Product

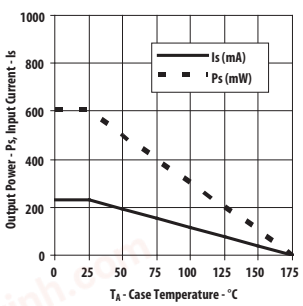

Figure 6. Thermal derating curve, dependence of safety limiting value with case temperature per IEC/EN/DIN EN 60747-5-2

chanhvinh.com

Application Information

Bypassing and PC Board Layout

The ACPL-x72L optocouplers are extremely easy to use. No external interface circuitry is required because ACPL-x72L uses high speed CMOS IC technology allowing CMOS logic to be connected directly to the inputs and outputs.

As shown in Figure 7, the only external components required for proper operation are two bypass capacitors. Capacitor values should be between 0.01µF and 0.1µF. For each capacitor, the total lead length between both ends of the capacitor and power supply pins should not exceed 20mm. Figure 8 illustrates the recommended printed circuit board layout for ACPL-x72L.

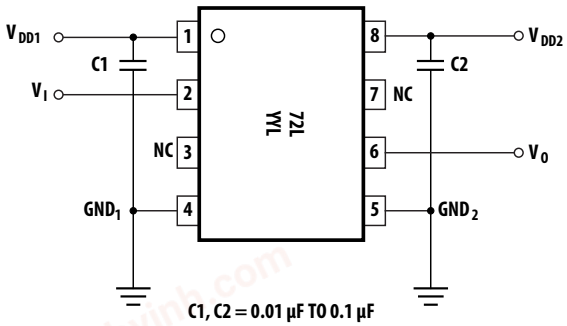

Figure 7. Recommended Circuit Diagram

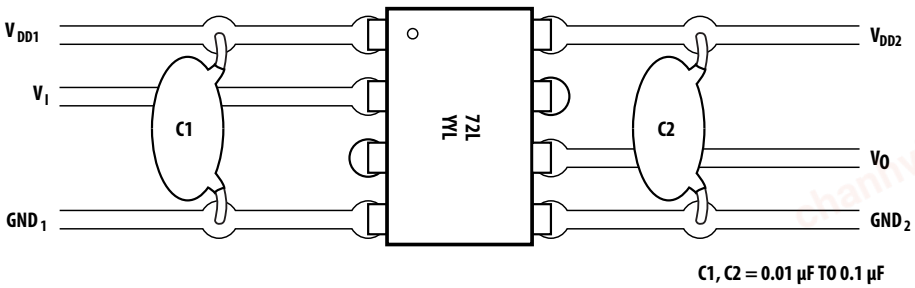

Figure 8. Recommended Printed Circuit Board Layout

Propagation Delay, Pulse-Width Distortion and Propagation Delay Skew

Propagation Delay is a figure of merit which describes how quickly a logic signal propagates through a system. The propagation delay from a low to high (t_{PLH}) is the amount of time required for an input signal to propagate to the output, causing the output to change from low to high. Similarly, the propagation delay from high to low (t_{PHL}) is the amount of time required for the input signal to propagate to the output, causing the output to change from high to low. Please see Figure 9.

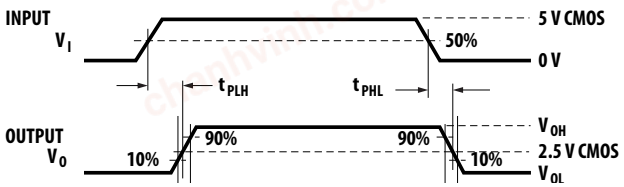

Figure 9. Signal plot shows how propagation delay is defined

Pulse-width distortion (PWD) is the difference between t_{PHL} and t_{PLH} and often determines the maximum data rate capability of a transmission system. PWD can be expressed in percent by dividing the PWD (in ns) by the minimum pulse width (in ns) being transmitted. Typically, PWD on the order of 20-30% of the minimum pulse width is tolerable. The PWD specification for ACPL-x72L is 6ns (15%) maximum across recommended operating conditions.

chanhvinh.com

Propagation delay skew, t_{PSK}, is an important parameter to consider in parallel data applications where synchronization of signals on parallel data lines is a concern. If the parallel data is sent through a group of optocouplers, differences in propagation delays will cause the data to arrive at the outputs of the optocouplers at different times. If this difference in propagation delay is large enough it will determine the maximum rate at which parallel data can be sent through the optocouplers.

Propagation delay skew is defined as the difference between the minimum and maximum propagation delays, either t_{PLH} or t_{PHL} for any given group of optocouoplers which are operating under the same conditions (i.e., the same drive current, supply voltage, output load, and operating temperature). As illustrated in Figure 10, if the inputs of a group of optocouplers are switched either ON or OFF at the same time, t_{PSK} is the difference between the shortest propagation delay, either t_{PLH} or t_{PHL} and the longest propagation delay, either t_{PLH} and t_{PHL}.

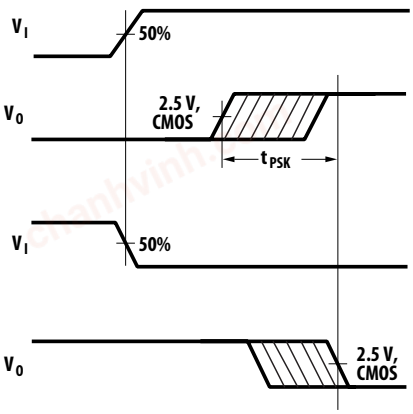

Figure 10. Propagation delay skew waveform

As mentioned earlier, t_{PSK} can determine the maximum parallel data transmission rate. Figure 11 is the timing diagram of a typical parallel data application with both the clock and data lines being sent through the optocouplers. The figure shows data and clock signals at the inputs and outputs of the optocouplers. In this case the data is assumes to be clocked off of the rising edge of the clock.

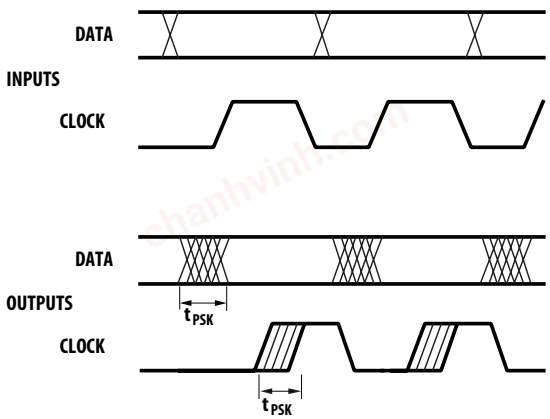

Figure 11. Parallel data transmission example.

Propagation delay skew represents the uncertainty of where an edge might be after being sent through an optocoupler. Figure 11 shows that there will be uncertainty in both the data and clock lines. It is important that these two areas of uncertainty not overlap, otherwise the clock signal might arrive before all the data outputs have settled, or some of the data outputs may start to change before the clock signal has arrived. From these considerations, the absolute minimum pulse width that can be sent through optocouplers in a parallel application is twice t_{PSK}. A cautious design should use a slightly longer pulse width to ensure that any additional uncertainty in the rest of the circuit does not cause a problem.

The ACPL-x72L optocoupler offers the advantage of guaranteed specifications for propagation delays, pulse-width distortion, and propagation delay skew over the recommended temperature and power supply ranges.

Avago, Avago Technologies, and the A logo are trademarks of Avago Technologies in the United States and other countries.
Data subject to change. Copyright © 2005-2010 Avago Technologies. All rights reserved. Obsoletes AV01-0462EN
AV02-0324EN - January 19, 2010