chanhvinh.com

BROADCOM®

Data Sheet

ACNU-3410

3-Amp Gate Drive Optocoupler in 11-mm SSO8 Package with 100-kV/µs Noise Immunity

Description

The Broadcom® ACNU-3410 is a 3A gate drive optocoupler device in the 11-mm SSO8 package designed for high voltage, space-constrained industrial applications, including motor drives and solar inverters. This package platform features wide 11-mm creepage and 10.5-mm clearance, high insulation voltage of V_{IORM} = 1414 V_{PEAK} and a compact package footprint, 40 percent smaller than the 400-mil DIP-8 package.

The ACNU-3410 has common mode transient immunity (CMTI) greater than 100 kV/is and a propagation delay faster than 150 ns, enabling high frequency switching to improve efficiency in driving IGBT and SiC/GaN MOSFET.

CAUTION! Take normal static precautions in handling and assembly of this component to prevent damage, degradation, or both that might be induced by ESD. The components featured in this data sheet are not to be used in military or aerospace applications or environments.

Features

- 3.0A maximum peak output current
- 11-mm creepage and 10.5-mm clearance
- Rail-to-rail output voltage
- UVLO with V_E reference for negative power supply
- 150-ns maximum propagation delay
- 90-ns maximum propagation delay difference
- LED current input with hysteresis
- 100 kV/µs minimum Common Mode Rejection (CMR) at V_{CM} = 1500V
- I_{DD} = 5.0 mA maximum supply current
- Under Voltage Lock-Out Protection (UVLO) with Hysteresis
- Wide operating V_{DD} range: 15V to 30V
- Industrial temperature range: –40°C to 110°C
- Safety approvals:
  - UL Recognized 5000 V_{RMS} for 1minute.
  - CSA
  - IEC/EN/DIN EN 60747-5-5 V_{IORM} = 1414 V_{peak}

Applications

- IGBT/MOSFET gate drives
- AC and brushless DC motor drives
- Renewable energy inverters
- Industrial inverters
- Switching power supplies

chanhvinh.com

Figure 1: Functional Diagram

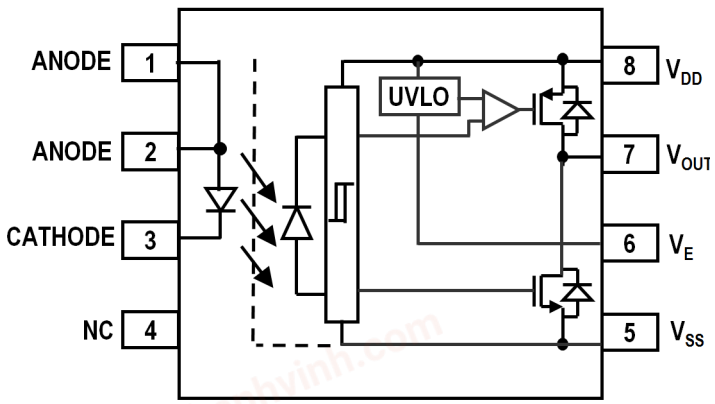

Design Notes: A 1-µF bypass capacitor must be connected between pins V_{DD} and V_{SS}.

Table 1: Truth Table – ACNU-3410

LED	$V_{DD} - V_E$ POSITIVE GOING (that is, TURN-ON)	$V_{DD} - V_E$ NEGATIVE GOING (that is, TURN-OFF)	VO
OFF	0V to 30V	0V to 30V	LOW
ON	0V to 11.9V	0V to 10.9V	LOW
ON	11.9V to 13.2V	10.9V to 12.2V	TRANSITION
ON	13.2V to 30V	12.2V to 30V	HIGH

Ordering Information

ACNU-3410 is UL Recognized with 5000 V_{RMS} for 1 minute per UL1577.

Table 2: Ordering Information

Part Number	Option	Package	Tape and Reel	IEC/EN/DIN EN 60747-5-5	Quantity
	RoHS Compliant				
ACNU-3410	-000E	11-mm SSO8		X	80 per tube
	-500E		X	X	1000 per reel

To order, choose a part number from the part number column and combine with the desired option from the option column to form an order entry.

Example:

ACNU-3410-500E to order the product in tape and reel packaging with IEC/EN/DIN EN 60747-5-5 safety approval in RoHS compliant.

Option data sheets are available. Contact your Broadcom sales representative or authorized distributor for information.

chanhvinh.com

Package Outline Drawings

Figure 2: ACNU-3410 Outline Drawing (11-mm SSO8 Package)

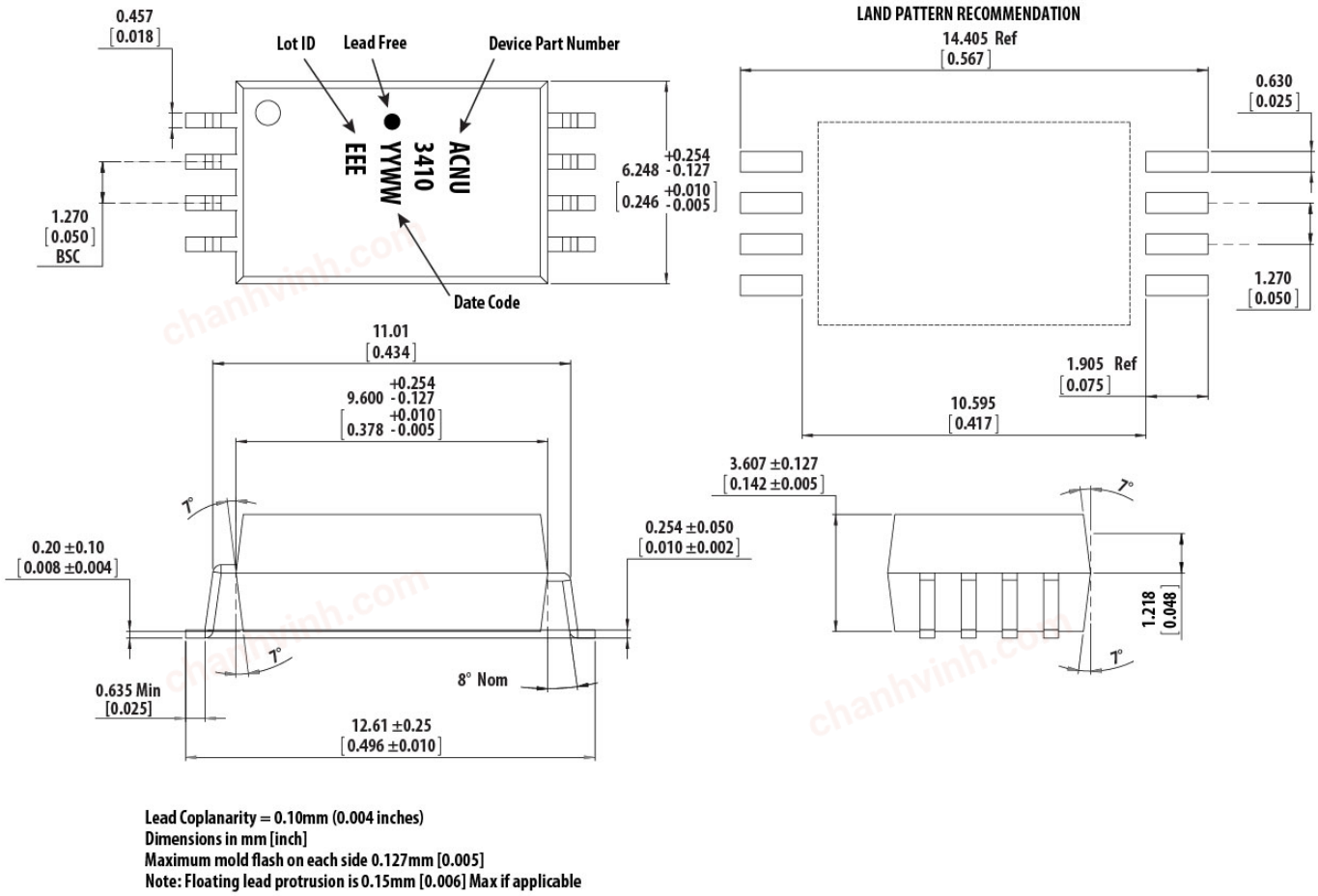

Lead Coplanarity = 0.10mm (0.004 inches)
Dimensions in mm [inch]
Maximum mold flash on each side 0.127mm [0.005]
Note: Floating lead protrusion is 0.15mm [0.006] Max if applicable

Recommended Pb-Free IR Profile

Recommended reflow condition as per JEDEC Standard, J-STD-020 (latest revision). Non-halide flux should be used.

Regulatory Information

The ACNU-3410 is approved by the following organizations.

UL	Recognized under UL 1577, component recognition program up to V_{ISO} = 5000 V_{RMS}, File E55361
CSA	CSA Component Acceptance Notice #5, File CA 88324
IEC/EN/DIN EN 60747-5-5	Maximum Working Insulation Voltage V_{IORM} = 1414 V_{peak}

chanhvinh.com

Insulation Characteristics

Table 3: IEC/EN/DIN EN 60747-5-5 Insulation Characteristics

Description	Symbol	Characteristic	Units
Installation Classification per DIN VDE 0110/39, Table 1			
For Rated Mains Voltage ≤ 600V_{RMS}		I – IV	
For Rated Mains Voltage ≤ 1000V_{RMS}		I – III	
Climatic Classification		40/110/21	
Pollution Degree (DIN VDE 0110/39)		2	
Maximum Working Insulation Voltage	V_{IORM}	1414	V_{peak}
Input to Output Test Voltage, Method b[a] V_{IORM} x 1.875 = V_{PR}, 100% Production Test with t_m=1 sec, Partial Discharge < 5 pC	V_{PR}	2652	V_{peak}
Input to Output Test Voltage, Method a[a] V_{IORM} × 1.6 = V_{PR}, Type and Sample Test, t_m = 10 sec, Partial Discharge < 5 pC	V_{PR}	2262	V_{peak}
Highest Allowable Overvoltage[a] (Transient Overvoltage tini = 60 sec)	V_{IOTM}	8000	V_{peak}
Safety-Limiting Values – maximum values allowed in the event of a failure[b]			
Case Temperature	T_S	175	°C
Input Current	$I_{S, INPUT}$	230	mA
Output Power	$P_{S, OUTPUT}$	600	mW
Insulation Resistance at T_S, V_{IO} = 500V	R_S	$>10^9$	Ω

a. Refer to IEC/EN/DIN EN 60747-5-5 Optoisolator Safety Standard section of the *Broadcom Regulatory Guide to Isolation Circuits*, AV02-2041EN, for a detailed description of Method a and Method b partial discharge test profiles.

b. These optocouplers are suitable for *safe electrical isolation* only within the safety limit data. Maintenance of the safety data shall be ensured by means of protective circuits. Surface mount classification is Class A in accordance with CECC 00802.

chanhvinh.com

Insulation and Safety-Related Specifications

Table 4: Insulation and Safety Related Specifications

Parameter	Symbol	ACNU-3410	Units	Conditions
Minimum External Air Gap (Clearance)	L(101)	10.5	mm	Measured from input terminals to output terminals, shortest distance through air.
Minimum External Tracking (Creepage)	L(102)	11.0	mm	Measured from input terminals to output terminals, shortest distance path along body.
Minimum Internal Plastic Gap (Internal Clearance)		0.5	mm	Through insulation distance conductor to conductor, usually the straight line distance thickness between the emitter and detector.
Tracking Resistance (Comparative Tracking Index)	CTI	>300	V	DIN IEC 112/VDE 0303 Part 1.
Isolation Group		IIIa		Material Group (DIN VDE 0110, 1/89, Table 1).

NOTE: All Broadcom data sheets report the creepage and clearance inherent to the optocoupler component itself. These dimensions are needed as a starting point for the equipment designer when determining the circuit insulation requirements. However, once mounted on a printed circuit board, minimum creepage and clearance requirements must be met as specified for individual equipment standards. For creepage, the shortest distance path along the surface of a printed circuit board between the solder fillets of the input and output leads must be considered (the recommended Land Pattern does not necessarily meet the minimum creepage of the device). There are recommended techniques, such as grooves and ribs, that may be used on a printed circuit board to achieve desired creepage and clearances. Creepage and clearance distances will also change depending on factors, such as pollution degree and insulation level.

chanhvinh.com

Absolute Maximum Ratings

Table 5: Absolute Maximum Ratings

Parameter	Symbol	Min.	Max.	Units	Note
Storage Temperature	T_S	–55	125	°C	
Operating Temperature	T_A	–40	110	°C	
Average Input Current	$I_{F(AVG)}$	—	25	mA	a
Peak Transient Input Current (<1 ms pulse width, 300 pps)	$I_{F(TRAN)}$	—	1	A	
Reverse Input Voltage	V_R	—	5	V	
High Peak Output Current	$I_{OH(PEAK)}$	—	3.0	A	b
Low Peak Output Current	$I_{OL(PEAK)}$	—	3.0	A	b
Total Output Supply Voltage	$(V_{DD} – V_{SS})$	–0.5	35	V	
Negative Output Supply Voltage	$(V_E – V_{SS})$	–0.5	15	V	
Positive Output Supply Voltage	$(V_{DD} – V_E)$	–0.5	$35 – (V_E – V_{SS})$	V	
Output Voltage	$V_{O(PEAK)}$	–0.5	V_{DD}	V	
Output IC Power Dissipation	P_O	—	500	mW	c
Total Power Dissipation	P_T	—	550	mW	d

a. Derate linearly above 70°C free-air temperature at a rate of 0.3 mA/°C.

b. Maximum pulse width = 10 µs. This value is intended to allow for component tolerances for designs with I_O peak minimum = 2.5A. See Application Information for additional details on limiting I_{OH} peak.

c. Derate linearly above 85°C free-air temperature at a rate of12.5 mW/°C.

d. Derate linearly above 85°C free-air temperature at a rate of 13.75 mW/°C. The maximum LED junction temperature should not exceed 125°C.

Recommended Operating Conditions

Table 6: Recommended Operating Conditions

Parameter	Symbol	Min	Max.	Units	Note
Operating Temperature	T_A	–40	110	°C	
Output Supply Voltage	$(V_{DD} – V_{SS})$	15	30	V	
Negative Output Supply Voltage	$(V_E – V_{SS})$	0	15	V	
Positive Output Supply Voltage	$(V_{DD} – V_E)$	15	$30 – (V_E – V_{SS})$	V	
Input Current (ON)	$I_{F(ON)}$	7	12	mA	
Input Voltage (OFF)	$V_{F(OFF)}$	–3.6	0.5	V	

chanhvinh.com

Electrical Specifications (DC)

All typical values are at T_A = 25°C, $V_{DD} – V_E$ = 15V, $V_E – V_{SS}$ = 15V. All minimum and maximum specifications are at recommended operating conditions (T_A = –40°C to 110°C, $I_{F(ON)}$ = 7 mA to 12 mA, $V_{F(OFF)}$ = –3.6V to 0.5V, $V_{DD} – V_E$ = 15V, $V_E – V_{SS}$ = 15V), unless otherwise noted.

Table 7: Electrical Specifications (DC)

Parameter	Symbol	Min.	Typ.	Max.	Unit	Test Conditions	Figure	Note
High Level Peak Output Current	I_{OH}	–2.5	—	—	A	$V_{DD} – V_O$ = 15		a
Low Level Peak Output Current	I_{OL}	2.5	—	—	A	$V_O – V_{SS}$ = 15		a
High Output Transistor RDS(ON)	$R_{DS,OH}$	0.5	1.5	3.0	Ω	I_{OH} = 4 A	5	b
Low Output Transistor RDS(ON)	$R_{DS,OL}$	0.2	0.9	1.8	Ω	I_{OL} = –4 A	6	b
High Level Output Voltage	V_{OH}	V_{DD} – 0.3	V_{DD} – 0.08	—	V	I_O = –100 mA	3	c, d
High Level Output Voltage	V_{OH}	—	V_{DD}	—	V	I_O = 0 mA, I_F = 10 mA		
Low Level Output Voltage	V_{OL}	—	0.05	0.25	V	I_O = 100 mA	4	
High Level Output Supply Current (V_{DD})	I_{DDH}	—	3	5	mA	I_F = 10 mA	7	
Low Level Output Supply Current (V_{DD})	I_{DDL}	—	3	5	mA	V_F = 0V	7	
V_E High Level Output Supply Current	I_{EH}	–1.3	–0.7	—	mA	I_F = 10 mA	8	
V_E Low Level Output Supply Current	I_{EL}	–1.0	–0.65	—	mA	V_F = 0V	8	
Threshold Input Current Low to High	I_{FLH}	0.50	2	6	mA	V_O > 5V	9	
Threshold Input Voltage High to Low	V_{FHL}	0.5	—	—	V			
Input Forward Voltage	V_F	1.20	1.45	1.85	V	I_F = 10 mA	13	
Temperature Coefficient of Input Forward Voltage	$\Delta V_F/\Delta T_A$	—	–1.5	—	mV/°C	I_F = 10 mA		
Input Reverse Breakdown Voltage	BV_R	5	—	—	V	I_R = 100 mA		
Input Capacitance	C_{IN}	—	23	—	pF	f = 1 MHz, V_F = 0V		
UVLO Threshold	V_{UVLO+}	11.9	12.6	13.2	V	V_O > 5V, I_F = 10 mA		
	$V_{UVLO–}$	10.9	11.6	12.2				
UVLO Hysteresis	$UVLO_{HYS}$	—	1.0	—	V			

a. Maximum pulse width = 10 ms.

b. Output is sourced at –2.5 A/2.5 A with a maximum pulse width = 10 µs.

c. In this test, V_{OH} is measured with a DC load current. When driving capacitive loads, V_{OH} will approach V_{DD} as I_{OH} approaches zero amps.

d. Maximum pulse width = 1 ms.

chanhvinh.com

Switching Specifications (AC)

All typical values are at T_A = 25°C, $V_{DD} – V_E$ = 15V, $V_E – V_{SS}$ = 15V. All minimum and maximum specifications are at recommended operating conditions (T_A = –40°C to 110°C, $I_{F(ON)}$ = 7 mA to 12 mA, $V_{F(OFF)}$ = –3.6V to 0.5V, $V_{DD} – V_E$ = 15V, $V_E – V_{SS}$ = 15V), unless otherwise noted.

Table 8: Switching Specifications (AC)

Parameter	Symbol	Min.	Typ.	Max.	Units	Test Conditions	Figure	Note
Propagation Delay Time to High Output Level	t_{PLH}	50	75	150	ns	R_G = 10Ω, C_G = 25 nF, f = 10 kHz, Duty Cycle = 50%, I_F = 10 mA,	10, 11, 14	
Propagation Delay Time to Low Output Level	t_{PHL}	50	70	150	ns			
Pulse Width Distortion	PWD	—	—	80	ns		14	a
Propagation Delay Difference Between Any Two Parts	PDD ($t_{PHL} – t_{PLH}$)	–90	—	90	ns		14	b
Propagation Delay Skew	t_{PSK}	—	—	80	ns		14	c
Rise Time	t_R	—	20	50	ns		12, 14	
Fall Time	t_F	—	10	30	ns			
Output High Level Common Mode Transient Immunity	$\|CM_H\|$	100	—	—	kV/µs	T_A = 25°C, I_F = 10 mA, V_{CM} = 1500V,	15	d, e
Output Low Level Common Mode Transient Immunity	$\|CM_L\|$	100	—	—	kV/µs	T_A = 25°C, V_F = 0V, V_{CM} = 1500V		d, f

a. Pulse Width Distortion (PWD) is defined as $|t_{PHL} – t_{PLH}|$ for any given device.

b. The difference between t_{PHL} and t_{PLH} between any two ACNU-3410 parts under the same test condition.

c. t_{PSK} is equal to the worst-case difference in t_{PHL} or t_{PLH} that will be seen between units at any given temperature and specified test conditions.

d. Split resistor network in the ratio 1:1.5 with 150Ω at the anode and 200Ω at the cathode.

e. Common mode transient immunity in the high state is the maximum tolerable dV_{CM}/dt of the common mode pulse, V_{CM}, to assure that the output remains in the high state (that is, V_O > 15.0V).

f. Common mode transient immunity in a low state is the maximum tolerable dV_{CM}/dt of the common mode pulse, V_{CM}, to assure that the output remains in a low state (that is, V_O < 1.0V).

chanhvinh.com

Package Characteristics

All typical values are at T_A = 25°C. All minimum/maximum specifications are at recommended operating conditions, unless otherwise noted.

Table 9: Package Characteristics

Parameter	Symbol	Min.	Typ.	Max.	Units	Test Conditions	Figure	Note
Input-Output Momentary Withstand Voltage	V_{ISO}	5000	—	—	V_{RMS}	RH < 50%, t = 1 min., T_A = 25°C		a, b
Input-Output Resistance	R_{I-O}	—	10^{12}	—	Ω	V_{I-O} = 500V_{DC}		b
Input-Output Capacitance	C_{I-O}	—	0.5	—	pF	f = 1 MHz		
LED-to-Ambient Thermal Resistance	R_{11}	—	103	—	°C/W	See Thermal Model for ACNU-3410 11-mm SSO8 Package Optocoupler.		c
LED-to-Detector Thermal Resistance	R_{12}	—	19	—				
Detector-to-LED Thermal Resistance	R_{21}	—	36	—				
Detector-to-Ambient Thermal Resistance	R_{22}	—	43	—				

a. In accordance with UL1577, each optocoupler is proof tested by applying an insulation test voltage ≥ 6000 V_{RMS} for 1 second (leakage detection current limit, I_{I-O} ≤ 5 µA).

b. The device is considered to be a two-terminal device: pins 1, 2, 3, and 4 shorted together and pins 5, 6, 7, and 8 shorted together.

c. The device was mounted on a high conductivity test board as per JEDEC 51-7.

chanhvinh.com

Figure 3: V_{OH} vs. Temperature

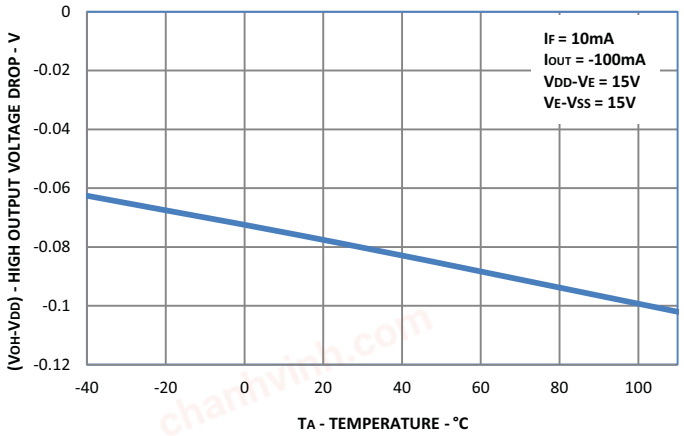

Figure 4: V_{OL} vs. Temperature

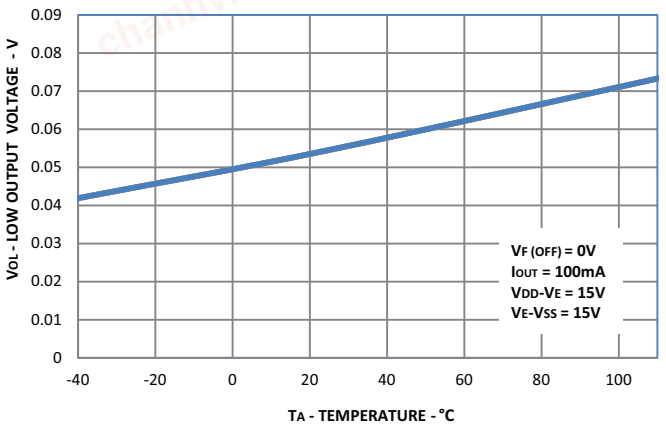

Figure 5: $R_{DS,OH}$ vs. Temperature

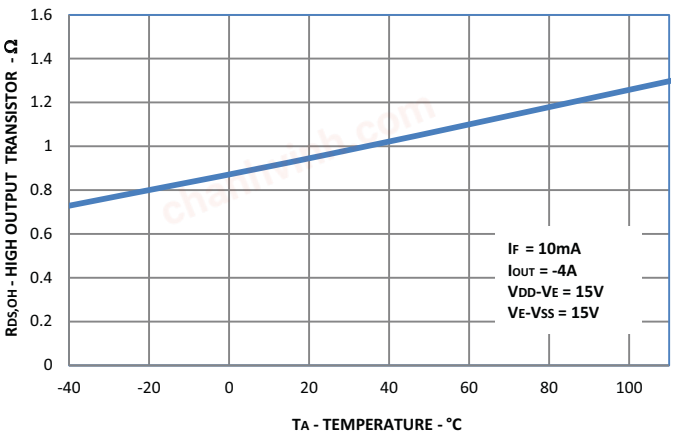

Figure 6: $R_{DS,OL}$ vs. Temperature

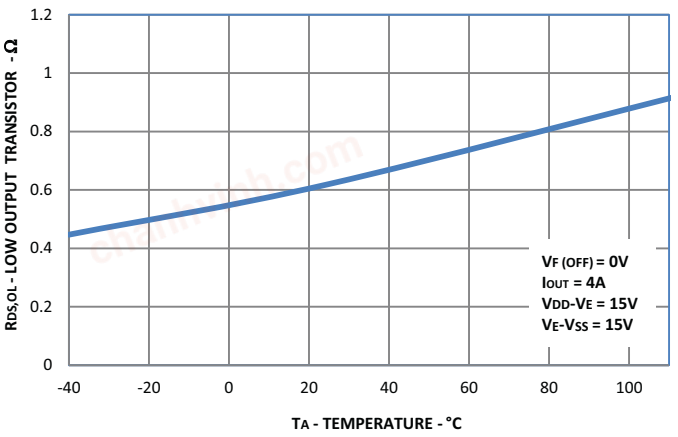

Figure 7: I_{DD} vs. Temperature

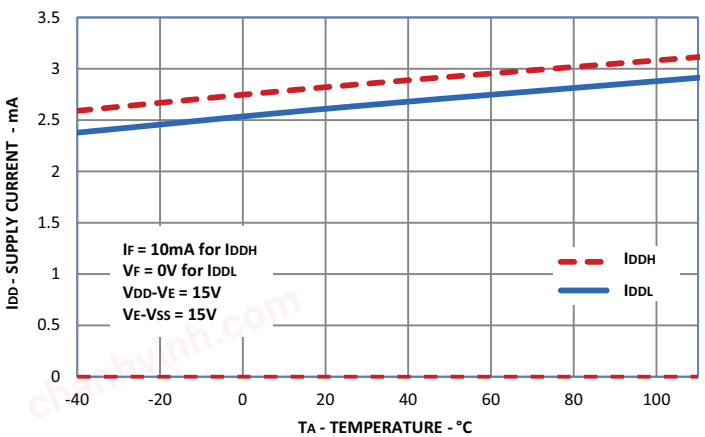

Figure 8: I_E vs. Temperature

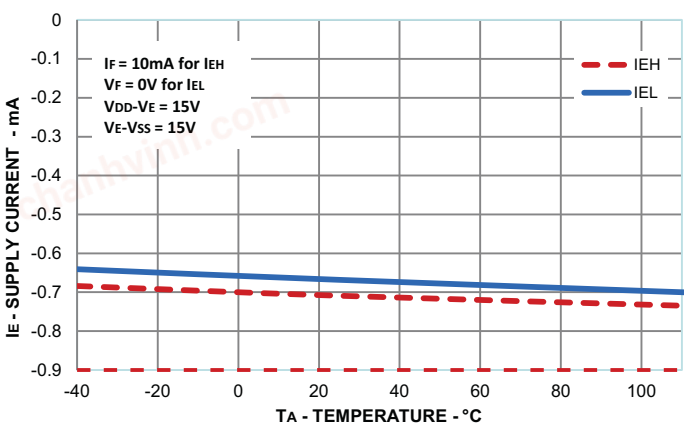

chanhvinh.com

Figure 9: I_{FLH} vs. Temperature

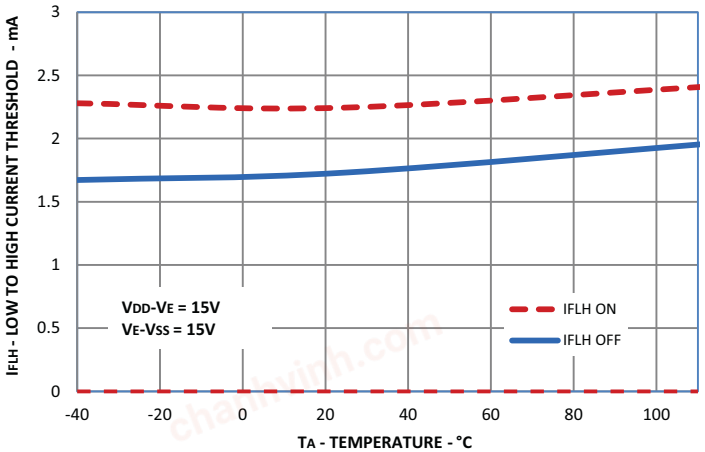

Figure 10: Propagation Delay vs. I_F

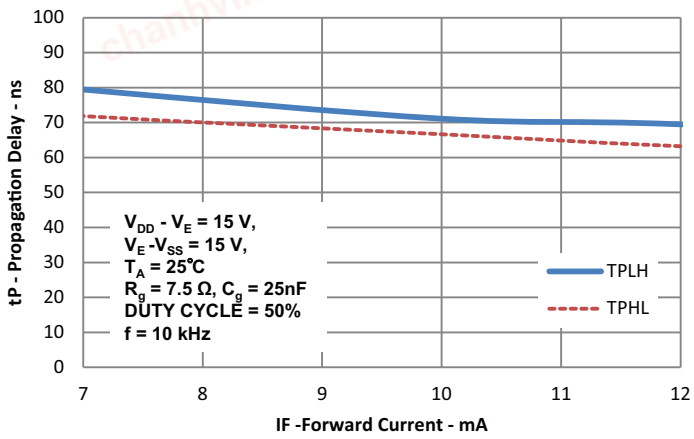

Figure 11: Propagation Delay vs. Temperature

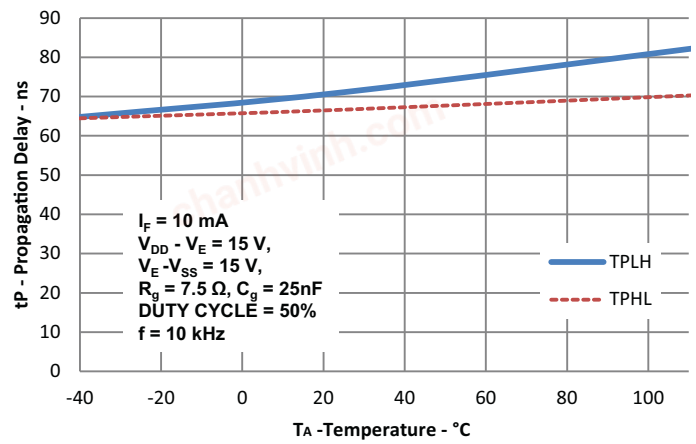

Figure 12: Rise and Fall Time vs. Temperature

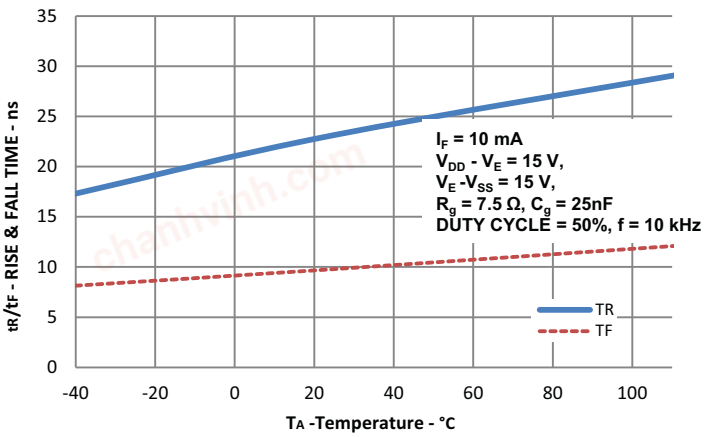

Figure 13: Input Current vs. Forward Voltage

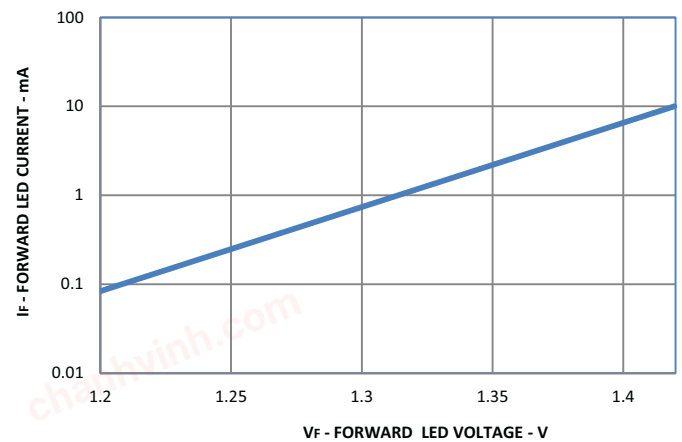

chanhvinh.com

Figure 14: t_{PLH}, t_{PHL}, PWD PDD, t_{PSK}, t_r, and t_f Test Circuit and Waveforms

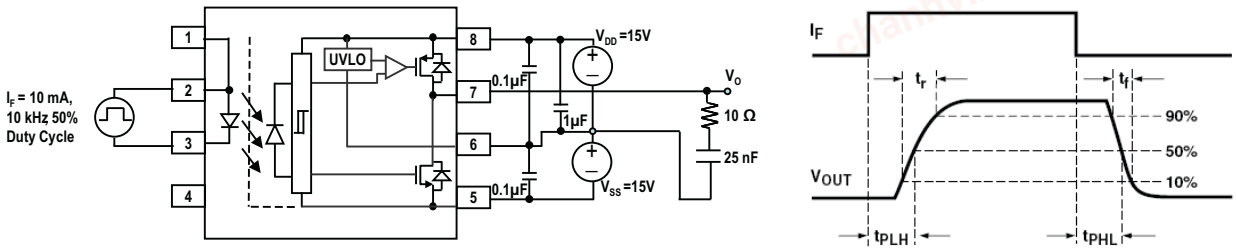

Figure 15: CMR Test Circuit with Split Resistors Network and Waveforms

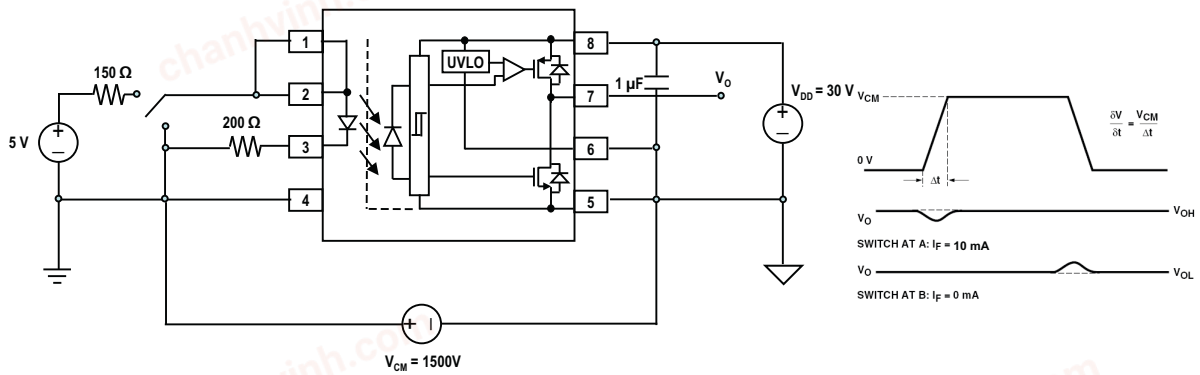

chanhvinh.com

Application Information

Product Overview Description

The ACNU-3410 is an optically isolated power output stage capable of driving IGBT or power MOSFET. Based on BCDMOS technology, this gate drive optocoupler delivers higher peak output current, better rail-to-rail output voltage performance and faster speed than the previous generation products.

The high peak output current and short propagation delay are needed for fast IGBT switching to reduce dead time and improve system overall efficiency. Rail-to-rail output voltage ensures that the MOSFET's gate voltage is driven to the optimum intended level with no power loss across the MOSFET. This helps the designer lower the system power, which is suitable for bootstrap power supply operation.

The ACNU-3410 has a V_E pin that allows of use negative power supply without affecting the UVLO monitoring the positive power supply. It has very high CMR (common mode rejection) rating which allows the microcontroller and the MOSFET to operate at very large common mode noise found in industrial motor drives and other power switching applications. The input is driven by direct LED current and has a hysteresis that prevents output oscillation if insufficient LED driving current is applied. This will eliminates the need of additional Schmitt trigger circuit at the input LED.

Recommended Application Circuit

The recommended application circuit shown in Figure 16 illustrates a typical gate drive implementation using the ACNU-3410.

The supply bypass capacitors provide the large transient currents necessary during a switching transition. Because of the transient nature of the charging currents, a low current (5.0 mA) power supply will be enough to power the device. The split resistors (in the ratio of 1:1.5) across the LED will provide a high CMR response by providing a balanced resistance network across the LED.

The gate resistor R_G serves to limit gate charge current and controls the IGBT switching times.

In PC board design, care should be taken to avoid routing the IGBT's collector or emitter traces close to the ACNU-3410 input as this can result in unwanted coupling of transient signals into ACNU-3410 and degrade performance.

Figure 16: Recommended Application Circuit with Split Resistors LED Drive

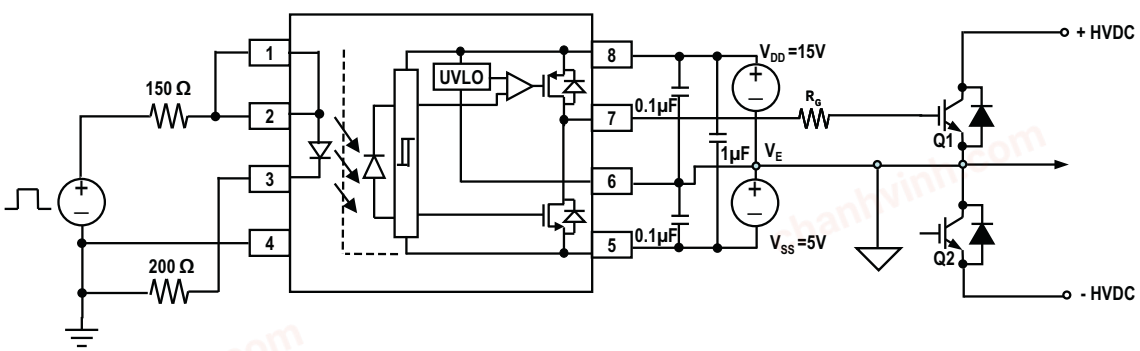

chanhvinh.com

Recommended Supply and Ground Planes Layout

At 3A rated high current switching, decoupling capacitor must be close to V_{DD} and V_{SS} pins.

And due to the fast switching, large V_{DD} and V_{SS} planes are recommended to prevent noise by lowering the parasitic inductance.

Figure 17: Recommended Supply and Ground Planes Layout

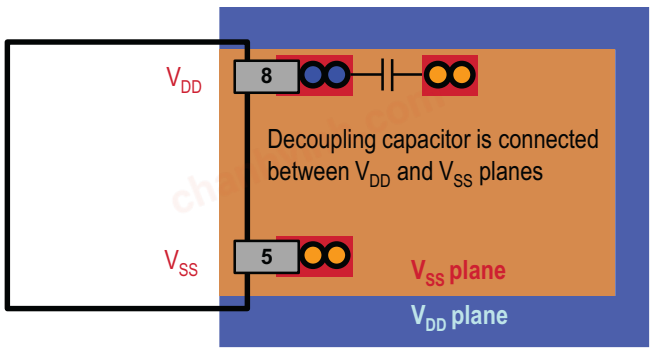

Thermal Model for ACNU-3410 11-mm SSO8 Package Optocoupler

Definitions:

- R_{11}: Junction to Ambient Thermal Resistance of LED due to heating of LED.
- R_{12}: Junction to Ambient Thermal Resistance of LED due to heating of Detector (Output IC).
- R_{21}: Junction to Ambient Thermal Resistance of Detector (Output IC) due to heating of LED.
- R_{22}: Junction to Ambient Thermal Resistance of Detector (Output IC) due to heating of Detector (Output IC).
- P_1: Power dissipation of LED (W).
- P_2: Power dissipation of Detector/Output IC (W).
- T_1: Junction temperature of LED (°C).
- T_2: Junction temperature of Detector (°C).
- T_A: Ambient temperature.

Ambient Temperature: Junction to Ambient Thermal Resistances were measured approximately 1.25 cm above optocoupler at ~23°C in still air.

Thermal Resistance	°C/W
R_{11}	103
R_{12}	19
R_{21}	36
R_{22}	43

This thermal model assumes that an 8-pin, single-channel plastic package optocoupler is soldered into a 7.62 cm x 7.62 cm printed circuit board (PCB) per JEDEC standards. The temperature at the LED and Detector junctions of the optocoupler can be calculated using the following equations:

chanhvinh.com

Equation 1:

$$T_1 = (R_{11} * P_1 + R_{12} * P_2) + T_A$$

Equation 2:

$$T_2 = (R_{21} * P_1 + R_{22} * P_2) + T_A$$

chanhvinh.com

Broadcom, the pulse logo, Connecting everything, Avago Technologies, Avago, and the A logo are among the trademarks of Broadcom and/or its affiliates in the United States, certain other countries, and/or the EU.

Copyright © 2016–2020 Broadcom. All Rights Reserved.

The term “Broadcom” refers to Broadcom Inc. and/or its subsidiaries. For more information, please visit www.broadcom.com.

Broadcom reserves the right to make changes without further notice to any products or data herein to improve reliability, function, or design. Information furnished by Broadcom is believed to be accurate and reliable. However, Broadcom does not assume any liability arising out of the application or use of this information, nor the application or use of any product or circuit described herein, neither does it convey any license under its patent rights nor the rights of others.

chanhvinh.com

BROADCOM®

Lead (Pb) Free
RoHS 6 fully compliant
RoHS 6 fully compliant options available;
-xxxE denotes a lead-free product