chanhvinh.com

6N134, 81028, HCPL-563x, HCPL-663x, HCPL-565x, 5962-98001, HCPL-268K, HCPL-665x, 5962-90855, HCPL-560x[1]

Hermetically Sealed, High Speed, High CMR, Logic Gate Optocouplers

Data Sheet

1. See matrix for available extensions.

Description

These units are single, dual and quad channel, hermetically sealed optocouplers. The products are capable of operation and storage over the full military temperature range and can be purchased as either commercial product or with full MIL-PRF-38534 Class Level H or K testing or from the appropriate DLA Drawing. All devices are manufactured and tested on a MIL-PRF-38534 certified line and Class H and K devices are included in the DLA Qualified Manufacturers List QML-38534 for Hybrid Microcircuits. Quad channel devices are available by special order in the 16-pin DIP through hole packages.

CAUTION It is advised that normal static precautions be taken in handling and assembly of this component to prevent damage and/or degradation which may be induced by ESD.

Features

- Dual marked with device part number and DLA Standard Microcircuit Drawing (SMD)
- Manufactured and tested on a MIL-PRF-38534 Certified Line
- QML-38534, Class H and K
- Five hermetically sealed package configurations
- Performance guaranteed over full military temperature range: –55°C to +125°C
- High speed: 10 Mbd typical
- CMR: > 10,000 V/µs typical
- 1500 Vdc withstand test voltage
- 2500 Vdc withstand test voltage for HCPL-565x
- High radiation immunity
- 6N137, HCPL-2601, HCPL-2630/31 function compatibility
- Reliability data
- TTL circuit compatibility

Applications

- Military and aerospace
- High reliability systems
- Transportation, medical, and life critical systems
- Line receiver
- Voltage level shifting
- Isolated input line receiver
- Isolated output line driver
- Logic ground isolation
- Harsh industrial environments
- Isolation for computer, communication, and test equipment systems

chanhvinh.com

Functional Diagram

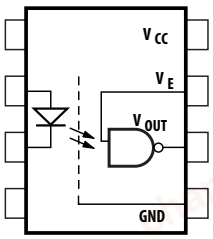

Multiple channel devices available.

Truth Table (Positive Logic)

Multichannel Devices

Input	Output
On (H)	L
Off (L)	H

Single Channel DIP

Input	Enable	Output
On (H)	H	L
Off (L)	H	H
On (H)	L	H
Off (L)	L	H

NOTE The connection of a 0.1 µF bypass capacitor between V_{CC} and GND is recommended.

Each channel contains a GaAsP light emitting diode that is optically coupled to an integrated high speed photon detector. The output of the detector is an open collector Schottky clamped transistor. Internal shields provide a guaranteed common mode transient immunity specification of 1000 V/µs. For Isolation Voltage applications requiring up to 2500 Vdc, the HCPL-5650 family is also available. Package styles for these parts are 8- and 16-pin DIP through hole (case outlines P and E, respectively), and 16-pin surface mount DIP flat pack (case outline F), leadless ceramic chip carrier (case outline 2). Devices may be purchased with a variety of lead bend and plating options. See the Selection Guide table for details. Standard Microcircuit Drawing (SMD) parts are available for each package and lead style.

Because the same electrical die (emitters and detectors) are used for each channel of each device listed in this data sheet, absolute maximum ratings, recommended operating conditions, electrical specifications, and performance characteristics shown in the figures are identical for all parts. Occasional exceptions exist due to package variations and limitations, and are as noted. Additionally, the same package assembly processes and materials are used in all devices. These similarities give justification for the use of data obtained from one part to represent other parts' performance for reliability and certain limited radiation test results.

chanhvinh.com

Selection Guide – Package Styles and Lead Configuration Options

Package	16-Pin DIP	8-Pin DIP	8-Pin DIP	8-Pin DIP	16-Pin Flat Pack	20-Pad LCCC
Lead Style	Through Hole	Through Hole	Through Hole	Through Hole	Unformed Leads	Surface Mount
Channels	2	1	2	2	4	2
Common Channel Wiring	V_{CC}, GND	None	V_{CC}, GND	V_{CC}, GND	V_{CC}, GND	None
Withstand Test Voltage	1500 Vdc	1500 Vdc	1500 Vdc	2500 Vdc	1500 Vdc	1500 Vdc
Avago Part # & Options						
Commercial	6N134	HCPL-5600	HCPL-5630	HCPL-5650	HCPL-6650	HCPL-6630
MIL-PRF-38534, Class H	6N134/883B	HCPL-5601	HCPL-5631	HCPL-5651	HCPL-6651	HCPL-6631
MIL-PRF-38534, Class K	HCPL-268K	HCPL-560K	HCPL-563K		HCPL-665K	HCPL-663K
Standard Lead Finish	Gold Plate[a]	Gold Plate[a]	Gold Plate[a]	Gold Plate[a]	Gold Plate[a]	Solder Pads[b]
Solder Dipped[b]	Option #200	Option #200	Option #200	Option #200		
Butt Cut/Gold Plate[a]	Option #100	Option #100	Option #100			
Gull Wing/Soldered[b]	Option #300	Option #300	Option #300			
Class H SMD Part #						
Prescript for all below	*None*	*5962-*	*None*	*None*	*None*	*None*
Gold Plate[a]	8102801EC	9085501HPC	8102802PC	8102805PC	8102804FC	
Solder Dipped[b]	8102801EA	9085501HPA	8102802PA	8102805PA		81028032A
Butt Cut/Gold Plate[a]	8102801UC	9085501HYC	8102802YC			
Butt Cut/Soldered[b]	8102801UA	9085501HYA	8102802YA			
Gull Wing/Soldered[b]	8102801TA	9085501HXA	8102802ZA			
Class K SMD Part #						
Prescript for all below	*5962-*	*5962-*	*5962-*		*5962-*	*5962-*
Gold Plate[a]	9800101KEC	9085501KPC	9800102KPC		9800104KFC	
Solder Dipped[b]	9800101KEA	9085501KPA	9800102KPA			9800103K2A
Butt Cut/Gold Plate[a]	9800101KUC	9085501KYC	9800102KYC			
Butt Cut/Soldered[b]	9800101KUA	9085501KYA	9800102KYA			
Gull Wing/Soldered[b]	9800101KTA	9085501KXA	9800102KZA			

a. Gold Plate lead finish: Maximum gold thickness of leads is <100 micro inches. Typical is 60 to 90 micro inches.

b. Solder lead finish: Sn63/Pb37.

chanhvinh.com

Functional Diagrams

16-Pin DIP	8-Pin DIP	8-Pin DIP	16-Pin Flat Pack	20-Pad LCCC
Through Hole	Through Hole	Through Hole	Unformed Leads	Surface Mount
2 Channels	1 Channel	2 Channels	4 Channels	2 Channels
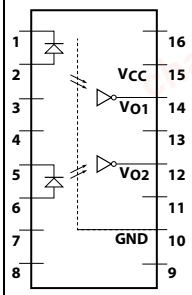	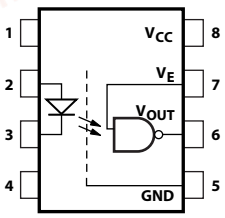	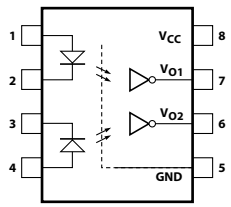	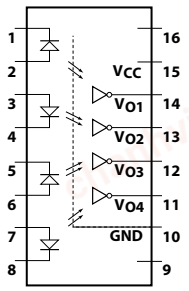	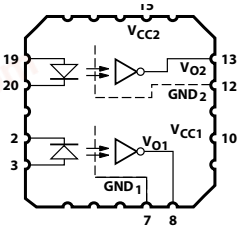

NOTE All DIP and flat pack devices have common V_{CC} and ground. Single channel DIP has an enable pin 7. LCCC (leadless ceramic chip carrier) package has isolated channels with separate V_{CC} and ground connections. All diagrams are "top view."

Outline Drawings

16-Pin DIP, Through Hole, 2 Channels

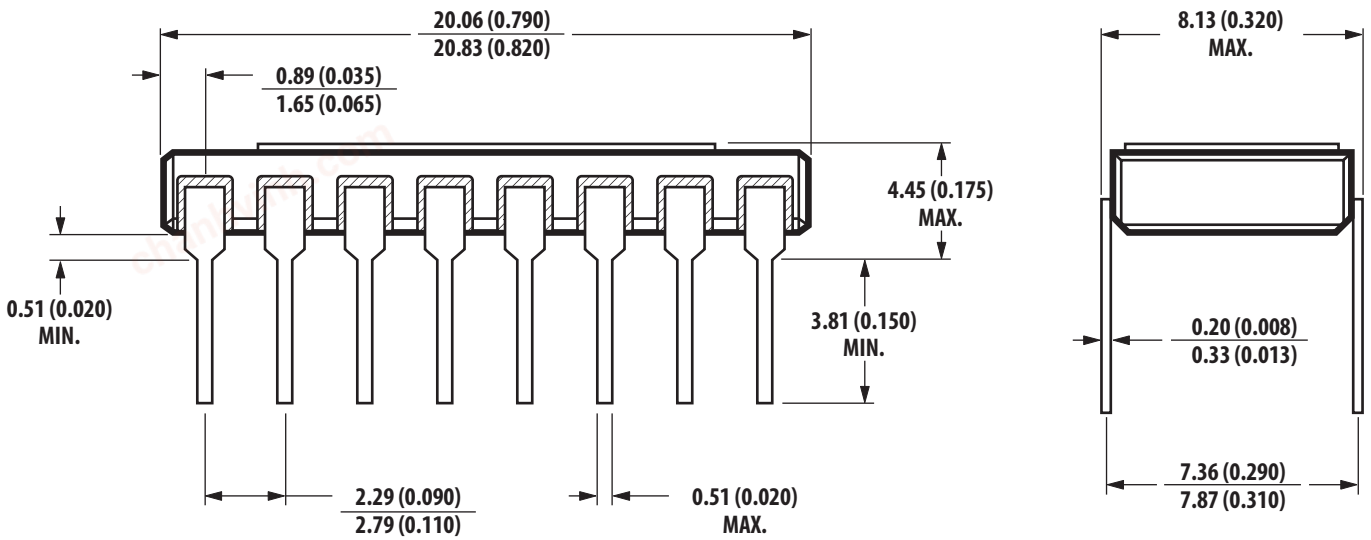

NOTE: DIMENSIONS IN MILLIMETERS (INCHES).

chanhvinh.com

Leaded Device Marking (8- and 16-Pin DIPS, Flat Pack)

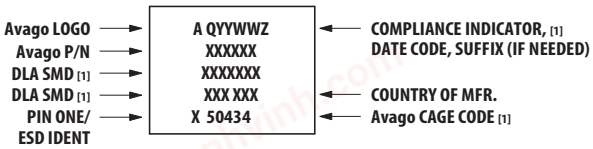

[1] QML PARTS ONLY

Leadless Device Marking (20 LCCC)

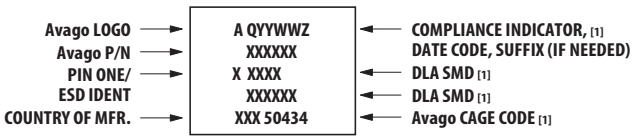

[1] QML PARTS ONLY

Outline Drawings (Continued)

8-Pin DIP, Through Hole, 1 and 2 Channels

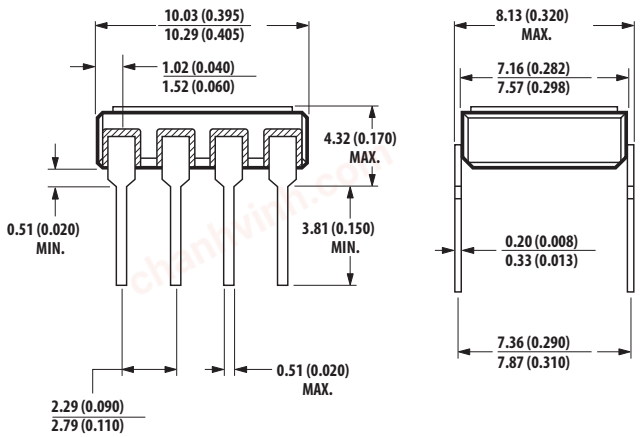

NOTE: DIMENSIONS IN MILLIMETERS (INCHES).

8-Pin DIP, Through Hole, 2 Channels, 2500 Vdc Withstand Test Voltage

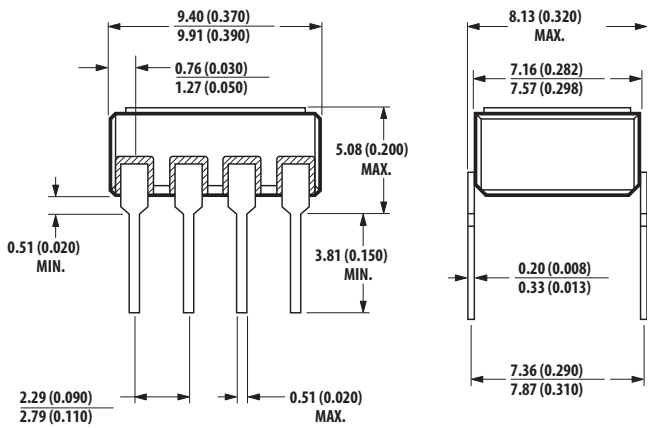

NOTE: DIMENSIONS IN MILLIMETERS (INCHES).

chanhvinh.com

Outline Drawings (Continued)

16-Pin Flat Pack, 4 Channels

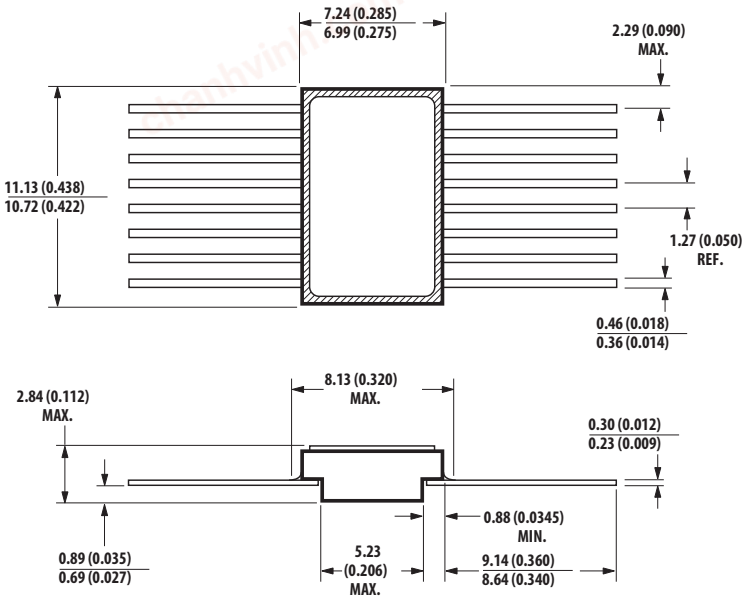

NOTE: DIMENSIONS IN MILLIMETERS (INCHES).

20-Terminal LCCC, Surface Mount, 2 Channels

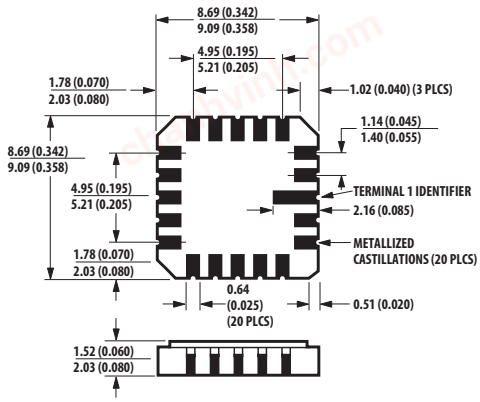

NOTE: DIMENSIONS IN MILLIMETERS (INCHES).
SOLDER THICKNESS 0.127 (0.005) MAX.

chanhvinh.com

Hermetic Optocoupler Options

Option	Description
100	Surface mountable hermetic optocoupler with leads trimmed for butt joint assembly. This option is available on Commercial, Class H and K products in 8- and 16 -pin DIP (see the following drawings for details). 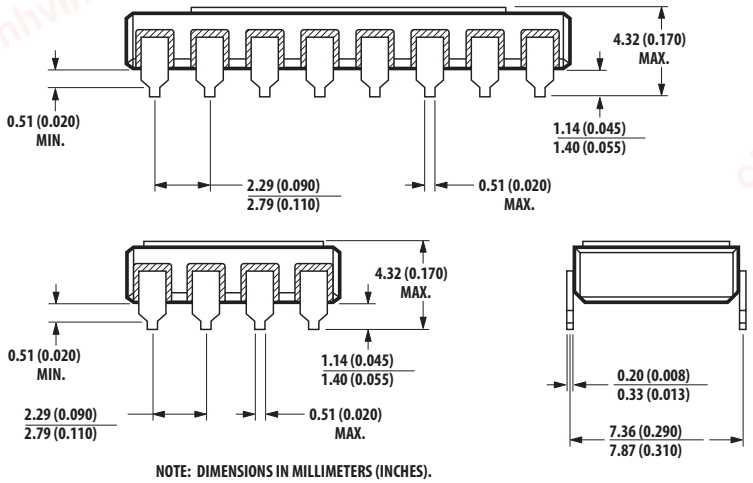 NOTE: DIMENSIONS IN MILLIMETERS (INCHES).
200	Lead finish is solder dipped rather than gold plated. This option is available on Commercial, Class H and K products in 8- and 16-pin DIP. DLA Drawing part numbers contain provisions for lead finish. All leadless chip carrier devices are delivered with solder dipped terminals as a standard feature.
300	Surface mountable hermetic optocoupler with leads cut and bent for gull wing assembly. This option is available on Commercial, Class H and K products in 8- and 16-pin DIP (see the following drawings for details). This option has solder dipped leads. 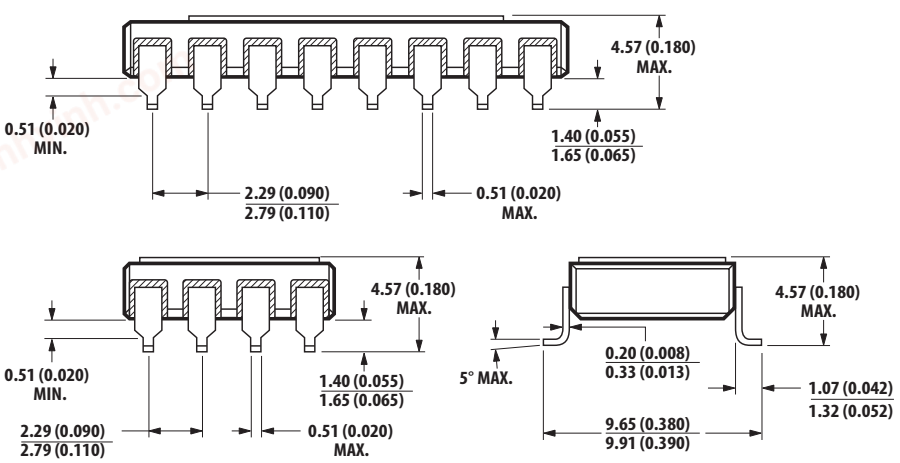 NOTE: DIMENSIONS IN MILLIMETERS (INCHES).

chanhvinh.com

Absolute Maximum Ratings

No derating required up to +125°C.

Parameter	Symbol	Min.	Max.	Units
Storage Temperature	T_S	–65	+150	°C
Operating Temperature	T_A	–55	+125	°C
Case Temperature	T_C		+170	°C
Junction Temperature	T_J		+175	°C
Lead Solder Temperature			260 for 10 sec	°C
Peak Forward Input Current (each channel, 1 ms duration)	$I_{F(PEAK)}$		40	mA
Average Input Forward Current (each channel)	$I_{F(AVG)}$		20	mA
Input Power Dissipation (each channel)			35	mW
Reverse Input Voltage (each channel)	V_R		5	V
Supply Voltage (1 minute maximum)	V_{CC}		7.0	V
Output Current (each channel)	I_O		25	mA
Output Voltage (each channel)	V_O		7	V
Output Power Dissipation (each channel)	P_O		40	mW
Package Power Dissipation (each channel)	P_D		200	mW

Single Channel Product Only

Parameter	Symbol	Min.	Max.	Units
Enable Input Voltage	V_E		5.5	V

8-Pin Ceramic DIP Single Channel Schematic

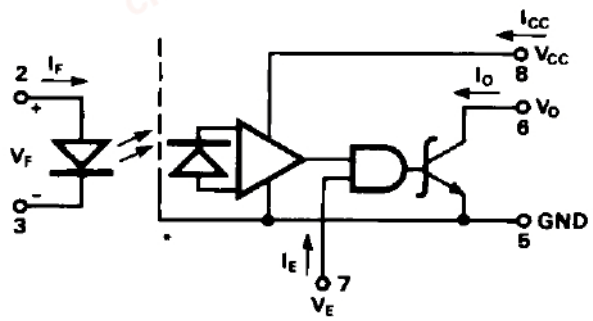

Note enable pin 7. An external 0.01 µF to 0.1 µF bypass capacitor must be connected between V_{CC} and ground for each package type.

chanhvinh.com

ESD Classification

(MIL-STD-883, Method 3015)

HCPL-5600/01/0K	▲, Class 1
6N134, 6N134/883B, HCPL-5630/31/3K, HCPL-5650/51, HCPL-6630/31/3K and HCPL-6650/51/5K	●, Class 3

Recommended Operating Conditions

Parameter	Symbol	Min.	Max.	Units
Input Current, Low Level, Each Channel	I_{FL}	0	250	µA
Input Current, High Level, Each Channel[a]	I_{FH}	10	20	mA
Supply Voltage, Output	V_{CC}	4.5	5.5	V
Fan Out (TTL Load) Each Channel	N		6	

a. Meets or exceeds DLA SMD.

Single Channel Product Only (see Note)

Parameter	Symbol	Min.	Max.	Units
High Level Enable Voltage	V_{EH}	2.0	V_{CC}	V
Low Level Enable Voltage	V_{EL}	0	0.8	V

NOTE No external pull up is required for a high logic state on the enable input.

chanhvinh.com

Electrical Characteristics (T_A = –55°C to +125°C, unless Otherwise Specified)

Parameter		Symbol	Test Conditions	Group A[a] Subgroups	Limits			Units	Fig.	Note
					Min.	Typ.[b]	Max.			
High Level Output Current		I_{OH}	V_{CC} = 5.5 V, V_O = 5.5 V, I_F = 250 µA	1, 2, 3		20	250	µA	1	c
Low Level Output Voltage		V_{OL}	V_{CC} = 5.5 V, I_F = 10 mA, I_{OL} (Sinking) = 10 mA	1, 2, 3		0.3	0.6	V	2	c, d
Current Transfer Ratio		h_F CTR	V_O = 0.6 V, I_F = 10 mA, V_{CC} = 5.5 V	1, 2, 3	100			%		c
Logic High Supply Current	Single Channel	I_{CCH}	V_{CC} = 5.5 V, I_F = 0 mA	1, 2, 3		9	14	mA		c
	Dual Channel		V_{CC} = 5.5 V, I_{F1} = I_{F2} = 0 mA			18	28	mA		e
	Quad Channel		V_{CC} = 5.5 V, I_{F1} = I_{F2} = I_{F3} = I_{F4} = 0 mA			25	42	mA		
Logic Low Supply Current	Single Channel	I_{CCL}	V_{CC} = 5.5 V, I_F = 20 mA	1, 2, 3		13	18	mA		c
	Dual Channel		V_{CC} = 5.5 V, I_{F1} = I_{F2} = 20 mA			26	36	mA		e
	Quad Channel		V_{CC} = 5.5 V, I_{F1} = I_{F2} = I_{F3} = I_{F4} = 20 mA			33	50	mA		
Input Forward Voltage		V_F	I_F = 20 mA	1, 2, 3		1.5	1.9	V	3	c, f
				1, 2		1.55	1.75	V	3	c, g
				3			1.85			
Input Reverse Breakdown Voltage		BV_R	I_R = 10 µA	1, 2, 3	5			V		c
Input-Output Leakage Current		I_{I-O}	RH ≤ 65%, T_A = 25°C, t = 5 s, V_{I-O} = 1500 Vdc	1			1.0	µA		h, i, j
			V_{I-O} = 2500 Vdc	1			1.0	µA		k
Capacitance Between Input/ Output		C_{I-O}	f = 1 MHz, T_C = 25°C	4		1.0	4.0	pF		c, l, m
Propagation Delay Time to High Output Level		t_{PLH}	V_{CC} = 5 V, R_L = 510 Ω, C_L = 50 pF, I_F = 13 mA	9		60	100	ns	4, 5, 6	c, n
				10, 11			140			
Propagation Delay Time to Low Output Level		t_{PHL}		9		55	100	ns		
				10, 11			120			
Output Rise Time		t_{LH}	R_L = 510 Ω, C_L = 50 pF, I_F = 13 mA	9, 10, 11		35	90	ns		c
Output Fall Time		t_{HL}				35	40			
Common Mode Transient Immunity at High Output Level		$\|CM_H\|$	V_{CM} = 50 V (PEAK), V_{CC} = 5 V, V_O (min.) = 2V, R_L = 510 Ω, I_F = 0 mA	9, 10, 11	1000	>10000		V/µs	7	c, m, o
Common Mode Transient Immunity at Low Output Level		$\|CM_L\|$	V_{CM} = 50 V (PEAK), V_{CC} = 5 V, V_O (max.) = 0.8 V, R_L = 510 Ω, I_F = 10 mA	9, 10, 11	1000	>10000		V/µs	7	c, m, o

chanhvinh.com

a. Commercial parts receive 100% testing at 25°C (Subgroups 1 and 9). SMD and 883B parts receive 100% testing at 25, 125, and 55°C (Subgroups 1 and 9, 2 and 10, 3 and 11, respectively).
b. All typical values are at V_{CC} = 5 V, T_A = 25°C.
c. Each channel.
d. It is essential that a bypass capacitor (0.01 to 0.1 µF ceramic) be connected from V_{CC} to ground. Total lead length between both ends of this external capacitor and the isolator connections should not exceed 20 mm.
e. The HCPL-6630, HCPL-6631, and HCPL-663K dual channel parts function as two independent single channel units. Use the single channel parameter limits for each channel.
f. Not required for 6N134, 6N134/883B, 8102801, HCPL-268K, and 5962-9800101 types.
g. Required for 6N134, 6N134/883B, 8102801, HCPL-268K, and 5962-9800101 types.
h. All devices are considered two-terminal devices; I_{I-O} is measured between all input leads or terminals shorted together and all output leads or terminals shorted together.
i. This is a momentary withstand test, not an operating condition.
j. Not required for HCPL-5650, HCPL-5651, and 8102805 types.
k. Required for HCPL-5650, HCPL-5651, and 8102805 types only.
l. Measured between each input pair shorted together and all output connections for that channel shorted together.
m. Parameters are tested as part of device initial characterization and after design and process changes. Parameters are guaranteed to limits specified for all lots not specifically tested.
n. t_{PHL} propagation delay is measured from the 50% point on the leading edge of the input pulse to the 1.5 V point on the leading edge of the output pulse. The t_{PLH} propagation delay is measured from the 50% point on the trailing edge of the input pulse to the 1.5 V point on the trailing edge of the output pulse.
o. CM_L is the maximum rate of rise of the common mode voltage that can be sustained with the output voltage in the logic low state (V_O< 0.8 V). CM_H is the maximum rate of fall of the common mode voltage that can be sustained with the output voltage in the logic high state (V_O > 2.0 V).

Single Channel Product Only

Parameter	Symbol	Test Conditions	Group A[a] Subgroups	Limits			Units	Fig.	Note
				Min.	Typ.[b]	Max.			
Low Level Enable Current	I_{EL}	V_{CC} = 5.5 V, V_E = 0.5 V	1, 2, 3	–2.0	–1.45		mA		
High Level Enable Voltage	V_{EH}		1, 2, 3	2.0			V		c
Low Level Enable Voltage	V_{EL}		1, 2, 3			0.8	V		

a. Standard parts receive 100% testing at 25°C (Subgroups 1 and 9). SMD and 883B parts receive 100% testing at 25, 125, and 55°C (Subgroups 1 and 9, 2 and 10, 3 and 11, respectively).
b. All typical values are at V_{CC} = 5 V, T_A = 25°C.
c. No external pull up is required for a high logic state on the enable input.

chanhvinh.com

Typical Characteristics, T_A = 25°C, V_{CC} = 5 V

Parameter	Sym.	Typ.	Units	Test Conditions	Fig.	Note
Input Capacitance	C_{IN}	60	pF	V_F = 0 V, f = 1 MHz		a
Input Diode Temperature Coefficient	$\Delta V_F/\Delta T_A$	–1.5	mV/°C	I_F = 20 mA		a
Resistance (Input-Output)	R_{I-O}	10^{12}	Ω	V_{I-O} = 500 V		b

a. Each channel.

b. All devices are considered two-terminal devices; I_{I-O} is measured between all input leads or terminals shorted together and all output leads or terminals shorted together.

Single Channel Product Only

Parameter	Sym.	Typ.	Units	Test Conditions	Fig.	Note
Propagation Delay Time of Enable from V_{EH} to V_{EL}	t_{ELH}	35	ns	R_L = 510 Ω, C_L = 50 pF, I_F = 13 mA, V_{EH} = 3 V, V_{EL} = 0V	8, 9	a, b
Propagation Delay Time of Enable from V_{EL} to V_{EH}	t_{EHL}	35	ns			a, c

a. Each channel.

b. The t_{ELH} enable propagation delay is measured from the 1.5 V point on the trailing edge of the enable input pulse to the 1.5V point on the trailing edge of the output pulse.

c. The t_{EHL} enable propagation delay is measured from the 1.5 V point on the leading edge of the enable input pulse to the 1.5V point on the leading edge of the output pulse.

Dual and Quad Channel Product Only

Parameter	Sym.	Typ.	Units	Test Conditions	Fig.	Note
Input-Input Leakage Current	I_{I-I}	0.5	nA	Relative Humidity ≤ 65% V_{I-I} = 500V, t = 5 s		a
Resistance (Input-Input)	R_{I-I}	10^{12}	Ω	V_{I-I} = 500V		a
Capacitance (Input-Input)	C_{I-I}	0.55	pF	f = 1 MHz		a

a. Measured between adjacent input pairs shorted together for each multichannel device.

Figure 1 High Level Output Current vs. Temperature

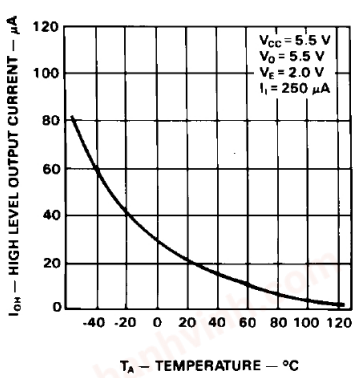

Figure 2 Input-Output Characteristics

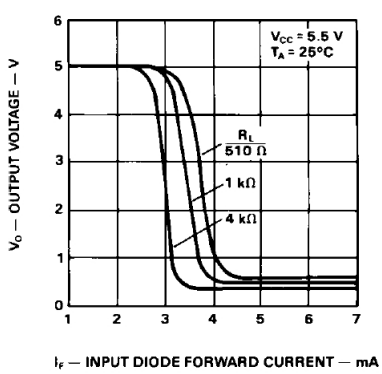

Figure 3 Input Diode Forward Characteristics

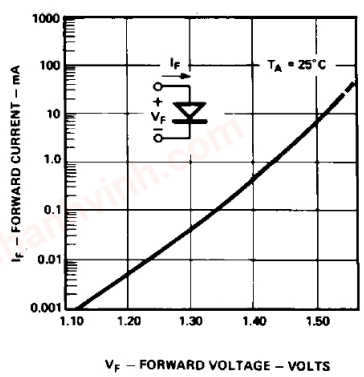

chanhvinh.com

Figure 4 Test Circuit for t_{PHL} and t_{PLH}

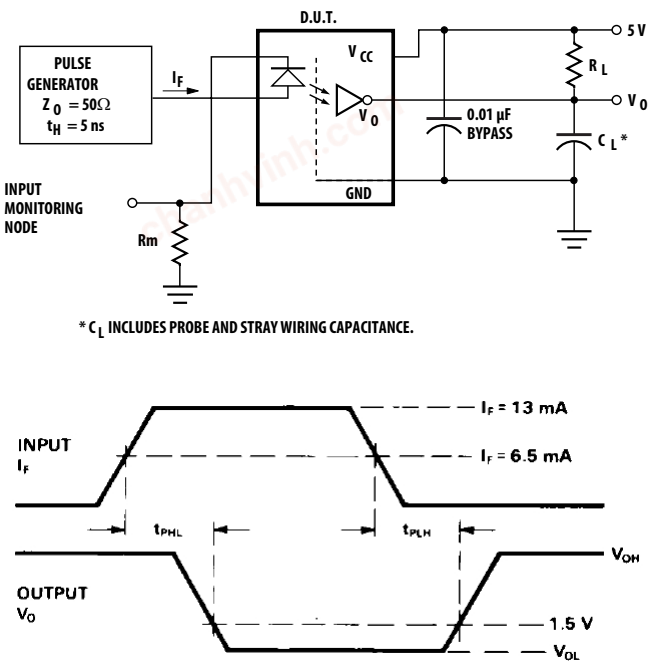

Figure 5 Propagation Delay, t_{PHL} and t_{PLH} vs. Pulse Input Current, I_{FH}

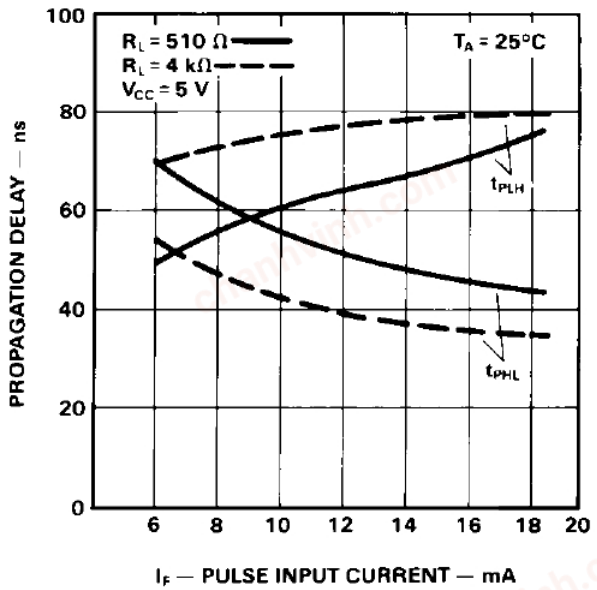

Figure 6 Propagation Delay vs. Temperature

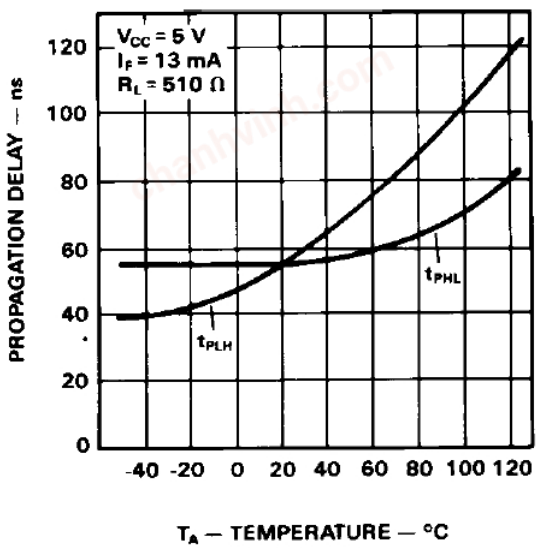

Figure 7 Test Circuit for Common Mode Transient Immunity and Typical Waveforms

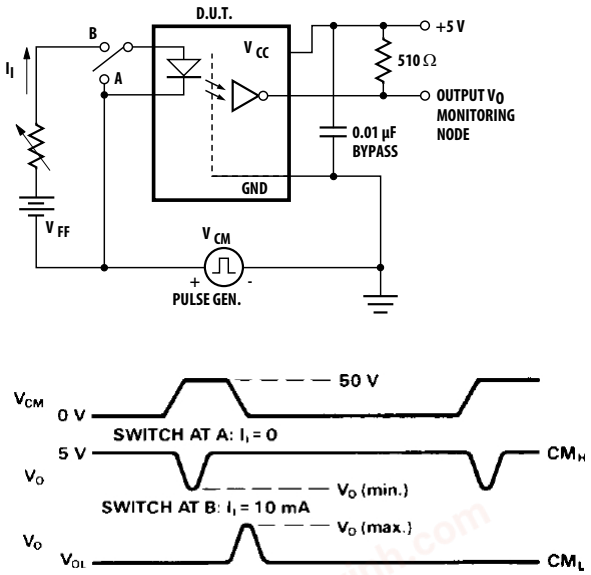

chanhvinh.com

Figure 8 Test Circuit for t_{EHL} and t_{ELH}

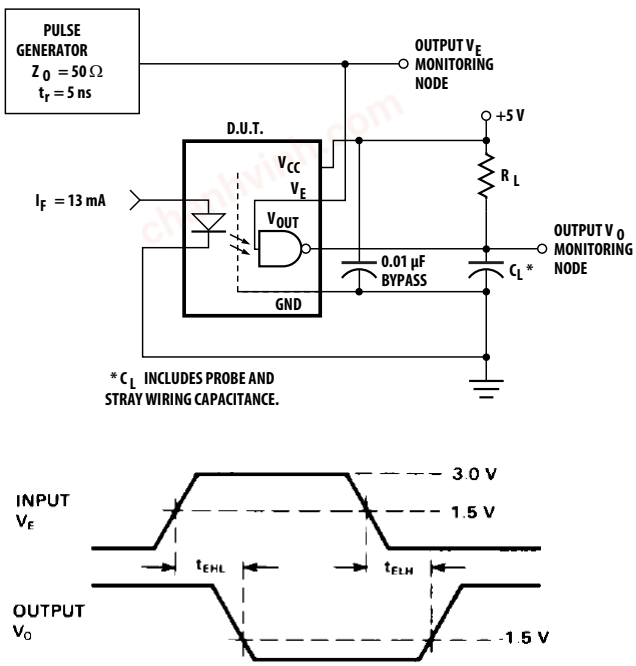

Figure 9 Enable Propagation Delay vs. Temperature

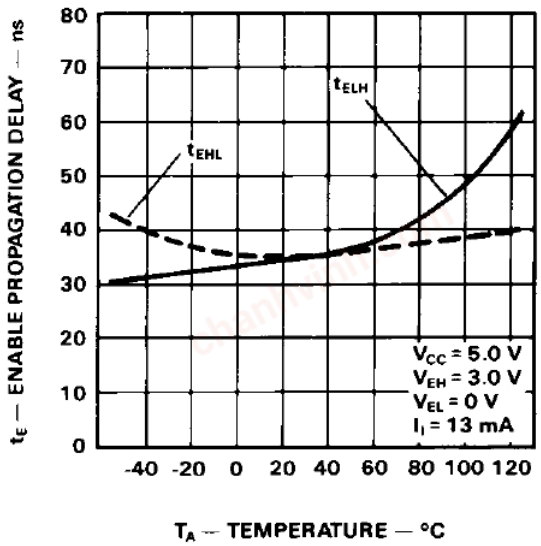

Figure 10 Operating Circuit for Burn-In and Steady State Life Tests

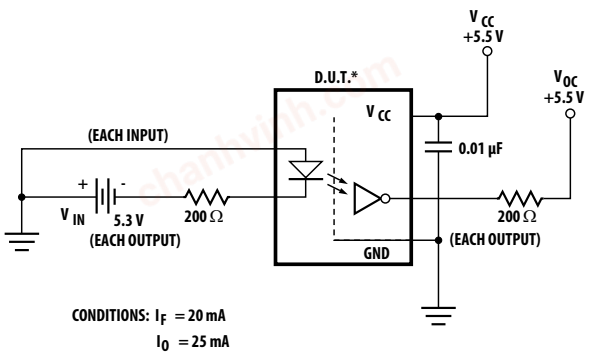

CONDITIONS: I_F = 20 mA
I_O = 25 mA

T_A = +125 °C

* ALL CHANNELS TESTED SIMULTANEOUSLY.

chanhvinh.com

For product information and a complete list of distributors, please go to our web site: www.broadcom.com.

Broadcom, the pulse logo, Connecting everything, Avago Technologies, and the A logo are the trademarks of Broadcom in the United States, certain other countries and/or the EU.

Copyright © 2012–2016 Broadcom. All Rights Reserved.

The term "Broadcom" refers to Broadcom Limited and/or its subsidiaries. For more information, please visit www.broadcom.com.

Broadcom reserves the right to make changes without further notice to any products or data herein to improve reliability, function, or design.

Information furnished by Broadcom is believed to be accurate and reliable. However, Broadcom does not assume any liability arising out of the application or use of this information, nor the application or use of any product or circuit described herein, neither does it convey any license under its patent rights nor the rights of others.

AV02-1336EN – September 30, 2016