chanhvinh.com

Bridgetek Pte Ltd
FT801
(Embedded Video Engine)



The FT801 is an easy to use graphic controller targeted for embedded applications to generate high-quality Human Machine Interfaces (HMIs). It has the following features:

- FT801 functionality includes graphic controller, audio processing, and capacitive touch controller interface.
- Compatibility mode allows display code to be run on FT801 or FT800. Extended mode enables multi-touch capabilities for FT801.
- Embedded Video Engine (EVE) with widget support can offload the system MPU and provide a variety of graphic features
- Built-in graphics operations allow users with little expertise to create high-quality display
- Support capacitive touch screen with up to 5 touches detection
- Hardware engine can recognize touch tags and track touch movement. It provides notification for up to 255 touch tags.
- Enhanced sketch processing
- Programmable interrupt controller provides interrupts to host MPU/MCU
- Built-in 12MHz crystal oscillator with PLL providing 48MHz or 36MHz system clock
- Clock switch command for internal or external clock source. External 12MHz crystal or clock input can be used for higher accuracy.
- Video RGB parallel output (default RGB data width of 6-6-6) with 2 bits dithering; configurable to support resolution up to 512x512 and R/G/B data width of 1 to 6
- Programmable timing to adjust HSYNC and VSYNC timing, enabling interface to numerous displays
- Support for LCD display in WQVGA (480x272) and QVGA (320x240) formats with data enable (DE) support mode and VSYNC/HSYNC mode
- The FT801 calculates for 8-bit colour despite only providing pins for 6-bit (RGB-6,6,6); this improves the half tone appearance
- Display enable control output to LCD panel
- Mono audio channel output with PWM output
- Built-in sound synthesizer
- Audio wave playback for mono 8-bit linear PCM, 4-bit ADPCM and μ-Law coding format at sampling frequency from 8 kHz to 48 kHz. Built-in digital filter reduces the system design complexity of external filtering
- PWM output for backlight dimming control for LED
- Low power consumption for portable application, 24mA active (typical) and 250 uA sleep (typical)
- No frame buffer RAM required
- Advanced object oriented architecture enables low cost MPU/MCU as system host using I^2C and SPI interfaces
- Power mode control allows chip to be put in power down, sleep and standby states
- Supports host interface I/O voltage from 1.8V to 3.3V
- Standard serial interface to host MPU/MCU with SPI up to 30MHz or I^2C clocking up to 3.4MHz
- Internal voltage regulator supplies 1.2V to the digital core
- -40°C to 85°C extended operating temperature range
- Available in a compact Pb-free, VQFN-48, 7mm X 7mm X 0.9mm package, RoHS compliant

Neither the whole nor any part of the information contained in, or the product described in this manual, may be adapted or reproduced in any material or electronic form without the prior written consent of the copyright holder. This product and its documentation are supplied on an as-is basis and no warranty as to their suitability for any particular purpose is either made or implied. Bridgetek Pte Ltd will not accept any claim for damages howsoever arising as a result of use or failure of this product. Your statutory rights are not affected. This product or any variant of it is not intended for use in any medical appliance, device or system in which the failure of the product might reasonably be expected to result in personal injury. This document provides preliminary information that may be subject to change without notice. No freedom to use patents or other intellectual property rights is implied by the publication of this document. Bridgetek Pte Ltd, 1 Tai Seng Avenue, Tower A, #03-05, Singapore 536464. Singapore Registered Company Number: 201542387H.

chanhvinh.com

1 Typical Applications

- Point of Sales Machines
- Multi-function Printers
- Instrumentation
- Home Security Systems
- Graphic touch pad – remote, dial pad
- Tele / Video Conference Systems
- Phones and Switchboards
- Medical Appliances
- Blood Pressure displays
- Heart monitors
- Glucose level displays
- Breathalyzers
- Gas chromatographs
- Power meter
- Home appliance devices
- Set-top box
- Thermostats
- Sprinkler system displays
- Medical Appliances
- GPS / Satnav
- Vending Machine Control Panels
- Elevator Controls
- ……and many more

1.1 Part Numbers

Part Number	Package
FT801Q-x	48 Pin VQFN, pitch 0.5mm, body 7mm x 7mm x 0.9mm

Table 1- Video Controller Part Numbers

Note: Packaging codes for x is:

-R: Taped and Reel, (VQFN in 2500 pieces per reel)

-T: Tray packing, (VQFN in 250 pieces per tray)

For example: FT801Q-R is 2500 VQFN pieces in taped and reel packaging

Copyright © Bridgetek Pte Ltd

chanhvinh.com

2 FT801 Block Diagram

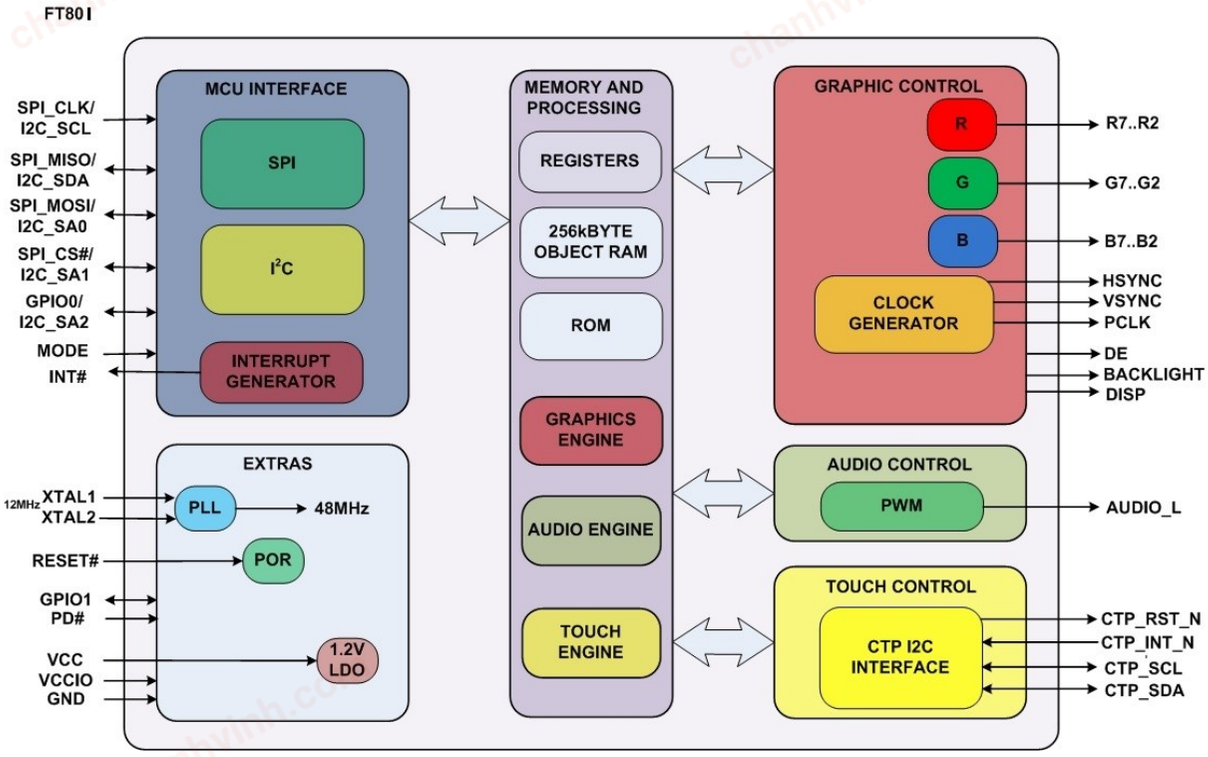

Figure 2-1 FT801 Block Diagram

For a description of each function please refer to Section 4.

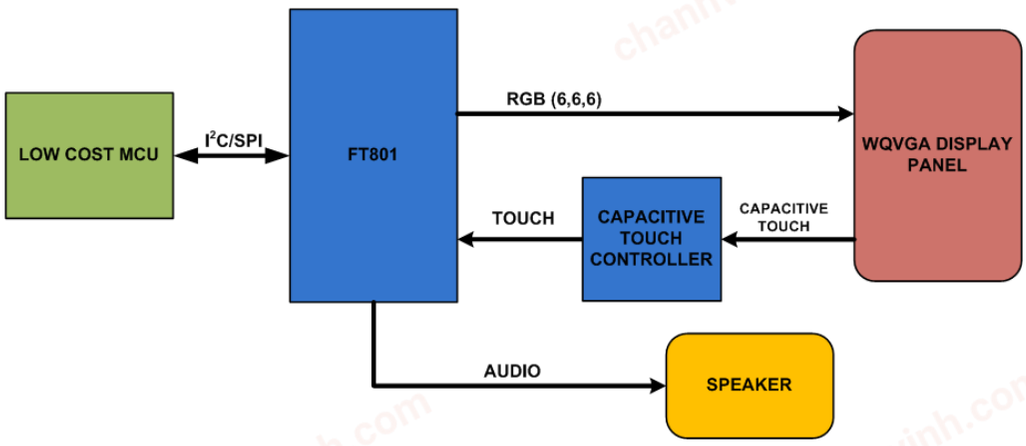

Figure 2-2 FT801 System Design Diagram

FT801 with EVE (Embedded Video Engine) technology simplifies the system architecture for advanced human machine interfaces (HMIs) by providing support for display, audio, and touch as well as an object oriented architecture approach that extends from display creation to the rendering of the graphics.

Copyright © Bridgetek Pte Ltd

chanhvinh.com

Table of Contents

1 Typical Applications 2
1.1 Part Numbers 2
2 FT801 Block Diagram 3
3 Device Pin Out and Signal Description 6
3.1 VQFN-48 Package Pin Out 6
3.2 Pin Description 6
4 Function Description 9
4.1 Serial Host Interface 9
4.1.1 SPI Interface 11
4.1.2 I²C Interface 11
4.1.3 Serial Data Protocol 11
4.1.4 Host Memory Read 11
4.1.5 Host Memory Write 12
4.1.6 Host Command 12
4.1.7 Interrupts 13
4.2 System Clock 14
4.2.1 Clock Source 14
4.2.2 Phase Locked Loop 14
4.2.3 Clock Enable 15
4.2.4 Clock Frequency 15
4.3 Graphics Engine 15
4.3.1 Introduction 15
4.3.2 ROM and RAM Fonts 16
4.4 Parallel RGB Interface 19
4.5 Miscellaneous Control 20
4.5.1 Backlight Control Pin 20
4.5.2 DISP Control Pin 20
4.5.3 General Purpose IO pins 20
4.5.4 Pins Drive Current Control 20
4.6 Audio Engine 21
4.6.1 Sound Synthesizer 21
4.6.2 Audio Playback 23
4.7 Touch-Screen Engine 24
4.7.1 Compatibility mode 24

Copyright © Bridgetek Pte Ltd

chanhvinh.com

4.7.2 Extended mode 25
4.8 Power Management 25
4.8.1 Power supply 25
4.8.2 Internal Regulator and POR 26
4.8.3 Power Modes 27
5 FT801 Memory Map 30
5.1 FT801 Registers 30
6 Devices Characteristics and Ratings 34
6.1 Absolute Maximum Ratings 34
6.2 DC Characteristics 34
6.3 AC Characteristics 35
6.3.1 System clock 35
6.3.2 Host Interface SPI Mode 0 35
6.3.3 Host Interface I2C Mode Timing 36
6.3.4 RGB Video Timing 36
7 Application Examples 38
7.1 Examples of LCD Interface connection 38
8 Package Parameters 39
8.1 Part Markings 39
8.1.1 Top Side 39
8.1.2 Bottom Side 39
8.2 VQFN-48 Package Dimensions 40
8.3 Solder Reflow Profile 41
9 Contact Information 42
Appendix A – References 43
Document References 43
Acronyms & Abbreviations 43
Appendix B - List of Figures and Tables 44
List of Figures 44
List of Tables 44
Appendix C - Revision History 46

Copyright © Bridgetek Pte Ltd

chanhvinh.com

3 Device Pin Out and Signal Description

3.1 VQFN-48 Package Pin Out

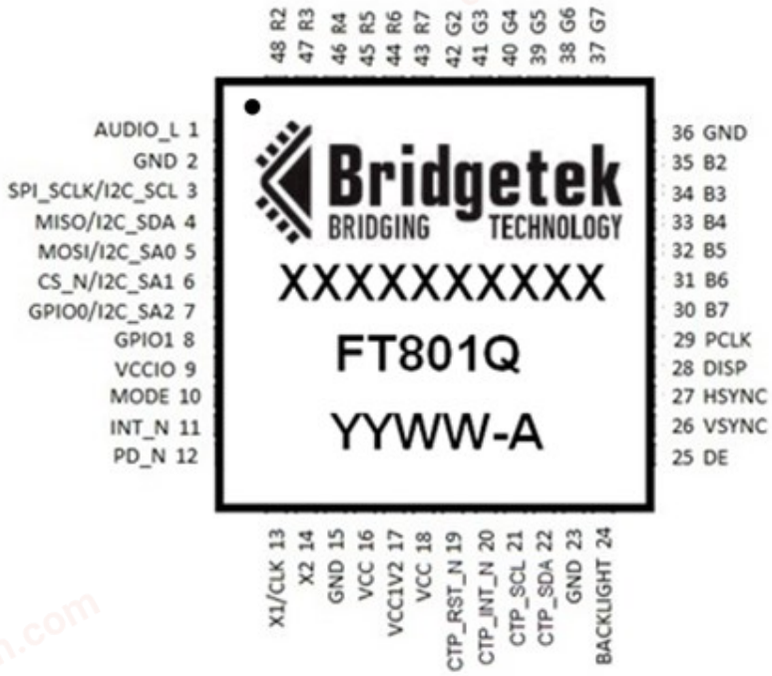

Figure 3-1 Pin Configuration VQFN-48 (top view)

3.2 Pin Description

Pin No.	Name	Type	Description
1	AUDIO_L	O	Audio PWM out, push-pull output, 16mA sink/source current. Pad powered from pin VCC.
2	GND	P	Ground
3	SPI_SCLK/ I2C_SCL	I	In SPI mode: SPI SCLK input. In I2C mode: SCL input, need external 1kΩ ~ 4.7kΩ pull up to VCCIO. Input pad with Schmitt trigger, 3.3V tolerant. Pad powered from pin VCCIO.
4	MISO/ I2C_SDA	I/O	In SPI mode: SPI MISO output. In I2C mode: SDA input/Open Drain Output, need external1kΩ ~ 4.7kΩ pull up to VCCIO. Input with Schmitt trigger, 3.3V tolerant, 4/8/12/16mA sink/source current. Pad powered from pin VCCIO.
5	MOSI/ I2C_SA0	I	In SPI mode: SPI MOSI input. In I2C mode: Input, bit 0 of I2C device address. Input pad, 3.3V tolerant. Pad powered from pin VCCIO.
6	CS_N/ I2C_SA1	I	In SPI mode: SPI CS_N input, active low. In I2C mode: Input, bit 1 of I2C device address. Input pad, 3.3V tolerant. Pad powered from pin VCCIO.
7	GPIO0/ I2C_SA2	I/O	In SPI mode: General purpose input, output port. In I2C mode: Input, bit 2 of I2C device address. Push-pull, three-state output. 3.3V tolerant, 4/8/12/16mA sink/source current. Pad powered from pin VCCIO.
8	GPIO1	I/O	General purpose input, output port. Push-pull, three-state output. 3.3V tolerant, 4/8/12/16mA

Copyright © Bridgetek Pte Ltd

chanhvinh.com

Pin No.	Name	Type	Description
			sink/source current. Pad powered from pin VCCIO.
9	VCCIO	P	I/O power supply, connect a 0.1uF decoupling capacitor. Support 1.8V, 2.5V or 3.3V. Note: VCCIO supply to IO pads from pin 3 to 12 only.
10	MODE	I	Host interface SPI(pull low) or I2C(pull up) mode select input, 3.3V tolerant Pad powered from pin VCCIO.
11	INT_N	OD	Host Interrupt, open drain output, active low, pull up to VCCIO through a 1kΩ ~10kΩ resistor.
12	PD_N	I	Power down input, active low, 3.3V tolerant, pull up to VCCIO through 47kΩ resistor and 100nF to ground. Pad powered from pin VCCIO.
13	X1/ CLK	I	Crystal oscillator or clock input; Connect to GND if not used. 3.3V peak input allowed. Pad powered from pin VCC.
14	X2	O	Crystal oscillator output; leave open if not used. Pad powered from pin VCC.
15	GND	P	Ground
16	VCC	P	3.3V power supply input.
17	VCC1V2	O	1.2V regulator output pin. Connect a 4.7uF decoupling capacitor to GND.
18	VCC	P	3.3V power supply input.
19	CTP_RST_N	O	Connect to reset or wake signal of the CTPM. Output, open source, external pull-down resistor required. Pad powered from pin VCC.
20	CTP_INT_N	I	Connect to interrupt or ready pin of the CTPM. Input. Pad powered from pin VCC.
21	CTP_SCL	I/OD	Connect to I2C SCL pin of the CTPM. Plain input, open-drain output. Pad powered from pin VCC.
22	CTP_SDA	I/OD	Connect to I2C SDA pin of the CTPM. Plain input, open-drain output. Pad powered from pin VCC.
23	GND	P	Ground
24	BACKLIGHT	O	LED Backlight brightness PWM controls signal, push-pull output, 4/8mA sink/source current. Pad powered from pin VCC.
25	DE	O	LCD Data Enable, push-pull output, 4/8mA sink/source current. Pad powered from pin VCC.
26	VSYNC	O	LCD Vertical Sync, push-pull output, 4/8mA sink/source current. Pad powered from pin VCC.
27	HSYNC	O	LCD Horizontal Sync, push-pull output, 4/8mA sink/source current. Pad powered from pin VCC.
28	DISP	O	General purpose output pin for LCD Display Enable, push-pull output, 4/8mA sink/source current. Control by writing to Bit 7 of REG_GPIO register. Pad powered from pin VCC.
29	PCLK	O	LCD Pixel Clock, push-pull output, 4/8mA sink/source current. Pad powered from pin VCC.
30	B7	O	Bit 7 of Blue RGB signals, push-pull output, 4/8mA sink/source current. Pad powered from pin VCC.
31	B6	O	Bit 6 of Blue RGB signals, push-pull output, 4/8mA sink/source current. Pad powered from pin VCC.
32	B5	O	Bit 5 of Blue RGB signals, push-pull output, 4/8mA sink/source current. Pad powered from pin VCC.
33	B4	O	Bit 4 of Blue RGB signals, push-pull output, 4/8mA sink/source current. Pad powered from pin VCC.
34	B3	O	Bit 3 of Blue RGB signals, push-pull output, 4/8mA

Copyright © Bridgetek Pte Ltd

chanhvinh.com

Pin No.	Name	Type	Description
			sink/source current. Pad powered from pin VCC.
35	B2	O	Bit 2 of Blue RGB signals, push-pull output, 4/8mA sink/source current. Pad powered from pin VCC.
36	GND	P	Ground
37	G7	O	Bit 7 of Green RGB signals, push-pull output, 4/8mA sink/source current. Pad powered from pin VCC.
38	G6	O	Bit 6 of Green RGB signals, push-pull output, 4/8mA sink/source current. Pad powered from pin VCC.
39	G5	O	Bit 5 of Green RGB signals, push-pull output, 4/8mA sink/source current. Pad powered from pin VCC.
40	G4	O	Bit 4 of Green RGB signals, push-pull output, 4/8mA sink/source current. Pad powered from pin VCC.
41	G3	O	Bit 3 of Green RGB signals, push-pull output, 4/8mA sink/source current. Pad powered from pin VCC.
42	G2	O	Bit 2 of Green RGB signals, push-pull output, 4/8mA sink/source current. Pad powered from pin VCC.
43	R7	O	Bit 7 of Red RGB signals, push-pull output, 4/8mA sink/source current. Pad powered from pin VCC.
44	R6	O	Bit 6 of Red RGB signals, push-pull output, 4/8mA sink/source current. Pad powered from pin VCC.
45	R5	O	Bit 5 of Red RGB signals, push-pull output, 4/8mA sink/source current. Pad powered from pin VCC.
46	R4	O	Bit 4 of Red RGB signals, push-pull output, 4/8mA sink/source current. Pad powered from pin VCC.
47	R3	O	Bit 3 of Red RGB signals, push-pull output, 4/8mA sink/source current. Pad powered from pin VCC.
48	R2	O	Bit 2 of Red RGB signals, push-pull output, 4/8mA sink/source current. Pad powered from pin VCC.
EP	GND	P	Ground. Exposed thermal pad.

Table 3-1 FT801Q pin description

Note:

P : Power or ground
I : Input
O : Output
OD : Open drain output
I/O : Bi-direction Input and Output

chanhvinh.com

chanhvinh.com

4 Function Description

The FT801 is a single chip, embedded graphic controller with the following function blocks:

- Serial Host Interface
- System Clock
- Graphics Engine
- Parallel RGB video interface
- Audio Engine
- Touch-screen support and interface
- Power Management

The functions for each block are briefly described in the following subsections.

4.1 Serial Host Interface

The FT801 uses a standard serial interface to communicate with most types of microcontrollers and microprocessors. The interface mode is configurable by pull down for SPI and pull up for I²C on pin 10 (MODE). Figure 4-1 shows the two alternative mode connections.

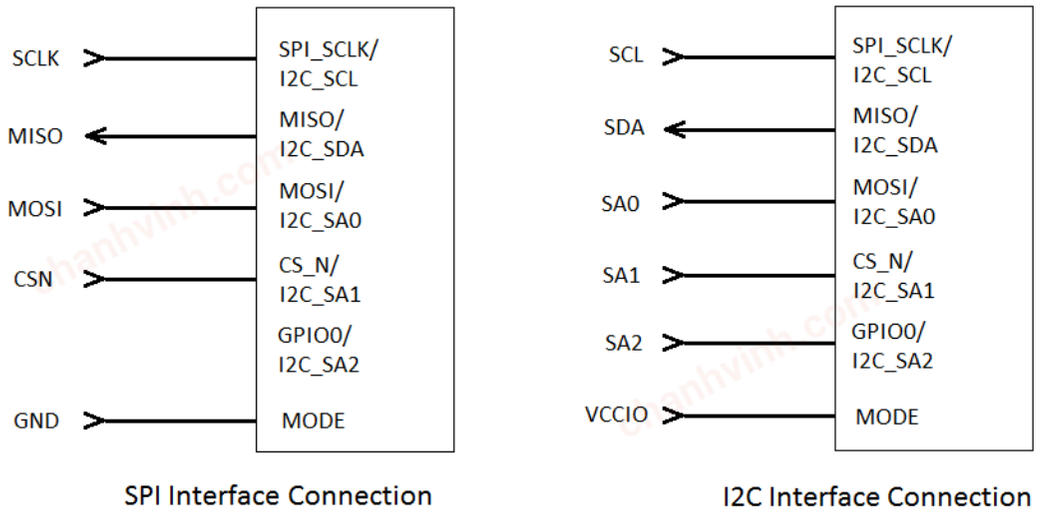

Figure 4-1 Host Interface Options

Copyright © Bridgetek Pte Ltd

chanhvinh.com

Figure 4-2 illustrates a direct connection to a 1.8-3.3V IO MPU/MCU.

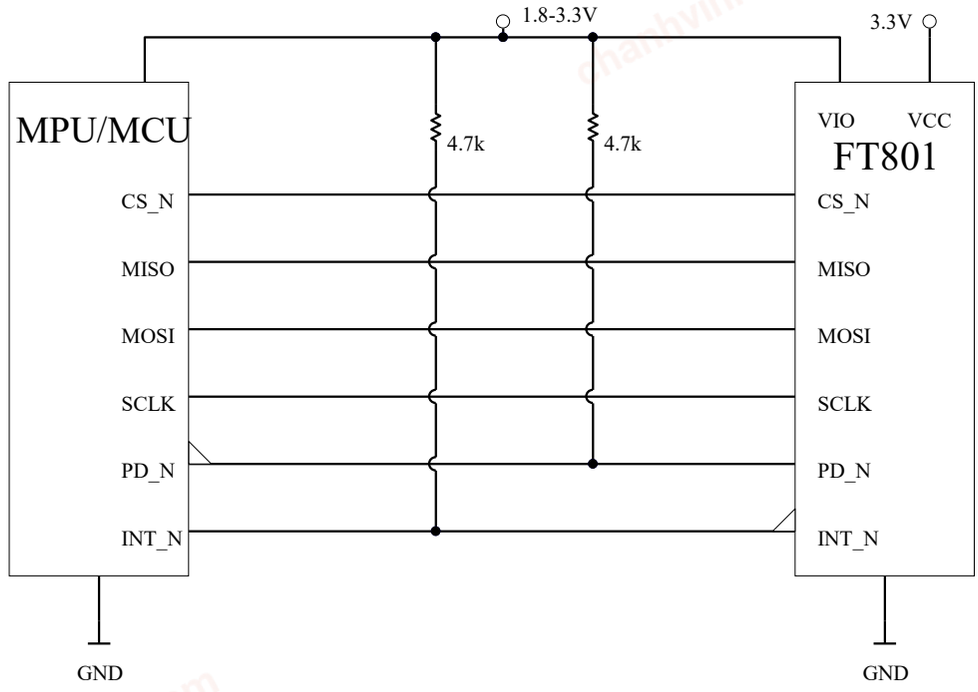

Figure 4-2 SPI Interface 1.8-3.3V connection

Figure 4-3 illustrates the FT801 connected to a 5V IO MPU/MCU. The 74LCX125 logic buffer can tolerate 5V signal from the MPU/MCU, and the FT801 input signals are limited to 3.3V.

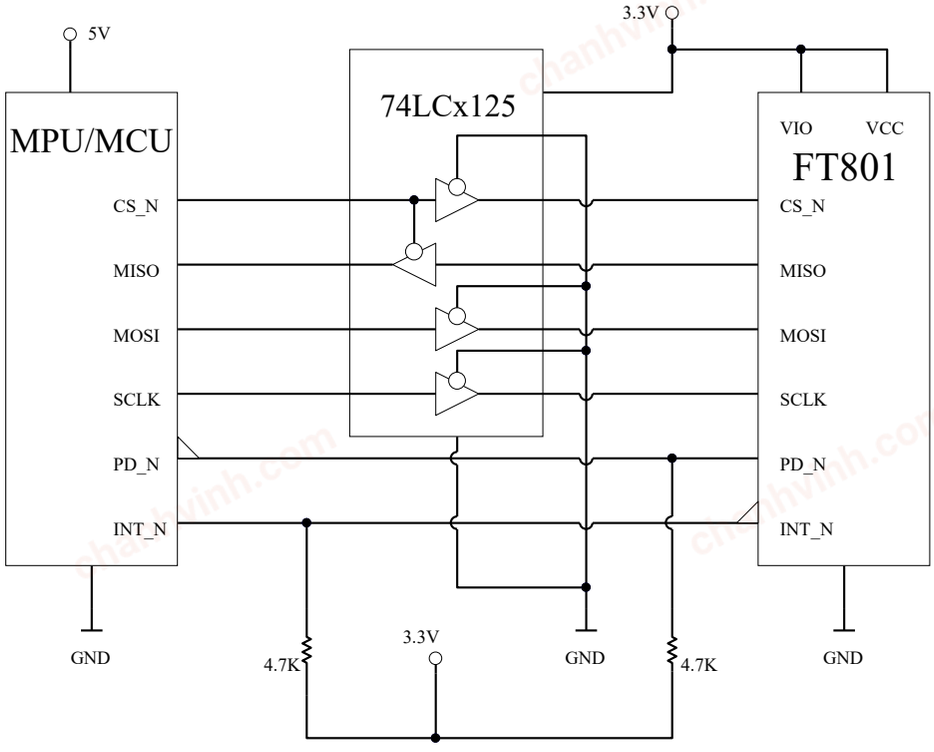

Figure 4-3 SPI Interface 5V connection

Copyright © Bridgetek Pte Ltd

chanhvinh.com

4.1.1 SPI Interface

The SPI slave interface operates up to 30MHz. Only SPI mode 0 is currently supported. Refer to section 6.3.2 for detailed timing specification.

The SPI interface is selected when the MODE pin is tied to GND.

4.1.2 I²C Interface

The I²C slave interface operates up to 3.4MHz, supporting standard-mode, fast-mode, fast-mode plus and high-speed mode. Refer to section 6.3.3 for detailed timing specification.

The I²C device address is configurable between 20h to 27h depending on the I²C_SA[2:0] pin setting, i.e. the 7-bit I2C slave address is 0b'0100$A_2A_1A_0$.

The I²C interface is selected when the MODE pin is tied to VCCIO.

4.1.3 Serial Data Protocol

The FT801 appears to the host MPU/MCU as a memory-mapped SPI or I²C device. The host communicates with the FT801 using reads and writes to a large (4 megabyte) address space. Within this address space are dedicated areas for graphics, audio and touch control. Refer to section 5 for the detailed memory map.

The host reads and writes the FT801 address space using SPI or I²C transactions. These transactions are memory read, memory write and command write. Serial data is sent by the most significant bit first. For I²C transactions, the same byte sequence is encapsulated in the I²C protocol.

For SPI operation, each transaction starts with CS_N goes low and ends when CS_N goes high. There's no limit on data length within one transaction, as long as the memory address is continuous.

4.1.4 Host Memory Read

For SPI memory read transaction, the host sends two zero bits, followed by the 22-bit address. This is followed by a dummy byte. After the dummy byte, the FT801 responds to each host byte with read data bytes.

7	6	5	4	3	2	1	0	
0	0	Address [21:16]						Write Address
Address [15:8]								
Address [7:0]								
Dummy byte								
Byte 0								Read Data
Byte *n*								

Table 4-1 Host memory read transaction (SPI)

For I²C memory read transaction, bytes are packed in the I²C protocol as follow:

[start] <DEVICE ADDRESS + write bit>
<00b+Address[21:16]>

Copyright © Bridgetek Pte Ltd

chanhvinh.com

<Address[15:8]>
<Address[7:0]>
[restart] <DEVICE ADDRESS + read bit>
<Read data byte 0>
....
<Read data byte n> [stop]

4.1.5 Host Memory Write

For SPI memory write transaction, the host sends a '1' bit and '0' bit, followed by the 22-bit address. This is followed by the write data.

7	6	5	4	3	2	1	0	
1	0	Address [21:16]						Write Address
Address [15:8]								
Address [7:0]								
Byte 0								Write Data
Byte *n*								

Table 4-2 Host memory write transaction (SPI)

For I²C memory writes transaction, bytes are packed in the I²C protocol as follow:-

[start] <DEVICE ADDRESS + write bit>
<10b,Address[21:16]>
<Address[15:8]>
<Address[7:0]>
<Write data byte 0>
....
<Write data byte n> [stop]

4.1.6 Host Command

When sending a command, the host transmits a 3 byte command. Table 4-3 lists all the host command functions.

Note: ACTIVE command is generated by dummy memory read from address 0 when FT801 is in sleep or standby mode.

For SPI command transaction, the host sends a '0' bit and '1' bit, followed by the 6-bit command code. This is followed by 2 bytes 00h.

7	6	5	4	3	2	1	0
0	1	Command [5:0]					
0	0	0	0	0	0	0	0
0	0	0	0	0	0	0	0

Table 4-3 Host command transaction (SPI)

For I²C command transaction, bytes are packed in the I²C protocol as follows:

Copyright © Bridgetek Pte Ltd

chanhvinh.com

[start] <DEVICE ADDRESS + write bit>
<01b,Command[5:0]>
<00h>
<00h> [stop]

1st Byte	2nd byte	3rd byte	Command	Description
Power Modes				
00000000b	00000000b	00000000b	00h ACTIVE	Switch from Standby/Sleep modes to active mode. Dummy read from address 0 generates ACTIVE command.
01000001b	00000000b	00000000b	41h STANDBY	Put FT801 core to standby mode. Clock gate off, PLL and Oscillator remain on (default).
01000010b	00000000b	00000000b	42h SLEEP	Put FT801 core to sleep mode. Clock gate off, PLL and Oscillator off.
01010000b	00000000b	00000000b	50h PWRDOWN	Switch off 1.2V internal regulator. Clock, PLL and Oscillator off.
Clock Switching				
01000100b	00000000b	00000000b	44h CLKEXT	Select PLL input from Crystal oscillator or external input clock.
01001000b	00000000b	00000000b	48h CLKINT	Select PLL input from Internal relaxation oscillator (default).
01100010b	00000000b	00000000b	62h CLK48M	Switch PLL output clock to 48MHz (default).
01100001b	00000000b	00000000b	61h CLK36M	Switch PLL output clock to 36MHz.
Miscellaneous				
01101000b	00000000b	00000000b	68h CORERST	Send reset pulse to FT801 core. All registers and state machines will be reset.

Table 4-4 Host Command Table

Note: Any command code not specified is reserved and should not be used by the software

4.1.7 Interrupts

The interrupt output pin is enabled by REG_INT_EN. When REG_INT_EN is 0, INT_N is tri-state (pulled to high by external pull-up resistor). When REG_INT_EN is 1, INT_N is driven low when any of the interrupt flags in REG_INT_FLAGS are high, after masking with REG_INT_MASK. Writing a '1' in any bit of REG_INT_MASK will enable the correspond interrupt. Each bit in REG_INT_FLAGS is set by a corresponding interrupt source. REG_INT_FLAGS is readable by the host at any time and clears when read.

Bit	7	6	5	4
Interrupt Sources	CONVCOMPLETE	CMDFLAG	CMDEMPTY	PLAYBACK
Conditions	Touch-screen conversions completed	Command FIFO flag	Command FIFO empty	Audio playback ended
Bit	3	2	1	0
Interrupt Sources	SOUND	TAG	Reserved	SWAP
Conditions	Sound effect ended	Touch-screen tag value change	-	Display list swap occurred

Table 4-5 Interrupt Flags bit assignment

Copyright © Bridgetek Pte Ltd

chanhvinh.com

4.2 System Clock

4.2.1 Clock Source

The FT801 can be configured to use any of the three clock sources for system clock:

- Internal relaxation oscillator clock
- External 12MHz crystal
- External 12MHz square wave clock

Figure 4-4, Figure 4-5 and Figure 4-6 shows the pin connections for these clock options.

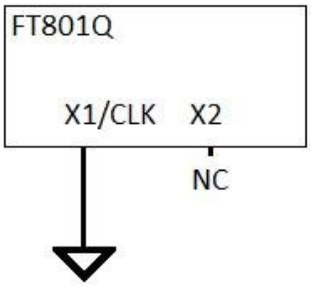

Figure 4-4 Internal relaxation oscillator connection

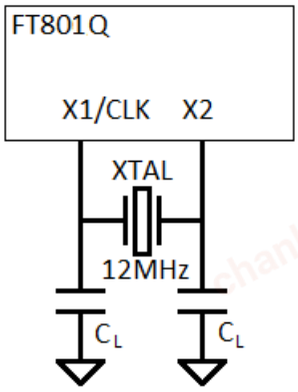

Figure 4-5 Crystal oscillator connection

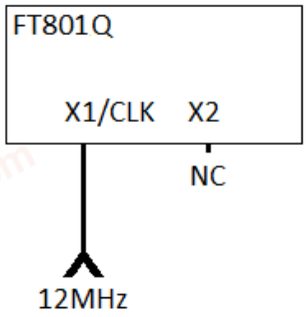

Figure 4-6 External clock input

4.2.2 Phase Locked Loop

The internal PLL takes input clock from the oscillator, and generates clocks to all internal circuits, including graphics engine, audio engine and touch engine.

Copyright © Bridgetek Pte Ltd

chanhvinh.com

4.2.3 Clock Enable

Upon power-on the FT801 enters standby mode. The internal relaxation oscillator is selected for the PLL clock source. The system clock will be enabled when following step is executed:

- Host sends an "ACTIVE" command (dummy read at address 0)

If the application choose to use the external clock source (12MHz crystal or clock), the following steps shall be executed:

- Host sends an "ACTIVE" command (dummy read at address 0)
- Host sends an "CLKEXT" command
- Host writes to REG_PCLK with non-zero value (i.e. 5)

If SPI is used as host interface, the SPI clock shall not exceed 11MHz before system clock is enabled. After system clock is properly enabled, the SPI clock is allowed to go up to 30MHz.

4.2.4 Clock Frequency

Upon power-on the internal relaxation oscillator is untrimmed. The frequency range could be quite wide from chip to chip (refer to table x-y for internal relaxation oscillator specifications). If the application utilises the internal clock without external clock source, it is recommended to perform clock trimming by software for better performance. For the details of clock trimming mechanism please refer to application note AN_299 FT800 FT801 Internal Clock Trimming.

By default, the system clock is 48MHz when the input clock is 12MHz. Host is allowed to switch the system clock between 48MHz and 36MHz by the host command "CLK48MHz" and "CLK36MHz" respectively. The clock switching is synchronised to VSYNC edge on the fly. This is to avoid possible graphics glitch during clock switching. As a result, the clock switch will only take effect if the REG_PCLK is a non-zero value.

4.3 Graphics Engine

4.3.1 Introduction

The graphics engine executes the display list once for every horizontal line. It executes the primitive objects in the display list and constructs the display line buffer. The horizontal pixel content in the line buffer is updated if the object is visible at the horizontal line.

Main features of the graphics engine are:

- The primitive objects supported by the graphics processor are: lines, points, rectangles, bitmaps (comprehensive set of formats), text display, plotting bar graph, edge strips, and line strips, etc.
- Operations such as stencil test, alpha blending and masking are useful for creating a rich set of effects such as shadows, transitions, reveals, fades and wipes.
- Anti-aliasing of the primitive objects (except bitmaps) gives a smoothing effect to the viewer.
- Bitmap transformations enable operations such as translate, scale and rotate.
- Display pixels are plotted with 1/16th pixel precision.
- Four levels of graphics states
- Tag buffer detection

The graphics engine also supports customized build-in widgets and functionalities such as jpeg decode, screen saver, calibration etc. The graphics engine interprets commands from the MPU host via a 4 Kbyte FIFO in FT801 memory at RAM_CMD. The MPU/MCU writes commands into the FIFO, and the graphics engine reads and executes the commands. The MPU/MCU updates register REG_CMD_WRITE to indicate that there are new commands in the FIFO, and the graphics engine updates REG_CMD_READ after commands have been executed.

Main features supported are:

Copyright © Bridgetek Pte Ltd

chanhvinh.com

- Drawing of widgets such as buttons, clock, keys, gauges, text displays, progress bars, sliders, toggle switches, dials, gradients, etc.
- JPEG decode (Only baseline is supported)
- Inflate functionality (zlib inflate is supported)
- Timed interrupt (generate an interrupt to host processor after a specified number of milliseconds)
- In built animated functionalities such as displaying logo, calibration, spinner, screen saver and sketch
- Snapshot feature to capture the current graphics display

For a complete list of graphics engine display commands and widgets refer to FT800 Series Programmers Guide - Chapter 4.

4.3.2 ROM and RAM Fonts

The FT801 has built in ROM character bitmaps as font metrics. The graphics engine can use these metrics when drawing text fonts. There is total 16 ROM fonts, numbered with font handle 16-31. The user can define and load customized font metrics into RAM_G, which can be used by display command with handle 0-15.

Each font metric block has a 148 byte font table which defines the parameters of the font and the pointer of font image. The font table format is shown in Table 4-6.

Address Offset	Size(byte)	Parameter Description
0	128	width of each font character, in pixels
128	4	font bitmap format, for example L1, L4 or L8
132	4	font line stride, in bytes
136	4	font width, in pixels
140	4	font height, in pixels
144	4	pointer to font image data in memory

Table 4-6 Font table format

The ROM fonts are stored in the memory space ROM_FONT. The ROM font table is also stored in the ROM. The starting address of ROM font table for font index 16 is stored at ROM_FONT_ADDR, with other font tables follow. The ROM font table and individual character width (in pixel) are listed in Table 4-7 through Table 4-9. Font index 16, 18 and 20-31 are for basic ASCII characters (code 0-127), while font index 17 and 19 are for Extended ASCII characters (code 128-255). The character width for font index 17 or 19 is fixed at 8 pixels for any of the Extended ASCII characters.

Font Index	16	17	18	19	20	21	22	23	24	25	26	27	28	29	30	31
Font format	L1	L1	L1	L1	L1	L1	L1	L1	L1	L1	L4	L4	L4	L4	L4	L4
Line stride	1	1	1	1	2	2	2	3	3	4	6	8	9	11	14	18
Font width	8	8	8	8	10	13	14	17	24	30	12	16	18	22	28	36
Font height	8	8	16	16	13	17	20	22	29	38	16	20	25	28	36	49
Image pointer start address (hex)	FFBFC	FF7FC	FEFFC	FE7FC	FDAFC	FCD3C	FBD7C	FA17C	F7E3C	F3D1C	F201C	EDC1C	E7F9C	E01BC	D2C3C	BB23C

Table 4-7 ROM font table

Font Index =>		16	18	20	21	22	23	24	25	26	27	28	29	30	31
ASCII Character width in pixels	0 NULL	-	-	-	-	-	-	-	-	-	-	-	-	-	-
	1 SOH	-	-	-	-	-	-	-	-	-	-	-	-	-	-
	2 STX	-	-	-	-	-	-	-	-	-	-	-	-	-	-
	3 ETX	-	-	-	-	-	-	-	-	-	-	-	-	-	-
	4 EOT	-	-	-	-	-	-	-	-	-	-	-	-	-	-
	5 ENQ	-	-	-	-	-	-	-	-	-	-	-	-	-	-
	6 ACK	-	-	-	-	-	-	-	-	-	-	-	-	-	-
	7 BEL	-	-	-	-	-	-	-	-	-	-	-	-	-	-

Copyright © Bridgetek Pte Ltd

chanhvinh.com

Font Index =>		16	18	20	21	22	23	24	25	26	27	28	29	30	31
8	BS	-	-	-	-	-	-	-	-	-	-	-	-	-	-
9	HT	-	-	-	-	-	-	-	-	-	-	-	-	-	-
10	LF	-	-	-	-	-	-	-	-	-	-	-	-	-	-
11	VT	-	-	-	-	-	-	-	-	-	-	-	-	-	-
12	FF	-	-	-	-	-	-	-	-	-	-	-	-	-	-
13	CR	-	-	-	-	-	-	-	-	-	-	-	-	-	-
14	SO	-	-	-	-	-	-	-	-	-	-	-	-	-	-
15	SI	-	-	-	-	-	-	-	-	-	-	-	-	-	-
16	DLE	-	-	-	-	-	-	-	-	-	-	-	-	-	-
17	DC1	-	-	-	-	-	-	-	-	-	-	-	-	-	-
18	DC2	-	-	-	-	-	-	-	-	-	-	-	-	-	-
19	DC3	-	-	-	-	-	-	-	-	-	-	-	-	-	-
20	DC4	-	-	-	-	-	-	-	-	-	-	-	-	-	-
21	NAK	-	-	-	-	-	-	-	-	-	-	-	-	-	-
22	SYN	-	-	-	-	-	-	-	-	-	-	-	-	-	-
23	ETB	-	-	-	-	-	-	-	-	-	-	-	-	-	-
24	CAN	-	-	-	-	-	-	-	-	-	-	-	-	-	-
25	EM	-	-	-	-	-	-	-	-	-	-	-	-	-	-
26	SUB	-	-	-	-	-	-	-	-	-	-	-	-	-	-
27	ESC	-	-	-	-	-	-	-	-	-	-	-	-	-	-
28	FS	-	-	-	-	-	-	-	-	-	-	-	-	-	-
29	GS	-	-	-	-	-	-	-	-	-	-	-	-	-	-
30	RS	-	-	-	-	-	-	-	-	-	-	-	-	-	-
31	US	-	-	-	-	-	-	-	-	-	-	-	-	-	-
32	space	8	8	3	4	5	5	6	9	3	4	5	6	8	10
33	!	8	8	3	4	5	6	6	9	4	4	6	6	8	11
34	"	8	8	4	5	6	5	8	12	5	6	8	9	11	15
35	#	8	8	6	8	9	10	14	19	9	11	13	15	19	26
36	$	8	8	6	8	9	10	13	18	8	10	12	14	18	24
37	%	8	8	9	12	14	16	22	29	10	12	15	18	23	31
38	&	8	8	8	10	11	13	17	22	9	11	13	15	19	26
39	'	8	8	2	3	3	3	6	6	3	4	5	5	7	9
40	(	8	8	4	5	6	6	8	11	5	6	7	8	11	14
41	)	8	8	4	5	6	6	8	11	5	6	7	8	10	14
42	*	8	8	4	7	6	7	10	13	6	7	9	10	13	18
43	+	8	8	6	9	10	10	14	19	8	10	12	14	18	24
44	,	8	8	3	3	4	5	6	9	3	4	5	5	7	9
45	-	8	8	4	4	5	6	8	11	6	8	9	11	14	19
46	.	8	8	3	3	4	5	6	9	4	5	6	6	8	11
47	/	8	8	3	4	5	5	7	9	6	7	9	10	13	17
48	0	8	8	6	8	9	10	13	18	8	10	12	14	17	24
49	1	8	8	6	8	9	10	13	18	8	10	12	14	17	24
50	2	8	8	6	8	9	10	13	18	8	10	12	14	17	24
51	3	8	8	6	8	9	10	13	18	8	10	12	14	17	24
52	4	8	8	6	8	9	10	13	18	8	10	12	14	17	24
53	5	8	8	6	8	9	10	13	18	8	10	12	14	17	24
54	6	8	8	6	8	9	10	13	18	8	10	12	14	17	24
55	7	8	8	6	8	9	10	13	18	8	10	12	14	17	24
56	8	8	8	6	8	9	10	13	18	8	10	12	14	17	24
57	9	8	8	6	8	9	10	13	18	8	10	12	14	17	24
58	:	8	8	3	3	4	5	6	9	4	4	5	6	8	11
59	;	8	8	3	4	4	5	6	9	4	4	5	6	8	11
60	<	8	8	6	8	10	10	15	19	7	9	11	12	16	21
61	=	8	8	5	9	10	11	15	19	8	10	12	14	17	24

Copyright © Bridgetek Pte Ltd

chanhvinh.com

Font Index =>		16	18	20	21	22	23	24	25	26	27	28	29	30	31
62	>	8	8	6	8	10	10	15	19	7	9	11	13	16	22
63	?	8	8	6	8	9	10	12	18	7	8	10	11	15	20
64	@	8	8	11	13	17	18	25	34	13	15	19	21	28	38
65	A	8	8	7	9	11	13	17	22	9	11	13	15	20	27
66	B	8	8	7	9	11	13	17	22	9	11	13	15	20	27
67	C	8	8	8	10	12	14	18	24	9	11	13	15	20	27
68	D	8	8	8	10	12	14	18	24	9	12	14	16	21	28
69	E	8	8	7	9	11	13	16	22	8	9	12	13	17	23
70	F	8	8	6	8	10	12	14	20	8	9	12	13	17	23
71	G	8	8	8	11	13	15	19	25	9	12	14	16	21	28
72	H	8	8	8	10	12	14	18	24	10	12	15	17	22	30
73	I	8	8	3	4	4	6	8	9	4	5	6	7	9	12
74	J	8	8	5	7	8	10	13	16	8	9	12	13	17	23
75	K	8	8	7	9	11	13	18	22	9	11	14	15	20	27
76	L	8	8	6	8	9	11	14	18	8	9	12	13	17	23
77	M	8	8	9	12	13	16	21	27	12	15	18	21	27	36
78	N	8	8	8	10	12	14	18	24	10	12	15	17	22	30
79	O	8	8	8	11	13	15	18	25	10	12	14	16	21	29
80	P	8	8	7	9	11	13	16	22	9	11	13	15	20	27
81	Q	8	8	8	11	13	15	18	26	10	12	15	17	22	29
82	R	8	8	7	10	12	14	17	24	9	11	13	15	20	27
83	S	8	8	7	9	11	13	16	22	9	10	13	15	19	26
84	T	8	8	5	9	10	12	16	20	9	10	13	14	19	25
85	U	8	8	8	10	12	14	18	24	9	12	14	16	21	28
86	V	8	8	7	9	11	13	17	22	12	11	14	15	20	27
87	W	8	8	9	13	15	18	22	31	9	15	18	21	27	36
88	X	8	8	7	9	11	13	17	22	9	11	13	15	20	27
89	Y	8	8	7	9	11	13	16	22	8	11	13	15	20	27
90	Z	8	8	7	9	10	12	15	20	4	10	13	14	19	25
91	[	8	8	3	4	5	5	7	9	6	5	6	7	8	11
92	\	8	8	3	4	5	5	7	9	4	7	9	10	13	18
93	]	8	8	3	4	5	5	7	9	6	5	6	6	8	11
94	^	8	8	6	7	8	9	12	16	7	7	9	10	13	18
95	_	8	8	6	8	9	11	14	18	4	8	10	11	15	20
96	`	8	8	3	5	6	4	7	11	8	5	7	8	10	13
97	a	8	8	5	8	9	11	13	18	8	9	12	13	17	23
98	b	8	8	6	7	9	11	14	18	7	10	12	14	18	24
99	c	8	8	5	7	8	10	12	16	8	9	11	13	16	22
100	d	8	8	6	8	9	11	14	18	7	10	12	14	18	24
101	e	8	8	5	8	9	10	13	18	5	9	11	13	16	22
102	f	8	8	4	4	5	6	8	9	8	6	8	9	11	15
103	g	8	8	6	8	9	11	14	18	8	10	12	14	18	24
104	h	8	8	6	8	9	10	13	18	4	10	12	14	18	24
105	i	8	8	2	3	3	4	6	7	4	4	5	6	8	11
106	j	8	8	2	3	4	4	6	7	8	4	5	6	8	11
107	k	8	8	5	7	8	9	12	16	4	9	11	13	16	22
108	l	8	8	2	3	3	4	6	7	12	4	5	6	8	11
109	m	8	8	8	11	14	16	20	27	8	15	18	21	27	37
110	n	8	8	6	8	9	10	14	18	8	10	12	14	18	24
111	o	8	8	6	8	9	11	13	18	8	10	12	14	18	24
112	p	8	8	6	8	9	11	14	18	8	10	12	14	18	24
113	q	8	8	6	8	9	11	14	18	5	10	12	14	18	24
114	r	8	8	4	5	5	6	9	11	7	6	7	8	11	15
115	s	8	8	5	7	8	9	12	16	5	9	11	13	16	22

Copyright © Bridgetek Pte Ltd

chanhvinh.com

Font Index =>			16	18	20	21	22	23	24	25	26	27	28	29	30	31
	116	t	8	8	4	4	5	6	8	9	8	6	7	8	10	13
	117	u	8	8	5	7	9	10	14	18	7	10	12	14	18	24
	118	v	8	8	6	7	8	10	13	16	11	9	11	12	16	21
	119	w	8	8	8	10	12	14	18	23	7	13	16	18	23	32
	120	x	8	8	6	7	8	10	12	16	7	9	11	12	16	21
	121	y	8	8	5	7	8	10	13	16	7	9	11	12	16	21
	122	z	8	8	5	7	8	9	12	16	5	9	11	12	16	21
	123	{	8	8	3	5	6	6	8	11	3	6	7	8	11	14
	124	|	8	8	3	3	4	5	6	9	5	4	5	6	8	10
	125	}	8	8	3	5	6	6	8	11	10	6	7	8	11	14
	126	~	8	8	7	8	10	10	14	19	3	12	14	16	21	29
	127	DEL	8	8	0	0	0	0	0	0	2	4	5	6	8	10

Table 4-8 ROM font ASCII character width in pixels

Decimal	Symbol	Decimal	Symbol	Decimal	Symbol	Decimal	Symbol	Decimal	Symbol	Decimal	Symbol	Decimal	Symbol	Decimal	Symbol
128	Ç	144	É	160	á	176	░	192	└	208	ð	224	Ó	240	-
129	ü	145	æ	161	í	177	▒	193	┴	209	Ð	225	ß	241	±
130	é	146	Æ	162	ó	178	▓	194	┬	210	Ê	226	Ô	242	‗
131	â	147	ô	163	ú	179	|	195	├	211	Ë	227	Ò	243	¾
132	ä	148	ö	164	ñ	180	┤	196	–	212	È	228	õ	244	¶
133	à	149	ò	165	Ñ	181	Á	197	┼	213	ı	229	Õ	245	§
134	å	150	û	166	ª	182	Â	198	ã	214	Í	230	µ	246	÷
135	ç	151	ù	167	º	183	À	199	Ã	215	Î	231	þ	247	¸
136	ê	152	ÿ	168	¿	184	©	200	╚	216	Ï	232	Þ	248	°
137	ë	153	Ö	169	®	185	╣	201	╔	217	┘	233	Ú	249	¨
138	è	154	Ü	170	¬	186	║	202	╩	218	┌	234	Û	250	·
139	ï	155	ø	171	½	187	╗	203	╦	219	█	235	Ù	251	¹
140	î	156	£	172	¼	188	╝	204	╠	220	▄	236	ý	252	³
141	ì	157	Ø	173	¡	189	¢	205	═	221	¦	237	Ý	253	²
142	Ä	158	×	174	«	190	¥	206	╬	222	Ì	238	¯	254	■
143	Å	159	ƒ	175	»	191	┐	207	¤	223	▀	239	´	255	nbsp

Table 4-9 ROM font Extended ASCII characters

Note 1: Font 17 and 19 are extended ASCII characters, with width fixed at 8 pixels for all characters.

Note 2: All fonts included in the FT801 ROM are widely available to the market-place for general usage; see section nine for specific copyright data and links to the corresponding license agreements.

4.4 Parallel RGB Interface

The RGB parallel interface consists of 23 signals - DISP, PCLK, VSYNC, HSYNC, DE, 6 signals each for R, G and B.

Several registers configure the LCD operation of these signals as follow:

REG_PCLK is the PCLK divisor the default is 0 and disables the PCLK output.

PCLK frequency = System Clock frequency / REG_PCLK

PCLK_POL define the clock polarity, =0 for positive active clock edge, and 1 for negative clock edge.

Copyright © Bridgetek Pte Ltd

chanhvinh.com

REG_CSPREAD controls the transition of RGB signals with respect to PCLK active clock edge. When REG_CSPREAD=0, R[7:2],G[7:2] and B[7:2] signals change following the active edge of PCLK. When REG_CSPREAD=1, R[7:2] changes a PCLK clock early and B[7:2] a PCLK clock later, which helps reduce the switching noise.

REG_DITHER enables colour dither; the default is enabled. This option improves the half-tone appearance on displays. Internally, the graphics engine computes the colour values at an 8 bit precision; however, the LCD colour at a lower precision is sufficient. The FT801 output is only 6 bits per colour in 6:6:6 formats and a 2X2 dither matrix allow the truncated bits to contribute to the final colour values.

REG_OUTBITS gives the bit width of each colour channel, the default is 6, 6, 6 bits for each RGB colour. A lower value means fewer bits are output for each channel allowing dithering on lower precision LCD displays.

REG_SWIZZLE controls the arrangement of the output colour pins, to help the PCB route different LCD panel arrangements. Bit 0 of the register causes the order of bits in each colour channel to be reversed. Bits 1-3 control the RGB order. Setting Bit 1 causes R and B channels to be swapped. Setting Bit 3 allows rotation to be enabled. If Bit 3 is set, then (R,G,B) is rotated right if bit 2 is one, or left if bit 2 is zero.

REG_SWIZZLE				PINS			
b3	b2	b1	b0	R7, R6, R5, R4, R3, R2	G7, G6, G5, G4, G3, G2	B7, B6, B5, B4, B3, B2	
0	X	0	0	R[7:2]	G[7:2]	B[7:2]	Power on Default
0	X	0	1	R[2:7]	G[2:7]	B[2:7]	
0	X	1	0	B[7:2]	G[7:2]	R[7:2]	
0	X	1	1	B[2:7]	G[2:7]	R[2:7]	
1	0	0	0	G[7:2]	B[7:2]	R[7:2]	
1	0	0	1	G[2:7]	B[2:7]	R[2:7]	
1	0	1	0	G[7:2]	R[7:2]	B[7:2]	
1	0	1	1	G[2:7]	R[2:7]	B[2:7]	
1	1	0	0	B[7:2]	R[7:2]	G[7:2]	
1	1	0	1	B[2:7]	R[2:7]	G[2:7]	
1	1	1	0	R[7:2]	B[7:2]	G[7:2]	
1	1	1	1	R[2:7]	B[2:7]	G[2:7]	

Table 4-10 REG_SWIZZLE RGB Pins Mapping

4.5 Miscellaneous Control

4.5.1 Backlight Control Pin

The backlight control pin is a pulse width modulated (PWM) signal controlled by two registers: *REG_PWM_HZ* and *REG_PWM_DUTY*. REG_PWM_HZ specifies the PWM output frequency, the range is 250-10000 Hz. REG_PWM_DUTY specifies the duty cycle; the range is 0-128. A value of 0 means that the PWM is completely off and 128 means completely on.

4.5.2 DISP Control Pin

The DISP pin is a general purpose output that can be used to enable or as a reset control to LCD display panel. The pin is controlled by writing to Bit 7 of REG_GPIO register.

4.5.3 General Purpose IO pins

The GPIO1 and GPIO0 pins are default inputs. Write '1' to Bit 1 and 0 of REG_GPIO_DIR to change to output pins respectively. In I²C mode the GPIO0 is used as SA2 and is not available as GPIO.

GPIO1 and GPIO0 are read from or write to bit 1 and 0 of REG_GPIO register. GPIO1 is recommended to be used as shutdown control for audio power amplifier.

4.5.4 Pins Drive Current Control

Copyright © Bridgetek Pte Ltd

chanhvinh.com

The output drive current of output pins can be changed as per the following table by writing to bit[6:2] of REG_GPIO register:

REG_GPIO	Bit[6:5]				Bit[4]		Bit[3:2]			
Value	00b#	01b	10b	11b	0b#	1b	00b#	01b	10b	11b
Drive Current	4mA	8mA	12mA	16mA	4mA	8mA	4mA	8mA	12mA	16mA
Pins	GPIO1 GPIO0				PCLK DISP VSYNC HSYNC DE R7..R2 G7..G2 B7..B2 BACKLIGHT		MISO INT_N			

Table 4-11 Output drive current selection

Note: #Default value

4.6 Audio Engine

FT801 provides mono audio output through a PWM output pin, AUDIO_L. It outputs the two audio sources, the sound synthesizer and audio file playback.

4.6.1 Sound Synthesizer

A sound processor, AUDIO ENGINE, generates the sound effects from a small ROM library of waves table. To play a sound effect listed in Table 4.3, load the REG_SOUND register with a code value and write 1 to the REG_PLAY register. The REG_PLAY register reads 1 while the effect is playing and returns a '0' when the effects end. Some sound effects play continuously until it is interrupted or commanded to play the next sound effect. To interrupt an effect, write a new value to REG_SOUND and REG_PLAY registers; e.g. write 0 (Silence) to REG_SOUND and 1 to PEG_PLAY to stop the sound effect.

The sound volume is controlled by register REG_VOL_SOUND. The 16-bit REG_SOUND register takes an 8-bit sound in the low byte. For some sounds, marked "pitch adjust" in the table below, the high 8 bits contain a MIDI note value. For these sounds, note value of zero indicates middle C. For other sounds the high byte of REG_SOUND is ignored.

Value	Effect	Continuous	Pitch adjust
00h	Silence	Y	N
01h	square wave	Y	Y
02h	sine wave	Y	Y
03h	sawtooth wave	Y	Y
04h	triangle wave	Y	Y
05h	Beeping	Y	Y
06h	Alarm	Y	Y
07h	Warble	Y	Y
08h	Carousel	Y	Y
10h	1 short pip	N	Y
11h	2 short pips	N	Y
12h	3 short pips	N	Y
13h	4 short pips	N	Y
14h	5 short pips	N	Y
15h	6 short pips	N	Y

Value	Effect	Continuous	Pitch adjust
32h	DTMF 2	Y	N
33h	DTMF 3	Y	N
34h	DTMF 4	Y	N
35h	DTMF 5	Y	N
36h	DTMF 6	Y	N
37h	DTMF 7	Y	N
38h	DTMF 8	Y	N
39h	DTMF 9	Y	N
40h	harp	N	Y
41h	xylophone	N	Y
42h	tuba	N	Y
43h	glockenspiel	N	Y
44h	organ	N	Y
45h	trumpet	N	Y
46h	piano	N	Y

Copyright © Bridgetek Pte Ltd

chanhvinh.com

16h	7 short pips	N	Y	47h	chimes	N	Y
17h	8 short pips	N	Y	48h	music box	N	Y
18h	9 short pips	N	Y	49h	bell	N	Y
19h	10 short pips	N	Y	50h	click	N	N
1Ah	11 short pips	N	Y	51h	switch	N	N
1Bh	12 short pips	N	Y	52h	cowbell	N	N
1Ch	13 short pips	N	Y	53h	notch	N	N
1Dh	14 short pips	N	Y	54h	hihat	N	N
1Eh	15 short pips	N	Y	55h	kickdrum	N	N
1Fh	16 short pips	N	Y	56h	pop	N	N
23h	DTMF #	Y	N	57h	clack	N	N
2Ch	DTMF *	Y	N	58h	chack	N	N
30h	DTMF 0	Y	N	60h	mute	N	N
31h	DTMF 1	Y	N	61h	unmute	N	N

Table 4-12 Sound Effect

MIDI note	ANSI note	Freq (Hz)
21	A0	27.5
22	A#0	29.1
23	B0	30.9
24	C1	32.7
25	C#1	34.6
26	D1	36.7
27	D#1	38.9
28	E1	41.2
29	F1	43.7
30	F#1	46.2
31	G1	49.0
32	G#1	51.9
33	A1	55.0
34	A#1	58.3
35	B1	61.7
36	C2	65.4
37	C#2	69.3
38	D2	73.4
39	D#2	77.8
40	E2	82.4
41	F2	87.3
42	F#2	92.5
43	G2	98.0
44	G#2	103.8
45	A2	110.0
46	A#2	116.5
47	B2	123.5
48	C3	130.8
49	C#3	138.6
50	D3	146.8
51	D#3	155.6
52	E3	164.8
53	F3	174.6

MIDI note	ANSI note	Freq (Hz)
65	F4	349.2
66	F#4	370.0
67	G4	392.0
68	G#4	415.3
69	A4	440.0
70	A#4	466.2
71	B4	493.9
72	C5	523.3
73	C#5	554.4
74	D5	587.3
75	D#5	622.3
76	E5	659.3
77	F5	698.5
78	F#5	740.0
79	G5	784.0
80	G#5	830.6
81	A5	880.0
82	A#5	932.3
83	B5	987.8
84	C6	1046.5
85	C#6	1108.7
86	D6	1174.7
87	D#6	1244.5
88	E6	1318.5
89	F6	1396.9
90	F#6	1480.0
91	G6	1568.0
92	G#6	1661.2
93	A6	1760.0
94	A#6	1864.7
95	B6	1975.5
96	C7	2093.0
97	C#7	2217.5

Copyright © Bridgetek Pte Ltd

chanhvinh.com

54	F#3	185.0	98	D7	2349.3
55	G3	196.0	99	D#7	2489.0
56	G#3	207.7	100	E7	2637.0
57	A3	220.0	101	F7	2793.8
58	A#3	233.1	102	F#7	2960.0
59	B3	246.9	103	G7	3136.0
60	C4	261.6	104	G#7	3322.4
61	C#4	277.2	105	A7	3520.0
62	D4	293.7	106	A#7	3729.3
63	D#4	311.1	107	B7	3951.1
64	E4	329.6	108	C8	4186.0

Table 4-13 MIDI Note Effect

4.6.2 Audio Playback

The FT801 can play back recorded sound through its audio output. To do this, load the original sound data into the FT801's RAM, and set registers to start the playback.

The registers controlling audio playback are:

REG_PLAYBACK_START: the start address of the audio data
REG_PLAYBACK_LENGTH: the length of the audio data, in bytes
REG_PLAYBACK_FREQ: the playback sampling frequency, in Hz
REG_PLAYBACK_FORMAT: the playback format, one of LINEAR SAMPLES, uLAW SAMPLES, or ADPCM SAMPLES
REG_PLAYBACK_LOOP: if zero, sample is played once. If one, sample is repeated indefinitely
REG_PLAYBACK_PLAY: a write to this location triggers the start of audio playback, regardless of writing '0' or '1'. Read back '1' when playback is ongoing, and '0' when playback finishes
REG_VOL_PB: playback volume, 0-255

The mono audio format supported is 8-bits PCM, 8-bits uLAW and 4-bits IMA-ADPCM. For ADPCM_SAMPLES, each sample is 4 bits, so two samples are packed per byte, first sample is in bits 0-3 and the second is in bits 4-7.

The current audio playback read pointer can be queried by reading the REG_PLAYBACK_READPTR. Using a large sample buffer, looping, and this read pointer, the host MPU/MCU can supply a continuous stream of audio.

Copyright © Bridgetek Pte Ltd

chanhvinh.com

4.7 Touch-Screen Engine

The Capacitive Touch Screen Engine (CTSE) of FT801 communicates with external capacitive touch panel module (CTPM) through I^2C interface. The CTPM will assert its interrupt line when there is a touch detected. Upon detecting CTP_INT_N line active, the FT801 will read the touch data through I^2C. Up to 5 touches can be reported and stored in FT801 registers. FT801 currently supports CTPM with FT5x06 or IQS5xx drive chip.

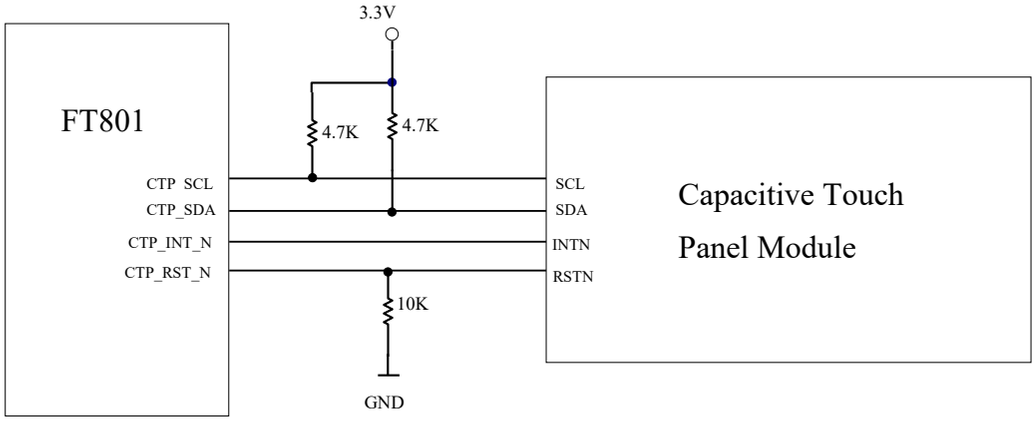

Figure 4-7 Touch screen connection

The host controls the CTSE operation mode by writing the REG_CTOUCH_MODE.

REG_CTOUCH_MODE	Mode	Description
0	OFF	Acquisition stopped
1	ONE-SHOT	Perform acquisition once every time MPU write '1' to REG_CTOUCH_MODE.
2	Reserved	Reserved
3	CONTINUOUS	Perform acquisition continuously at the reporting rate of the connected CTPM.

Table 4-14 Touch Controller Operating Mode

The FT801 CTSE supports compatibility mode and extended mode. By default, the CTSE runs in compatibility mode where the touch system provides an interface very similar to the FT800's. In this mode the same application code can run on FT800 and FT801 without alteration. In extended mode, the touch register meanings are modified, and a second set of registers are exposed. These allow multi-touch detection.

4.7.1 Compatibility mode

The CTSE reads the X and Y coordinates from CTPM and writes to register REG_CTOUCH_RAW_XY. If the touch screen is not being pressed, both registers read 65535 (FFFFh).

These touch values are transformed into screen coordinates using the matrix in registers REG_CTOUCH_TRANSFORM_A-F. The post-transform coordinates are available in register REG_CTOUCH_SCREEN_XY. If the touch screen is not being pressed, both registers read -32768 (8000h). The values for REG_CTOUCH_TRANSFORM_A-F may be computed using an on-screen calibration process. If the screen is being touched, the screen coordinates are looked up in the screen's tag buffer, delivering a final 8-bit tag value, in REG_TOUCH_TAG. Because the tag lookup takes a full frame, and touch coordinates change continuously, the original (x; y) used for the tag lookup is also available in REG_TOUCH_TAG_XY.

Copyright © Bridgetek Pte Ltd

chanhvinh.com

4.7.2 Extended mode

Setting REG_CTOUCH_EXTENDED to 1b'0 enables extended mode. In extended mode a new set of readout registers are available, allowing gesture and up to five touches to be read. There are two classes of registers: control registers and status registers. Control registers are written by MCU. Status registers can be read out by MCU and the FT801's hardware tag system.

The five touch coordinates are packed in REG_CTOUCH_TOUCH0_XY, REG_CTOUCH_TOUCH1_XY, REG_CTOUCH_TOUCH2_XY, REG_CTOUCH_TOUCH3_XY, REG_CTOUCH4_X and REG_CTOUCH4_Y. Coordinates stored in these registers are signed 16-bit values, so have range -32768 to 32767. The no-touch condition is indicated by x=y= -32768. These coordinates are already transformed into screen coordinates based on the raw data read from CTPM, using the matrix in registers REG_CTOUCH_TRANSFORM_A-F. To obtain raw (x, y) coordinates read from CTPM, the user sets the REG_CTOUCH_TRANSFORM_A-F registers to the identity matrix.

The FT801 tag mechanism is implemented by hardware, and can only query a single (x, y) location. REG_TOUCH_TAG always reports the first touch, that is, the (x, y) from REG_CTOUCH_TOUCH0_XY.

4.8 Power Management

4.8.1 Power supply

The FT801 may be operated with a single supply of 3.3V apply to VCC and VCCIO pins. For operation with host MPU/MCU at lower supply, connect the VCCIO to MPU power to match the interface power.

Symbol	Typical	Description
VCCIO	1.8V, or 2.5V, or 3.3V	Supply for Host interface digital I/O pad only, LCD RGB interface supply from VCC.
VCC	3.3V	Supply for chip

Table 4-15 Power supply

Copyright © Bridgetek Pte Ltd

chanhvinh.com

4.8.2 Internal Regulator and POR

The 1.2V internal regulator provides power to the core circuit. The regulator is disabled when device is in POWERDOWN state. Power down is activated either by the SCU command write or by holding down the PD_N pin for at least 5mS to allow the 1.2V decoupling capacitor to discharge fully. The regulator is enabled only by releasing the PD_N pin. A 47kΩ resistor is recommended to pull the PD_N pin up to VCCIO, together with a 100nF capacitor to ground in order to delay the 1.2V regulator powering up after the VCC and VCCIO are stable.

The 1.2V internal regulator requires a compensation capacitor to be stable. A typical design puts a 4.7uF capacitor with ESR >0.5Ω is required between VCC1V2 to GND pins. Do not connect any load to this pin. The 1.2V regulator will generate Power-On-Reset (POR) pulse when the output voltage rises above the POR threshold. The POR will reset all the core digital circuits.

It is possible to use PD_N pin as an asynchronous hardware reset input. Drive PD_N low for at least 5ms and then drive it high will reset the FT801 chip.

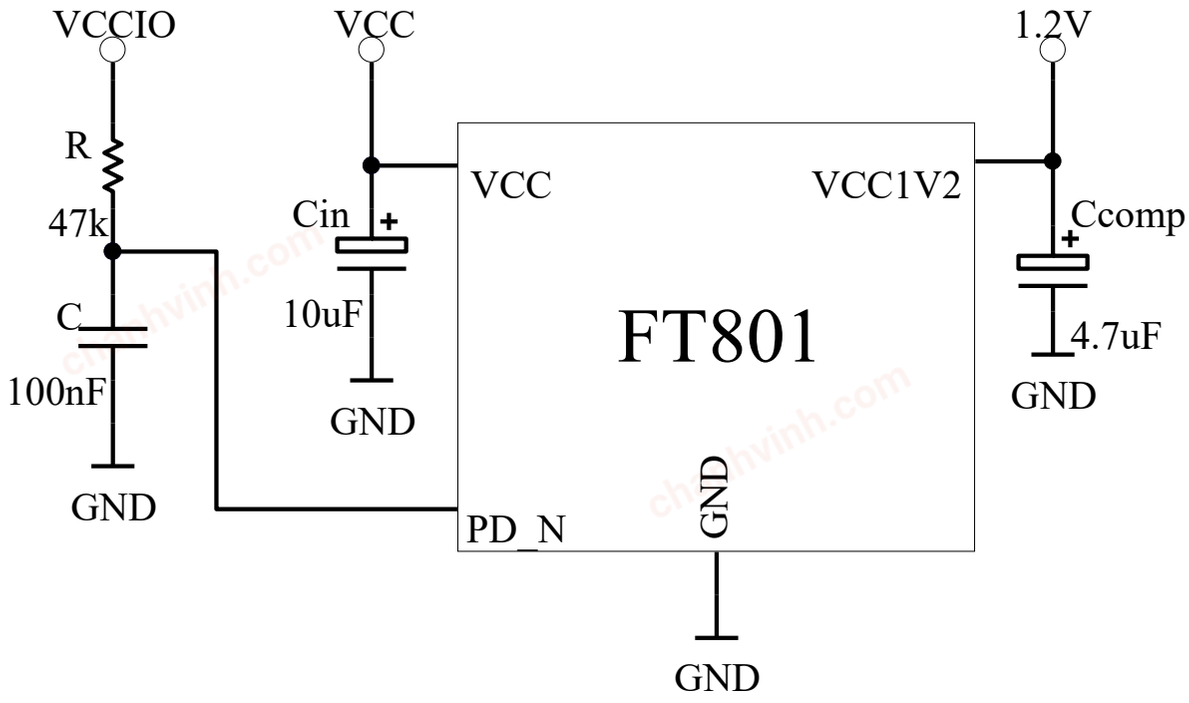

Figure 4-8 1.2V regulator

chanhvinh.com

4.8.3 Power Modes

When supply to VCCIO and VCC is applied, internal 1.2V regulator is powered by VCC. An internal POR pulse will be generated during the regulator power up until it is stable. After the initial power up, the FT801 will stay in STANDBY state. When needed, host can set FT801 to ACTIVE state by performing a dummy read to address 0. The graphics engine, the audio engine and the touch engine are only functional in ACTIVE state. To save power host can send command to put FT801 into any of the low power mode: STANDBY, SLEEP and POWERDOWN. In addition, host is allowed to put FT801 in POWERDOWN mode by drive PD_N pin to low, regardless of what current state it is in. Refer to Figure 4-9 for the power state transitions.

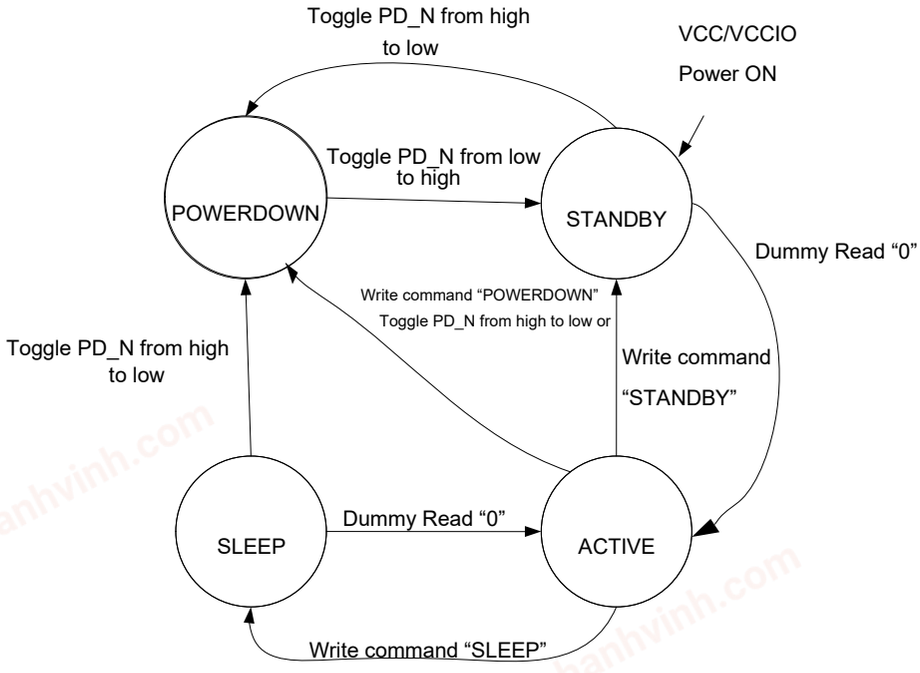

Figure 4-9 Power State Transition

4.8.3.1 ACTIVE state

In ACTIVE state, the FT801 is in normal operation. The crystal oscillator and PLL are functioning. The system clock applied to the FT801 core engines is enabled.

4.8.3.2 STANDBY state

In STANDBY state, the crystal oscillator and PLL remain functioning; the system clock applied to the FT801 core engines is disabled. All register contents are retained.

4.8.3.3 SLEEP state

In SLEEP state, the crystal oscillator, PLL and system clock applied to the FT801 core engines are disabled. All register contents are retained.

4.8.3.4 POWERDOWN state

In POWERDOWN state, the internal 1.2V regulator supplying the core digital logic, the crystal oscillator, the PLL and the system clock applied to the FT801 core is disabled. All register contents are lost and reset to default when the chip is next switched on.

Copyright © Bridgetek Pte Ltd

chanhvinh.com

4.8.3.5 Wake up to ACTIVE from other power states

Wake up from POWERDOWN state requires the host to pull the PD_N pin down and release, a low to high transition enables the 1.2V regulator. POR generated when 1.2V is stable and FT801 will switch to STANDBY mode after internal oscillator and PLL are up (maximum 20ms from PD_N rising edge). The clock enable sequence mentioned in section 4.2.3 shall be executed to proper enable the system clock.

From SLEEP state, host MPU reads at memory address 0 to wake the FT801 into ACTIVE state. Host needs to wait for at least 20ms before accessing any registers or commands. This is to guarantee the crystal oscillator and PLL are up and stable.

From STANDBY state, host MPU reads at memory address 0 to wake the FT801 into ACTIVE state. Host can immediately access any register or command.

4.8.3.6 Pin Status at Different Power States

The FT801 pin status depends on the power state of the chip. See the following table for more details. At power transition from ACTIVE to STANDBY or ACTIVE to SLEEP, all pins retains their previous status. The software needs to set AUDIO_L, BACKLIGHT and PCLK to a known state before issuing power transition commands.

Pin Name	Reset State (VCC / VCCIO ON)	Reset State (VCC / VCCIO ON) Default Output Drive Strength	Active/Stand by/Sleep state (VCC / VCCIO ON)	Power down state (VCC ON / VCC1.2 OFF)	Hybrid Mode (VCC OFF / VCCIO ON)
AUDIO_L	Tristate Output (hi-Z)	16mA	Output	Retain previous state	
SPI_SCLK/I2C_SCL	Input (floating)		Input		Input (floating)
MISO/I2C_SDA	Tristate Output (hi-Z)	4mA	Input/Output		Tristate Output (hi-Z)
MOSI/I2C_SA0	Input (floating)		Input		Input (floating)
CS_N/I2C_SA1	Input (floating)		Input		Input (floating)
GPIO0/I2C_SA2	Input (floating)		Input/Output		Tristate Output (hi-Z)
GPIO1	Tristate Output (hi-Z)	4mA	Input/Output		Tristate Output (hi-Z)
MODE	Input		Input		Input (floating)
INT_N	Open Drain Output (hi-Z)	4mA	Open Drain Output		Tristate Output (hi-Z)
PD_N	Input		Input		Input (floating)
X1/CLK	Input (floating)		Crystal Oscillator Input CLK Input		Note: If applicable, external clock on X1/CLK pin should be removed
X2	Output (hi-Z)		Crystal Oscillator Output		
CTP_RST_N	Tristate Output (hi-Z)		Output	Retain Previous State	
CTP_INT_N	Tristate Output (hi-Z)		Input	Retain Previous State	
CTP_SCL	Tristate Output (hi-Z)		Input/Output	Retain Previous State	
CTP_SDA	Tristate Output (hi-Z)		Input/Output	Retain Previous State	
BACKLIGHT	Output	4mA	Output	Retain Previous State	
DE	Output	4mA	Output	Output Low	
VSYNC	Output	4mA	Output	Output Low	
HSYNC	Output	4mA	Output	Output Low	
DISP	Output	4mA	Output	Output Low	

Copyright © Bridgetek Pte Ltd

chanhvinh.com

Pin Name	Reset State (VCC / VCCIO ON)	Reset State (VCC / VCCIO ON) Default Output Drive Strength	Active/Stand by/Sleep state (VCC / VCCIO ON)	Power down state (VCC ON / VCC1.2 OFF)	Hybrid Mode (VCC OFF / VCCIO ON)
PCLK	Output	4mA	Output	Output Low	
R(7:2), G(7:2), B(7:2)	Output	4mA	Output	Output Low	

Table 4-16 Pin Status

chanhvinh.com

chanhvinh.com

5 FT801 Memory Map

All memory and registers in the FT801 core are memory mapped in 22-bits address space with 2-bits SPI/I2C command prefix. Prefix 0'b00 for read and 0'b10 for write to the address space, 0'b01 reserved for Host Commands and 0'b11 undefined. The following are the memory space defined.

Start Address	End Address	Size	NAME	Description
00 0000h	03 FFFFh	256 kB	RAM_G	Main graphics RAM
0C 0000h	0C 0003h	4 B	ROM_CHIPID	FT801 chip identification and revision information: Byte [0:1] Chip ID: "0801" Byte [2:3] Version ID: "0100"
0B B23Ch	0F FFFBh	275 kB	ROM_FONT	Font table and bitmap
0F FFFCh	0F FFFFh	4 B	ROM_FONT_ADDR	Font table pointer address
10 0000h	10 1FFFh	8 kB	RAM_DL	Display List RAM
10 2000h	10 23FFh	1 kB	RAM_PAL	Palette RAM
10 2400h	10 257Fh	380 B	REG_*	Registers
10 8000 h	10 8FFFh	4 kB	RAM_CMD	Command buffer
1C 2000 h	1C 27FFh	2 kB	RAM_SCREENSHOT	Screenshot readout buffer

Table 5-1 FT801 Memory Map

Note 1: The addresses beyond this table are reserved and shall not be read or written unless otherwise specified.

Note 2: The ROM_CHIPID utilizes a part of shadow address from ROM_FONT address space.

5.1 FT801 Registers

Table 5.1 shows the complete list of the FT801 registers. Refer to "**FT80x Programmer Guide**" - Chapter 2 for details of the register function.

Address	Register Name	Bits	Access	Reset value	Description
102400h	REG_ID	8	r/o	7Ch	Identification register, always reads as 7Ch
102404h	REG_FRAMES	32	r/o	00000000 h	Frame counter, since reset
102408h	REG_CLOCK	32	r/o	00000000 h	Clock cycles, since reset
10240Ch	REG_FREQUENCY	27	r/w	2DC6C00 h	Main clock frequency
102410h	REG_SCREENSHOT_EN	1	r/w	00h	Set to enable screenshot mode
102414h	REG_SCREENSHOT_Y	9	r/w	000h	Y line number for screenshot
102418h	REG_ SCREENSHOT_START	1	r/w	0h	Screenshot start trigger
10241Ch	REG_CPURESET	1	r/w	0h	Graphics, audio and touch engines reset control
102420h	REG_TAP_CRC	32	r/o	-	Live video tap crc. Frame CRC is computed every DL SWAP.
102424h	REG_TAP_MASK	32	r/w	FFFFFFFF h	Live video tap mask
102428h	REG_HCYCLE	10	r/w	224h	Horizontal total cycle count
10242Ch	REG_HOFFSET	10	r/w	02Bh	Horizontal display start offset
102430h	REG_HSIZE	10	r/w	1E0h	Horizontal display pixel count
102434h	REG_HSYNC0	10	r/w	000h	Horizontal sync fall offset
102438h	REG_HSYNC1	10	r/w	029h	Horizontal sync rise offset
10243Ch	REG_VCYCLE	10	r/w	124h	Vertical total cycle count

Copyright © Bridgetek Pte Ltd

chanhvinh.com

Address	Register Name	Bits	Access	Reset value	Description
102440h	REG_VOFFSET	10	r/w	00Ch	Vertical display start offset
102444h	REG_VSIZE	10	r/w	110h	Vertical display line count
102448h	REG_VSYNC0	10	r/w	000h	Vertical sync fall offset
10244Ch	REG_VSYNC1	10	r/w	00Ah	Vertical sync rise offset
102450h	REG_DLSWAP	2	r/w	0h	Display list swap control
102454h	REG_ROTATE	1	r/w	0h	Screen 180 degree rotate
102458h	REG_OUTBITS	9	r/w	1B6h	Output bit resolution, 3x3x3 bits
10245Ch	REG_DITHER	1	r/w	1h	Output dither enable
102460h	REG_SWIZZLE	4	r/w	00h	Output RGB signal swizzle
102464h	REG_CSPREAD	1	r/w	1h	Output clock spreading enable
102468h	REG_PCLK_POL	1	r/w	0h	PCLK polarity: 0 = output on PCLK rising edge, 1 = output on PCLK falling edge
10246Ch	REG_PCLK	8	r/w	00h	PCLK frequency divider, 0 = disable
102470h	REG_TAG_X	9	r/w	000h	Tag query X coordinate
102474h	REG_TAG_Y	9	r/w	000h	Tag query Y coordinate
102478h	REG_TAG	8	r/o	00h	Tag query result
10247Ch	REG_VOL_PB	8	r/w	FFh	Volume for playback
102480h	REG_VOL_SOUND	8	r/w	FFh	Volume for synthesizer sound
102484h	REG_SOUND	16	r/w	0000h	Sound effect select
102488h	REG_PLAY	1	r/w	0h	Start effect playback
10248Ch	REG_GPIO_DIR	8	r/w	80h	GPIO pin direction, 0 = input , 1 = output
102490h	REG_GPIO	8	r/w	00h	GPIO pin value (bit 0,1,7); output pin drive strength(bit 2-6)
102494h	Reserved	-	-	-	Reserved
102498h	REG_INT_FLAGS	8	r/o	00h	Interrupt flags, clear by read
10249Ch	REG_INT_EN	1	r/w	0h	Global interrupt enable
1024A0h	REG_INT_MASK	8	r/w	FFh	Interrupt enable mask
1024A4h	REG_PLAYBACK_START	20	r/w	00000h	Audio playback RAM start address
1024A8h	REG_PLAYBACK_LENGTH	20	r/w	00000h	Audio playback sample length (bytes)
1024ACh	REG_PLAYBACK_READPTR	20	r/o	-	Audio playback current read pointer
1024B0h	REG_PLAYBACK_FREQ	16	r/w	1F40h	Audio playback sampling frequency (Hz)
1024B4h	REG_PLAYBACK_FORMAT	2	r/w	0h	Audio playback format
1024B8h	REG_PLAYBACK_LOOP	1	r/w	0h	Audio playback loop enable
1024BCh	REG_PLAYBACK_PLAY	1	r/o	0h	Start audio playback
1024C0h	REG_PWM_HZ	14	r/w	00FAh	BACKLIGHT PWM output frequency (Hz)
1024C4h	REG_PWM_DUTY	8	r/w	80h	BACKLIGHT PWM output duty cycle 0=0%, 128=100%
1024C8h	REG_MACRO_0	32	r/w	00000000h	Display list macro command 0
1024CCh	REG_MACRO_1	32	r/w	00000000h	Display list macro command 1
1024D0h – 1024D4h	Reserved	-	-	-	Reserved
1024D8h	REG_SCREENSHOT_BUSY	64	r/o	-	Screenshot ready flags
1024E0h	Reserved	-	-	-	Reserved
1024E4h	REG_CMD_READ	12	r/w	000h	Command buffer read pointer
1024E8h	REG_CMD_WRITE	12	r/w	000h	Command buffer write pointer
1024ECh	REG_CMD_DL	13	r/w	0000h	Command display list offset
1024F0h	REG_TOUCH_MODE	2	r/w	3h	Touch-screen sampling mode

Copyright © Bridgetek Pte Ltd

chanhvinh.com

Address	Register Name	Bits	Access	Reset value	Description
1024F4h	REG_CTOUCH_EXTENDED	1	r/w	1h	Set capacitive touch operation mode: 0: extended mode (multi-touch) 1: FT800 compatibility mode (single touch).
1024F8h	REG_CTOUCH_REG	16	r/w	1770h	CTPM configure register write Bit [7:0]: configure register address Bit [15:8]: configure register value
1024FCh – 102504h	Reserved	-	-	-	Reserved
102508h	REG_CTOUCH_RAW_XY REG_CTOUCH_TOUCH1_XY	32	r/o	-	Compatibility mode: touch-screen raw (x-MSB16; y-LSB16) Extended mode: touch-screen screen data for touch 1 (x-MSB16; y-LSB16)
10250Ch	REG_CTOUCH_TOUCH4_Y	16	r/o	-	Extended mode: touch-screen screen Y data for touch 4
102510h	REG_TOUCH_SCREEN_XY REG_CTOUCH_TOUCH0_XY	32	r/o	-	Compatibility mode: touch-screen screen (x-MSB16; y-LSB16) Extended mode: touch-screen screen data for touch 0 (x-MSB16; y-LSB16)
102514h	REG_TOUCH_TAG_XY	32	r/o	-	Touch-screen screen (x-MSB16; y-LSB16) used for tag lookup
102518h	REG_TOUCH_TAG	8	r/o	-	Touch-screen tag result
10251Ch	REG_CTOUCH_TRANSFORM_A	32	r/w	00010000h	Touch-screen transform coefficient (s15.16)
102520h	REG_CTOUCH_TRANSFORM_B	32	r/w	00000000h	Touch-screen transform coefficient (s15.16)
102524h	REG_CTOUCH_TRANSFORM_C	32	r/w	00000000h	Touch-screen transform coefficient (s15.16)
102528h	REG_CTOUCH_TRANSFORM_D	32	r/w	00000000h	Touch-screen transform coefficient (s15.16)
10252Ch	REG_CTOUCH_TRANSFORM_E	32	r/w	00010000h	Touch-screen transform coefficient (s15.16)
102530h	REG_CTOUCH_TRANSFORM_F	32	r/w	00000000h	Touch-screen transform coefficient (s15.16)
102534h	Reserved	-	-	-	Reserved
102538h	REG_CTOUCH_TOUCH4_X	16	r/o	-	Extended mode: touch-screen screen X data for touch 4
10253Ch – 102550h	Reserved	-	-	-	Reserved
102554h	REG_SCREENSHOT_READ	1	r/w	0h	Set to enable readout of the screenshot of the selected Y line
102558h – 102568h	Reserved	-	-	-	Reserved
10256Ch	REG_TRIM	5	r/w	0h	Internal relaxation clock trimming
102570h	Reserved	-	-	-	Reserved
102574h	REG_CTOUCH_DIRECT_XY REG_CTOUCH_TOUCH2_XY	32	r/o	-	Compatibility mode: Touch screen direct (x-MSB16; y-LSB16) conversions Extended mode: touch-screen screen data for touch 2 (x-MSB16; y-LSB16)
102578h	REG_CTOUCH_DIRECT_Z1Z2 REG_CTOUCH_TOUCH3_XY	32	r/o	-	Compatibility mode: Touch screen direct (z1-MSB16; z2-LSB16) conversions Extended mode: touch-screen screen data for touch 3 (x-MSB16; y-LSB16)
109000h	REG_TRACKER	32	r/w	00000000	Track register (Track value – MSB16;

Copyright © Bridgetek Pte Ltd

chanhvinh.com

Address	Register Name	Bits	Access	Reset value	Description
				h	Tag value - LSB8)

Table 5-2 Overview of FT801 Registers

Note: All register addresses are 4-byte aligned. The value in "Bits" column refers to the number of valid bits from bit 0 unless otherwise specified; other bits are reserved.

chanhvinh.com

6 Devices Characteristics and Ratings

6.1 Absolute Maximum Ratings

The absolute maximum ratings for the FT801 device are as follows. These are in accordance with the Absolute Maximum Rating System (IEC 60134). Exceeding these may cause permanent damage to the device.

Parameter	Value	Unit
Storage Temperature	-65 to +150	°C
Floor Life (Out of Bag) At Factory Ambient (30°C / 60% Relative Humidity)	168 (IPC/JEDEC J-STD-033A MSL Level 3 Compliant)*	Hours
Ambient Temperature (Power Applied)	-40 to +85	°C
VCC Supply Voltage	0 to +4	V
VCCIO Supply Voltage	0 to +4	V
DC Input Voltage	-0.5 to + (VCCIO + 0.3)	V

Table 6-1 Absolute Maximum Ratings

* If the devices are stored out of the packaging, beyond this time limit, the devices should be baked before use. The devices should be ramped up to a temperature of +125°C and baked for up to 17 hours.

6.2 DC Characteristics

(Ambient Temperature = -40°C to +85°C)

Parameter	Description	Minimum	Typical	Maximum	Units	Conditions
VCCIO	VCCIO operating supply voltage	1.62	1.80	1.98	V	Normal Operation
		2.25	2.50	2.75	V	
		2.97	3.30	3.63	V	
VCC	VCC operating supply voltage	2.97	3.30	3.63	V	Normal Operation
Icc1	Power Down current	-	1.0	-	µA	Power down mode
Icc2	Sleep current	-	250	-	µA	Sleep Mode
Icc3	Standby current	-	1.5	-	mA	Standby Mode
Icc4	Operating current	-	24	-	mA	Normal Operation
VCC1V2	Regulator Output voltage	-	1.20	-	V	Normal Operation

Table 6-2 Operating Voltage and Current

Parameter	Description	Minimum	Typical	Maximum	Units	Conditions
Voh	Output Voltage High	2.4	-	-	V	Ioh=4mA
Vol	Output Voltage Low	-	-	0.4	V	Iol=4mA
Vih	Input High Voltage	2.0	-	-	V	
Vil	Input Low Voltage	-	-	0.8	V	
Vth	Schmitt Hysteresis Voltage	0.3	0.45	0.5	V	
Iin	Input leakage current	-10	-	10	uA	Vin = VCCIO or 0
Ioz	Tri-state output leakage current	-10	-	10	uA	Vin = VCCIO or 0

Table 6-3 Digital I/O Pin Characteristics (VCC/VCCIO = +3.3V, Standard Drive Level)

Parameter	Description	Minimum	Typical	Maximum	Units	Conditions
Voh	Output Voltage High	VCCIO-0.4	-	-	V	Ioh=4mA
Vol	Output Voltage Low	-	-	0.4	V	Iol=4mA
Vih	Input High Voltage	0.7 X VCCIO	-	-	V	-
Vil	Input Low Voltage	-	-	0.3 X VCCIO	V	-

Copyright © Bridgetek Pte Ltd

chanhvinh.com

Vth	Schmitt Hysteresis Voltage	0.28	0.39	0.5	V	-
Iin	Input leakage current	-10	-	10	uA	Vin = VCCIO or 0
Ioz	Tri-state output leakage current	-10	-	10	uA	Vin = VCCIO or 0

Table 6-4 Digital I/O Pin Characteristics (VCCIO = +2.5V, Standard Drive Level)

Parameter	Description	Minimum	Typical	Maximum	Units	Conditions
Voh	Output Voltage High	VCCIO-0.4	-	-	V	Ioh=4mA
Vol	Output Voltage Low	-	-	0.4	V	Iol=4mA
Vih	Input High Voltage	0.7 X VCCIO	-	-	V	-
Vil	Input Low Voltage	-	-	0.3 X VCCIO	V	-
Vth	Schmitt Hysteresis Voltage	0.25	0.35	0.5	V	-
Iin	Input leakage current	-10	-	10	uA	Vin = VCCIO or 0
Ioz	Tri-state output leakage current	-10	-	10	uA	Vin = VCCIO or 0

Table 6-5 Digital I/O Pin Characteristics (VCCIO = +1.8V, Standard Drive Level)

6.3 AC Characteristics

6.3.1 System clock

Parameter	Value			Units
	Minimum	Typical	Maximum	
Internal Relaxation Clock				
Untrimmed frequency range	4.46	6.7	12.11	MHz
Trimmed frequency	-	12	-	MHz
Frequency tuning accuracy	-2.5	-	+2.5	%
Frequency variation over voltage and temperature	-3	-	+3	%
Crystal				
Frequency	-	12.000	-	MHz
X1/X2 Capacitance	-	5	10	pF
External clock input				
Frequency	-	12.000	-	MHz
Duty cycle	45	50	55	%
Input voltage on X1/CLKIN	-	3.3	-	Vp-p

Table 6-6 System clock characteristics (Ambient Temperature = -40°C to +85°C)

6.3.2 Host Interface SPI Mode 0

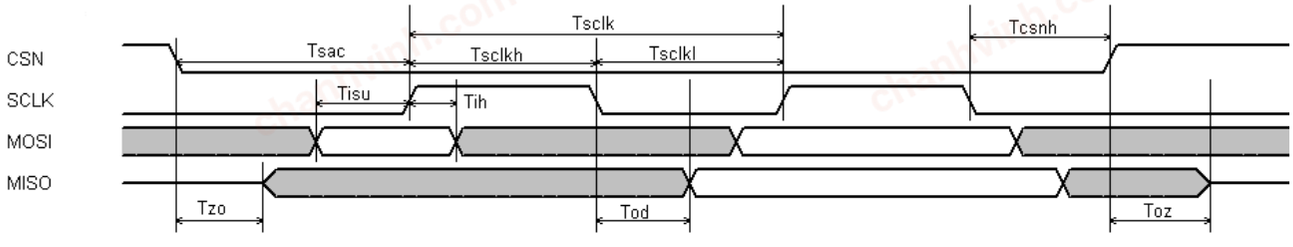

Figure 6-1 SPI Interface Timing

Copyright © Bridgetek Pte Ltd

chanhvinh.com

Parameter	Description	VCC(I/O)=1.8V		VCC(I/O)=2.5V		VCC(I/O)=3.3V		Units
		Min	Max	Min	Max	Min	Max	
Tsclk	SPI clock period	60	-	40	-	33	-	ns
Tsclkl	SPI clock low duration	25	-	16	-	13	-	ns
Tsclkh	SPI clock high duration	25	-	16	-	13	-	ns
Tsac	SPI access time	16	-	16	-	16	-	ns
Tisu	Input Setup	12	-	11	-	11	-	ns
Tih	Input Hold	3	-	3	-	3	-	ns
Tzo	Output enable delay	0	30	0	20	0	16	ns
Toz	Output disable delay	0	30	0	20	0	16	ns
Tod	Output data delay	0	24	0	15	0	12	ns
Tcsnh	CSN hold time	0	-	0	-	0	-	ns

Table 6-7 SPI Interface Timing Specification

6.3.3 Host Interface I2C Mode Timing

Parameter	Description	Standard-mode		Fast-mode		Fast-plus mode		High speed mode		Unit
		Min	Max	Min	Max	Min	Max	Min	Max	
Fscl	I2C SCL clock frequency	0	100	0	400	0	1000	0	3400	kHz
Tscll	clock low period	4.7	-	1.3	-	0.5	-	0.16	-	µs
Tsclh	clock high period	4.0	-	0.6	-	0.26	-	0.06	-	µs
Tsu	Data setup time	250	-	100	-	50	-	10	-	ns
Thd	Data hold time	0	-	0	-	0	-	0	70	ns
Tr	Rise time	-	1000	-	300	-	120	10	40	ns
Tf	Fall time	-	300	-	300	-	120	10	40	ns

Table 6-8 I2C Interface Timing

6.3.4 RGB Video Timing

Parameter	Description	VCC=3.3V			Units
		Min	Typ	Max	
Tpclk	Pixel Clock period	78	104	-	ns
Tpclkdc	Pixel Clock duty cycle	40	-	60	%
Thc	Hsync to Clock	30	-	-	ns
Thwh	HSYNC width (REG_HSYNC1-REG_HSYNC0)	1	41	-	Tpclk
Tvwh	VSYNC width (REG_VSYNC1-REG_VSYNC0)	1	10	-	Th
Th	HSYNC Cycle (REG_HCYCLE)	-	525	-	Tpclk
Tvsu	VSYNC setup	30	-	-	ns
Tvhd	VSYNC hold	10	-	-	ns
Thsu	HSYNC setup	30	-	-	ns
Thhd	HSYNC hold	10	-	-	ns
Tdsu	DATA setup	20	-	-	ns
Tdhd	DATA hold	10	-	-	ns
Tesu	DE setup	30	-	-	ns
Tehd	DE hold	10	-	-	ns

Table 6-9 RGB Video Timing Characteristics

Copyright © Bridgetek Pte Ltd

chanhvinh.com

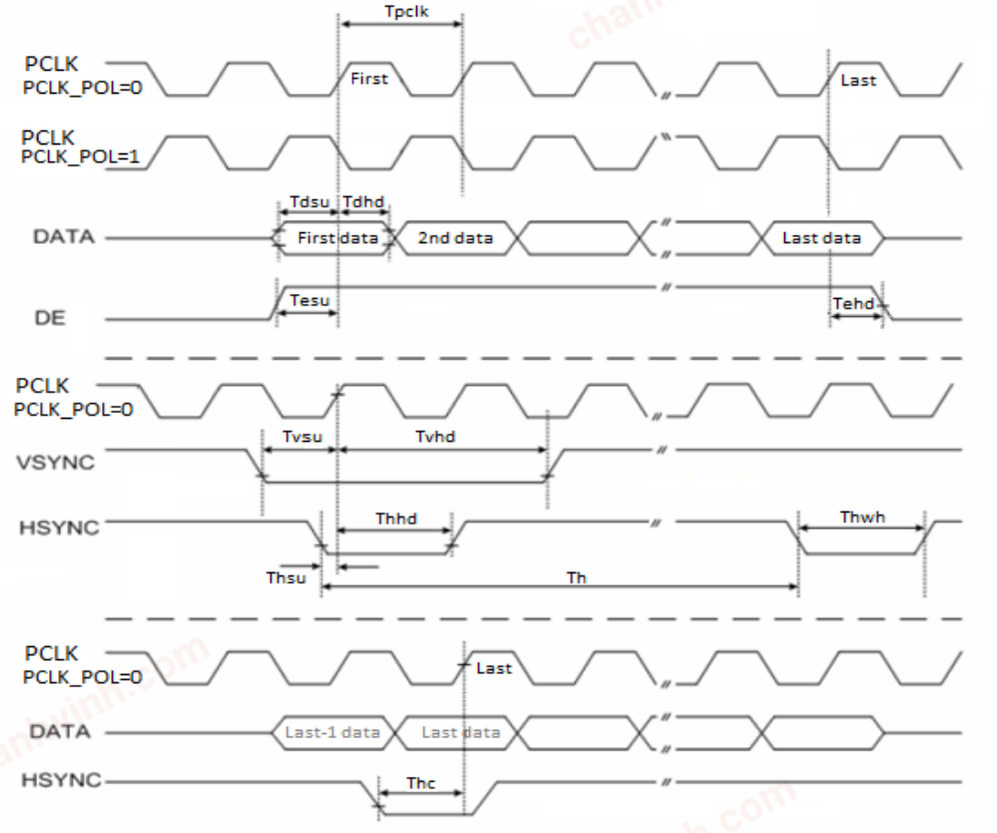

Figure 6-2 RGB Video Signal Timing

chanhvinh.com

7 Application Examples

7.1 Examples of LCD Interface connection

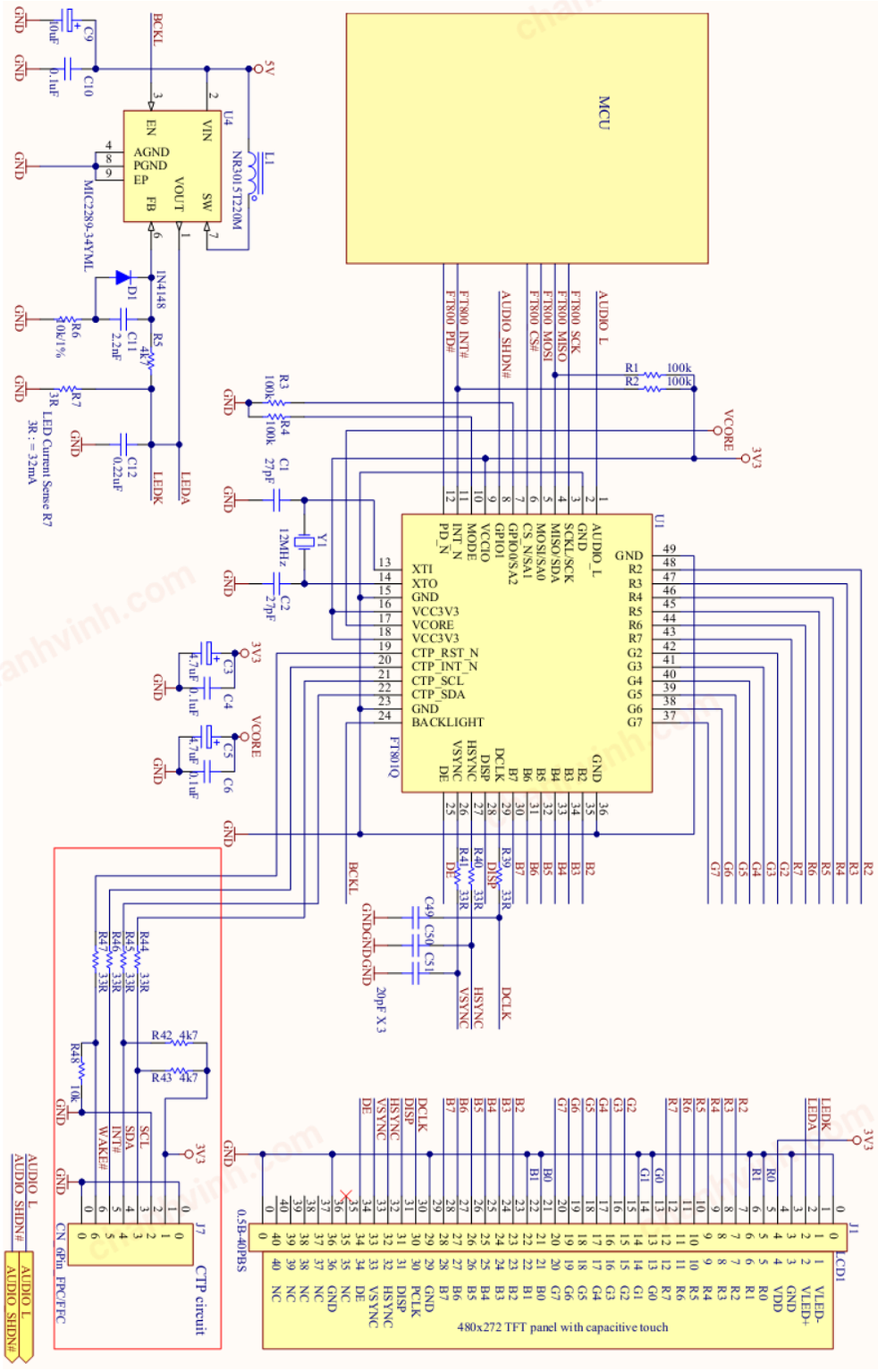

Figure 7-1 FT801 Reference Design Schematic

Copyright © Bridgetek Pte Ltd

chanhvinh.com

8 Package Parameters

The FT801 is available in VQFN-48 package. The solder reflow profile for all packages is described in following sections.

8.1 Part Markings

8.1.1 Top Side

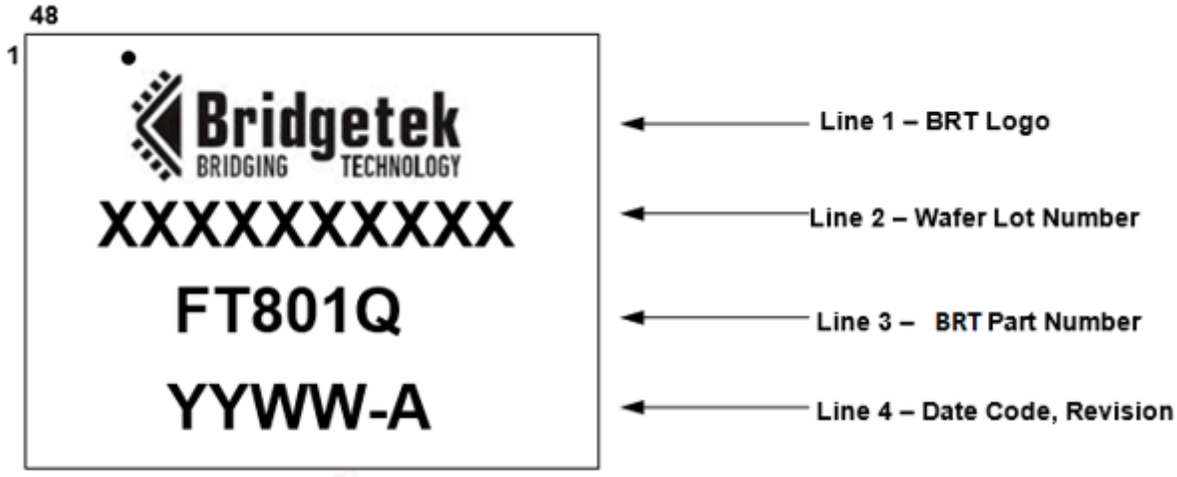

Notes:

1. YYWW = Date Code, where YY is year and WW is week number
2. Pre date code 1727 – company logo was FTDI
3. Marking alignment should be centre justified
4. Laser Marking should be used
5. All marking dimensions should be marked proportionally. Marking font should be using standard font (Roman Simplex)

8.1.2 Bottom Side

No markings should be placed on the bottom side.

Copyright © Bridgetek Pte Ltd

chanhvinh.com

8.2 VQFN-48 Package Dimensions

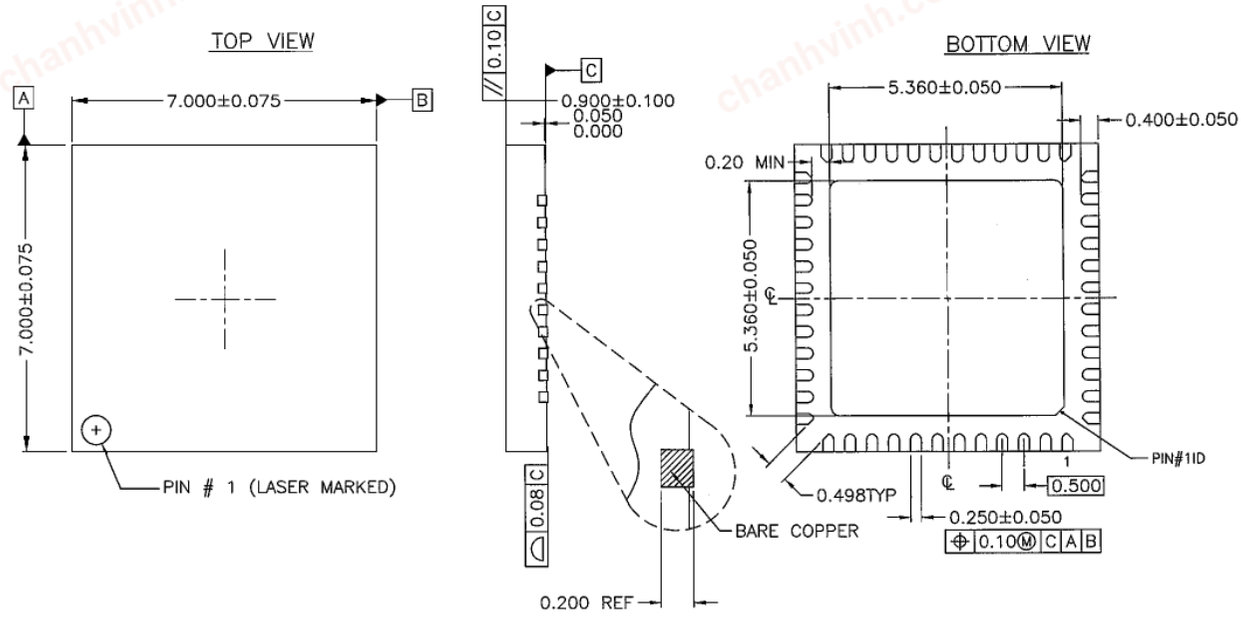

Figure 8-1 VQFN-48 Package Dimensions

Copyright © Bridgetek Pte Ltd

chanhvinh.com

8.3 Solder Reflow Profile

The FT801 is supplied in a Pb free VQFN-48 package. The recommended solder reflow profile for the package is shown in Figure 8-2.

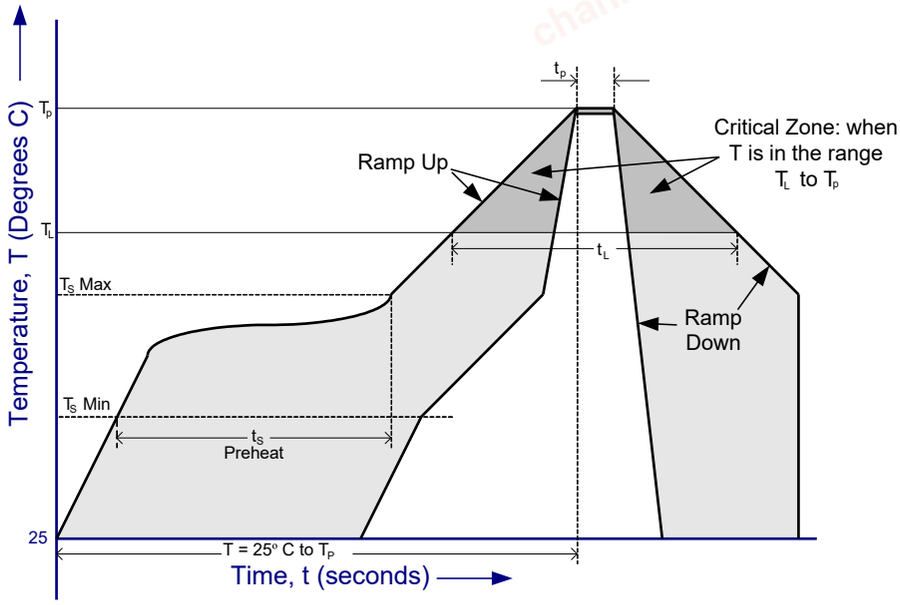

Figure 8-2 FT801 Solder Reflow Profile

The recommended values for the solder reflow profile are detailed in Table 8-1. Values are shown for both a completely Pb free solder process (i.e. the FT801 is used with Pb free solder), and for a non-Pb free solder process (i.e. the FT801 is used with non-Pb free solder).

Profile Feature	Pb Free Solder Process	Non-Pb Free Solder Process
Average Ramp Up Rate (T_s to T_p)	3°C / second Max.	3°C / Second Max.
Preheat - Temperature Min (T_s Min.) - Temperature Max (T_s Max.) - Time (t_s Min to t_s Max)	 150°C 200°C 60 to 120 seconds	 100°C 150°C 60 to 120 seconds
Time Maintained Above Critical Temperature T_L: - Temperature (T_L) - Time (t_L)	 217°C 60 to 150 seconds	 183°C 60 to 150 seconds
Peak Temperature (T_p)	260°C	240°C
Time within 5°C of actual Peak Temperature (t_p)	20 to 40 seconds	20 to 40 seconds
Ramp Down Rate	6°C / second Max.	6°C / second Max.
Time for T= 25°C to Peak Temperature, T_p	8 minutes Max.	6 minutes Max.

Table 8-1 Reflow Profile Parameter Values

Copyright © Bridgetek Pte Ltd

chanhvinh.com

9 Contact Information

Refer to https://brtchip.com/contact-us/ for contact information.

Distributor and Sales Representatives

Please visit the Sales Network page of the Bridgetek Web site for the contact details of our distributor(s) and sales representative(s) in your country.

System and equipment manufacturers and designers are responsible to ensure that their systems, and any Bridgetek Pte Ltd (BRT Chip) devices incorporated in their systems, meet all applicable safety, regulatory and system-level performance requirements. All application-related information in this document (including application descriptions, suggested Bridgetek devices and other materials) is provided for reference only. While Bridgetek has taken care to assure it is accurate, this information is subject to customer confirmation, and Bridgetek disclaims all liability for system designs and for any applications assistance provided by Bridgetek. Use of Bridgetek devices in life support and/or safety applications is entirely at the user's risk, and the user agrees to defend, indemnify and hold harmless Bridgetek from any and all damages, claims, suits or expense resulting from such use. This document is subject to change without notice. No freedom to use patents or other intellectual property rights is implied by the publication of this document. Neither the whole nor any part of the information contained in, or the product described in this document, may be adapted or reproduced in any material or electronic form without the prior written consent of the copyright holder. Bridgetek Pte Ltd, 1 Tai Seng Avenue, Tower A, #03-05, Singapore 536464. Singapore Registered Company Number: 201542387H.

chanhvinh.com

Appendix A – References

Document References

AN_299 FT800 FT801 Internal Clock Trimming

Acronyms & Abbreviations

Terms	Description
ADPCM	Adaptive Differential Pulse Code Modulation
ASCII	American Standard Code for Information Interchange
EVE	Embedded Video Engine
HMI	Human Machine Interfaces
I^2C	Inter-Integrated Circuit
LCD	Liquid Crystal Display
LED	Light Emitting Diode
MCU	Micro Controller Unit
MPU	Micro Processor Unit
PCM	Pulse Code Modulation
PLL	Phased Locked Loop
PWM	Pulse Width Modulation
QVGA	Quarter Video Graphics Array
ROM	Read Only Memory
SPI	Serial Peripheral Interface
VQFN	Very Thin Quad Flat Non-Leaded Package

Copyright © Bridgetek Pte Ltd

chanhvinh.com

Appendix B - List of Figures and Tables

List of Figures

Figure 2-1 FT801 Block Diagram 3
Figure 2-2 FT801 System Design Diagram 3
Figure 3-1 Pin Configuration VQFN-48 (top view) 6
Figure 4-1 Host Interface Options 9
Figure 4-2 SPI Interface 1.8-3.3V connection 10
Figure 4-3 SPI Interface 5V connection 10
Figure 4-4 Internal relaxation oscillator connection 14
Figure 4-5 Crystal oscillator connection 14
Figure 4-6 External clock input 14
Figure 4-7 Touch screen connection 24
Figure 4-8 1.2V regulator 26
Figure 4-9 Power State Transition 27
Figure 6-1 SPI Interface Timing 35
Figure 6-2 RGB Video Signal Timing 37
Figure 7-1 FT801 Reference Design Schematic 38
Figure 8-1 VQFN-48 Package Dimensions 40
Figure 8-2 FT801 Solder Reflow Profile 41

List of Tables

Table 3-1 FT801Q pin description 8
Table 4-1 Host memory read transaction (SPI) 11
Table 4-2 Host memory write transaction (SPI) 12
Table 4-3 Host command transaction (SPI) 12
Table 4-4 Host Command Table 13
Table 4-5 Interrupt Flags bit assignment 13
Table 4-6 Font table format 16
Table 4-7 ROM font table 16
Table 4-8 ROM font ASCII character width in pixels 19
Table 4-9 ROM font Extended ASCII characters 19
Table 4-10 REG_SWIZZLE RGB Pins Mapping 20
Table 4-11 Output drive current selection 21
Table 4-12 Sound Effect 22
Table 4-13 MIDI Note Effect 23
Table 4-14 Touch Controller Operating Mode 24
Table 4-15 Power supply 25
Table 4-16 Pin Status 29
Table 5-1 FT801 Memory Map 30
Table 5-2 Overview of FT801 Registers 33

Copyright © Bridgetek Pte Ltd

chanhvinh.com

Table 6-1 Absolute Maximum Ratings 34
Table 6-2 Operating Voltage and Current 34
Table 6-3 Digital I/O Pin Characteristics (VCC/VCCIO = +3.3V, Standard Drive Level) 34
Table 6-4 Digital I/O Pin Characteristics (VCCIO = +2.5V, Standard Drive Level) 35
Table 6-5 Digital I/O Pin Characteristics (VCCIO = +1.8V, Standard Drive Level) 35
Table 6-6 System clock characteristics (Ambient Temperature = -40°C to +85°C) 35
Table 6-7 SPI Interface Timing Specification 36
Table 6-8 I2C Interface Timing 36
Table 6-9 RGB Video Timing Characteristics 36
Table 8-1 Reflow Profile Parameter Values 41

chanhvinh.com

chanhvinh.com

Appendix C - Revision History

Document Title: FT801 Embedded Video Engine Datasheet
Document Reference No.: BRT_000001
Clearance No.: BRT#003
Product Page: http://brtchip.com/product
Document Feedback: DS_FT801

Revision	Changes	Date
Version 1.0	Initial Release	14-07-2014
Version 1.1	Dual branding to reflect the migration of the product to the Bridgetek name – logo changed, copyright changed, contact information changed	13-09-2016
Version 1.2	Document Migrated from Dual branding (FTDI/BRT) to Bridgetek – Dual branding logo replaced with BRT Logo; All document reference hyperlinks updated to point BRT wesbite as required; Updated the chip markings from FTDI to BRT in Figure 3-1 Pin Configuration VQFN-48 (top view); Product image updated on the cover page	30-06-2017
Version 1.3	Updated section 1.1 Packaging Quantities Updated Figure 8.1	24-04-2019
Version 1.4	Updated the following – IC Image on the cover page; BRT Logo line of the package marking; Company Address	03-02-2025

Copyright © Bridgetek Pte Ltd