chanhvinh.com

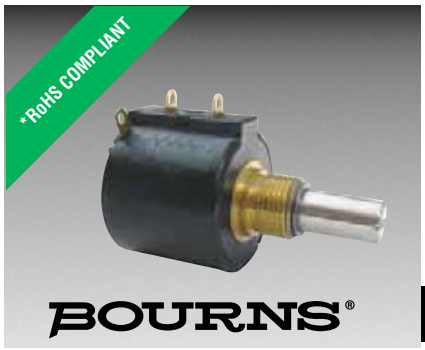

Features

- Wirewound and Hybritron® elements
- High rotational life
- Optional 0.1 % linearity
- Optional A/R lug
- RoHS compliant*
- Suitable for use under some side load conditions
- Designed for HMI and MMI applications
- Dual gang option
- Servo mount option
- Dual ball bearing option

3549 - 10-Turn Precision Potentiometer

Electrical Characteristics[1]	Wirewound Element	Hybritron® Element
Standard Resistance Range	100 to 100K ohms	1K to 100K ohms
Total Resistance Tolerance	±3 %	±10 %
Independent Linearity	±0.2 %	±0.2 %
Independent Linearity (Maximum Practical)	±0.1 %	±0.1 %
Effective Electrical Angle	3600 ° +10 °, -0 °	3600 ° +10 °, -0 °
Absolute Minimum Resistance/End Voltage (whichever is greater)	1 ohm or 0.1 % maximum	0.2 % maximum
Noise/Output Smoothness	100 ohms maximum	0.10 % maximum
Max. Wiper Current @ 5K ohms	20 mA	10 mA
Dielectric Withstanding Voltage (MIL-STD-202, Method 301)		
Sea Level	1,000 VAC minimum	1,000 VAC minimum
Insulation Resistance (500 VDC)	1,000 megohms minimum	1,000 megohms minimum
Resolution	See How to Order chart	Essentially infinite
Power Rating (Voltage Limited By Power Dissipation)		
+70 °C	2 watts	2 watts
+125 °C	0 watt	0 watt

Environmental Characteristics[1]		
Operating Temperature Range		
Dynamic	-40 °C to +125 °C	-40 °C to +125 °C
Static	-55 °C to +125 °C	-55 °C to +125 °C
Temperature Coefficient (Over Static Temperature Range)	±50 ppm/°C	±100 ppm/°C
Temperature Cycling (5 Cycles Over Static Temperature Range)	±2 % TR shift max.	±4 % TR shift max.
Vibration (15 Gs, 10 Hz to 2 kHz)		
Wiper Bounce	0.1 ms max.	0.1 ms max.
Shock (100 Gs, 6 ms sawtooth)		
Wiper Bounce	0.1 ms max.	0.1 ms max.
Load Life (1,000 hours @ 70 °C)	±2 % TR shift	±5 % TR shift max.
Rotational Life		
No Load or Powered	2,000,000 shaft revolutions	5,000,000 shaft revolutions
No Load or Powered (Dual Ball Bearing)	N/A	10,000,000 shaft revolutions
Moisture Resistance (Mil-Std-202, Method 103)	±2 % TR shift max.	±5 % TR shift max.
IP Rating	IP 50	IP 50

Mechanical Characteristics[1]	
Mechanical Angle	3600 ° +10 °, -0 °
Backlash	1.0 ° max.
Stop Strength	53 N-cm (75 oz-in.) min.
Torque	
Starting	0.5 N-cm (0.7 oz.-in.) max.
Running	0.5 N-cm (0.7 oz.-in.) max.
Clutch	1.0 to 4.2 N-cm (1.5 to 6.0 oz.-in.)
Mounting	170-200 N-cm (15-18 in.-lb.) max.
Shaft Runout T.I.R.	0.08 mm (0.003 in.)
Lateral Runout T.I.R.	0.13 mm (0.005 in.)
Shaft End Play T.I.R.	0.15 mm (0.006 in.)
Shaft Radial Play T.I.R.	0.08 mm (0.003 in.)
Pilot Diameter Runout T.I.R.	0.08 mm (0.003 in.)
Weight	
Single	20 gm (0.7 oz.) typ.
Dual	36 gm (1.27 oz) typ.
Shaft Side Load (Max. Allowable)	
Nickel Plated Brass Shaft w/Brass Bushing	50 gmf (1.7 ozf)
Stainless Steel Shaft w/Bronze Bushing	250 gmf (8.8 ozf)
Terminals	Gold-plated solder lugs
Soldering Condition	
Manual Soldering	96.5Sn/3.0Ag/0.5Cu solid wire or no-clean rosin cored wire, 370 °C (700 °F) max. for 3 seconds
Wave Soldering	96.5Sn/3.0Ag/0.5Cu solder with no-clean flux, 260 °C (500 °F) max. for 5 seconds
Wash processes	Not recommended
Mounting Hardware	One lockwasher and one mounting nut is shipped with each potentiometer
Recommended Panel Thickness (Bushing Mount)	2.46-3.81 mm (0.097-0.150 in.)
Marking	Manufacturer's symbol, model number, product code and date code
Standard Packaging	Plastic trays (5 pcs./tray)

[1]At room ambient: +25 °C nominal and 50 % relative humidity nominal, except as noted.
For other options, please consult factory.

WARNING
Cancer and Reproductive Harm
www.P65Warnings.ca.gov

*RoHS Directive 2015/863, Mar 31, 2015 and Annex.

Specifications are subject to change without notice. Users should verify actual device performance in their specific applications. The products described herein and this document are subject to specific legal disclaimers as set forth on the last page of this document, and at www.bourns.com/docs/legal/disclaimer.pdf

chanhvinh.com

3549 - 10-Turn Precision Potentiometer

BOURNS®

Product Dimensions

Single Gang, Bushing Mount

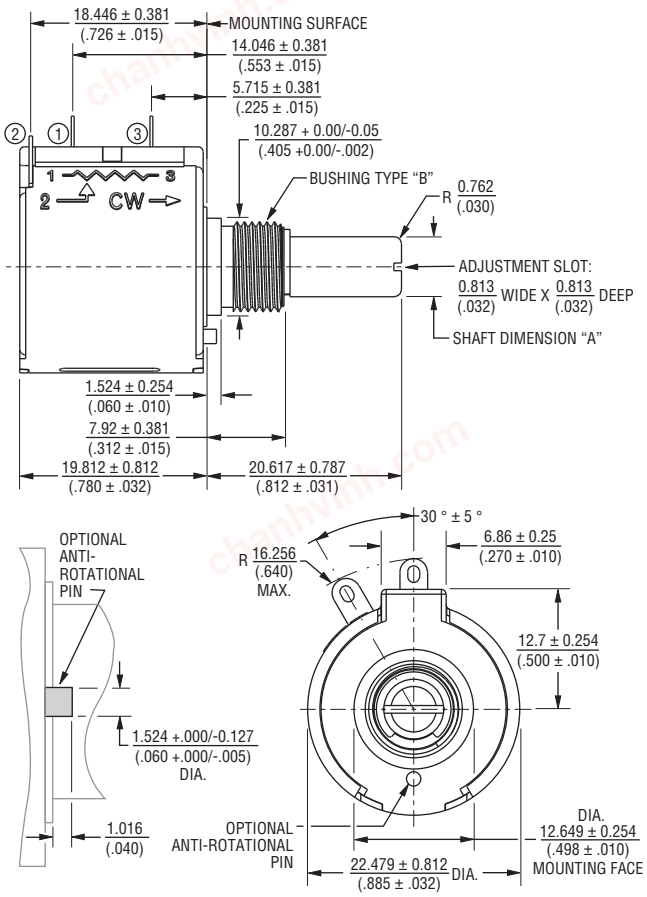

TOLERANCES: EXCEPT WHERE NOTED

DECIMALS: .XX ± .50 (.02) .XXX ± .127 (.005) .XXXX ± .0127 (.0005)

DIMENSIONS: MM (IN)

Bushing Selection Code	Shaft Dimension "A"	Shaft Material	Bushing Type "B"	Bushing Material
A	6.34 +0/-0.022 (0.2497 +0/-0.0009)	Nickel Plated Brass	3/8 " 32-UNEF- 2A THD.	Brass
B	6.00 +0/-0.022 (0.2362 +0/-0.0009)	Nickel Plated Brass	M9 X 0.75-8g	Brass
C	6.34 +0/-0.007 (0.2497 +0/-0.0003)	Stainless Steel	3/8 " 32-UNEF- 2A THD.	Bronze
D	6.00 +0/-0.007 (0.2362 +0/-0.0003)	Stainless Steel	M9 X 0.75-8g	Bronze
G	6.34 +0/-0.007 (0.2497 +0/-0.0003)	Stainless Steel	3/8 " 32-UNEF- 2A THD.	Bronze
H	6.00 +0/-0.007 (0.2362 +0/-0.0003)	Stainless Steel	M9 X 0.75-8g	Bronze

Dual Gang, Bushing Mount

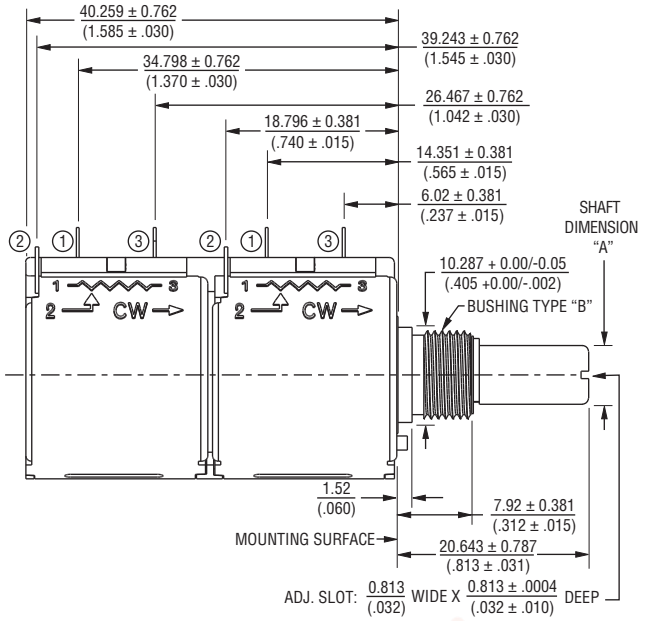

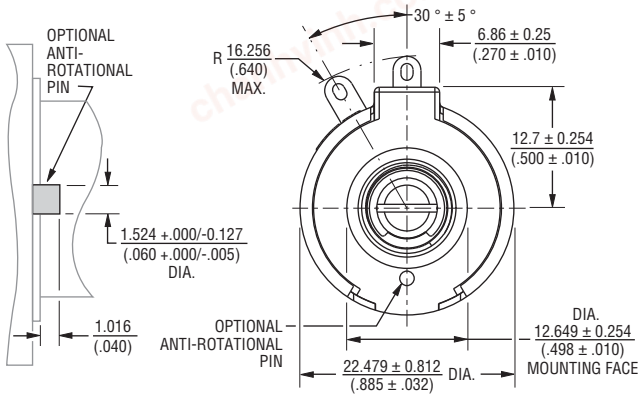

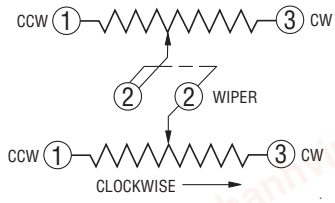

Specifications are subject to change without notice.
Users should verify actual device performance in their specific applications.
The products described herein and this document are subject to specific legal disclaimers as set forth on the last page of this document, and at
www.bourns.com/docs/legal/disclaimer.pdf.

chanhvinh.com

3549 - 10-Turn Precision Potentiometer

BOURNS®

Product Dimensions

Single Gang, Servo Mount

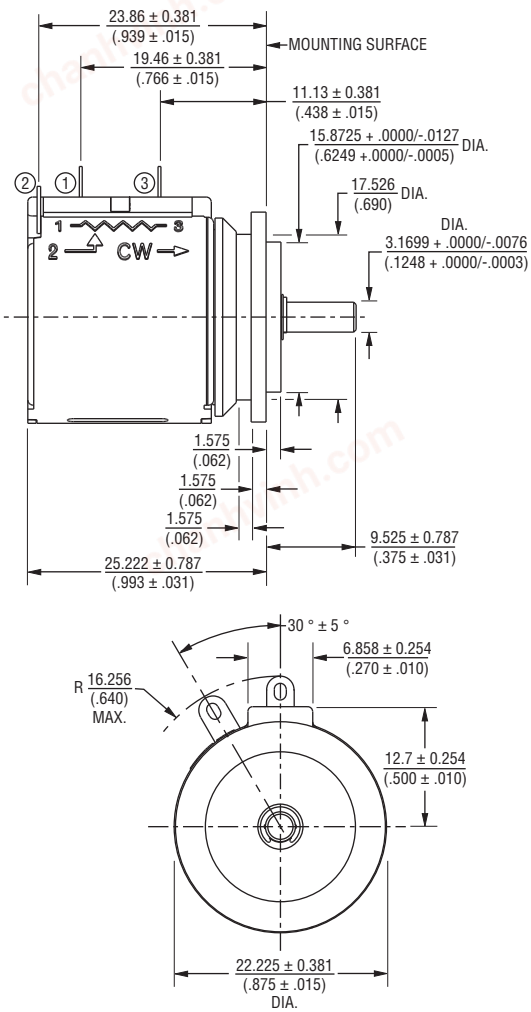

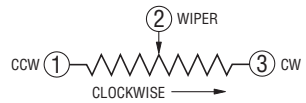

TOLERANCES: EXCEPT WHERE NOTED

DECIMALS: .XX ± .50 (.02) .XXX ± .127 (.005) .XXXX ± .0127 (.0005)

DIMENSIONS: MM (IN)

Single Gang, Servo Mount, Dual Ball Bearing

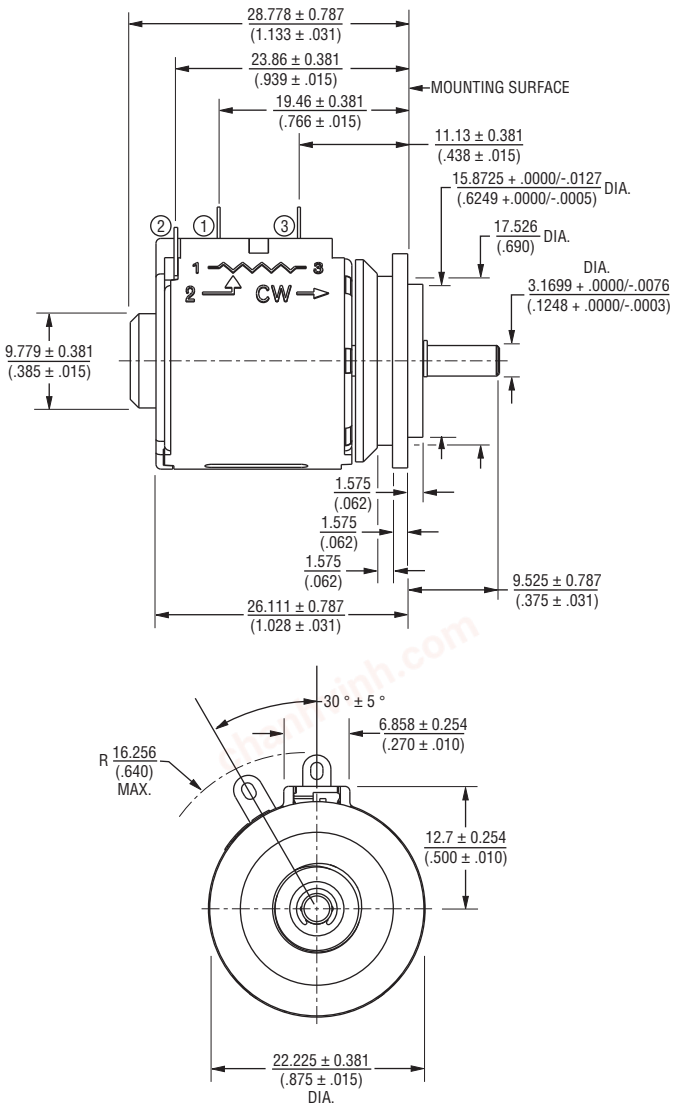

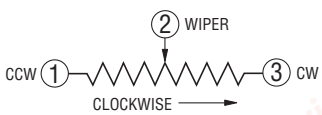

Specifications are subject to change without notice.
Users should verify actual device performance in their specific applications.
The products described herein and this document are subject to specific legal disclaimers as set forth on the last page of this document, and at www.bourns.com/docs/legal/disclaimer.pdf.

chanhvinh.com

3549 - 10-Turn Precision Potentiometer

BOURNS®

Product Dimensions

Dual Gang, Servo Mount

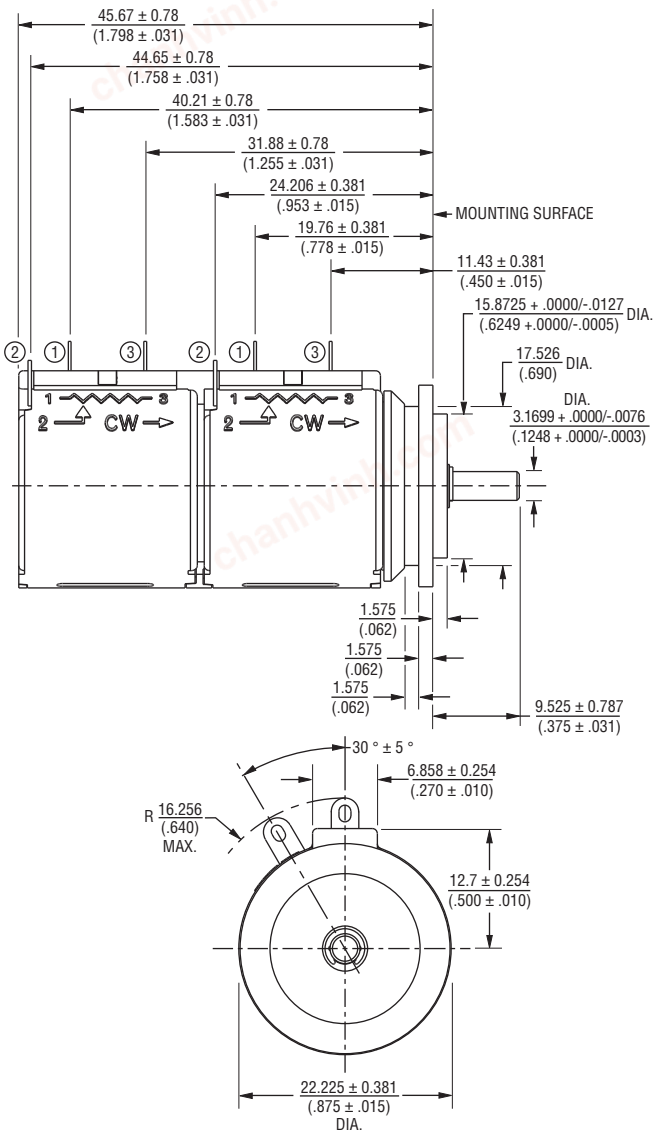

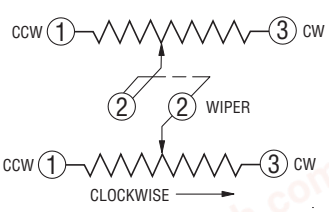

Panel Thickness Dimensions

(For Bushing Mount Only)

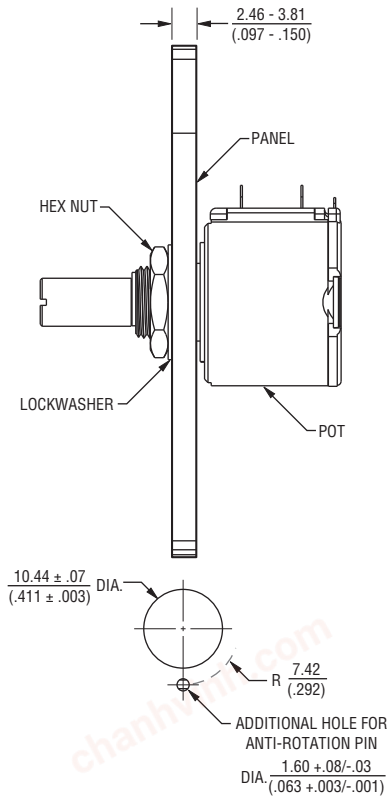

Anti-rotation pin hole is shown at six o'clock position for reference only. The actual location is determined by the customer's application. Refer to the front view of the potentiometer to see the location of the optional A/R pin.

Panel thickness and hole diameters are recommended for best fit. However, customers may adjust the dimensions to suit their specific application.

DIMENSIONS: MM (INCHES) TOLERANCES: ± 0.127 (.005)

Specifications are subject to change without notice.
Users should verify actual device performance in their specific applications.
The products described herein and this document are subject to specific legal disclaimers as set forth on the last page of this document, and at www.bourns.com/docs/legal/disclaimer.pdf.

chanhvinh.com

3549 - 10-Turn Precision Potentiometer

BOURNS®

How To Order

3	5	4	9	S	-	2	A	A	-	1	0	3	/	1	0	3	A

MODEL DESIGNATOR	
Code	**Description**
3549	10-Turn

ELEMENT TYPE	
Code	**Description**
H	Hybritron®
S	Wirewound

NO. OF SECTIONS	
Code	**Description**
1	Single
2	Dual

ANTI-ROTATION LUG	
Code	**Description**
A	None
B	180 °

* Anti-rotation lug is not available for servo mount versions.

INDEPENDENT LINEARITY	
Code	**Description**
A	0.20 %
B	0.10 %

RESISTANCE**		
Code	**Element Type**	**Resolution (%)**
102 (1K ohms)	Hybritron®	—
202 (2K ohms)	Hybritron®	—
502 (5K ohms)	Hybritron®	—
103 (10K ohms)	Hybritron®	—
203 (20K ohms)	Hybritron®	—
503 (50K ohms)	Hybritron®	—
104 (100K ohms)	Hybritron®	—
101 (100 ohms)	Wirewound	0.055
201 (200 ohms)	Wirewound	0.042
501 (500 ohms)	Wirewound	0.031
102 (1K ohms)	Wirewound	0.027
202 (2K ohms)	Wirewound	0.021
502 (5K ohms)	Wirewound	0.016
103 (10K ohms)	Wirewound	0.019
203 (20K ohms)	Wirewound	0.014
503 (50K ohms)	Wirewound	0.011
104 (100K ohms)	Wirewound	0.008

** For Single gang, use only first three digits.
For Dual gang, use six digits separated by a "/".

BUSHING MOUNT						
Code	**Shaft FMS**	**Shaft Dia.**	**Shaft Material**	**Bushing Dia.**	**Bushing Material**	**Slip Clutch**
A	13/16˝	1/4˝	Nickel Plated Brass	3/8˝	Brass	N/A
B	20.6 mm	6 mm	Nickel Plated Brass	9 mm	Brass	N/A
C	13/16˝	1/4˝	Stainless Steel	3/8˝	Bronze	N/A
D	20.6 mm	6 mm	Stainless Steel	9 mm	Bronze	N/A
G	13/16˝	1/4˝	Stainless Steel	3/8˝	Bronze	Yes***
H	20.6 mm	6 mm	Stainless Steel	9 mm	Bronze	Yes***

SERVO MOUNT				
Code	**Shaft FMS**	**Shaft Dia.**	**Shaft Material**	**Ball Bearings**
E	3/8˝	1/8˝	Stainless Steel	N/A
F	3/8˝	1/8˝	Stainless Steel	Front & Rear****

*** Not available in dual gang version.

**** Available in Hybritron® version only and limited to single section.

REV. 10/19

"Hybritron" is a registered trademark of Bourns, Inc.
Specifications are subject to change without notice.
Users should verify actual device performance in their specific applications.
The products described herein and this document are subject to specific legal disclaimers as set forth on the last page of this document, and at www.bourns.com/docs/legal/disclaimer.pdf.

chanhvinh.com

Legal Disclaimer Notice

BOURNS®

This legal disclaimer applies to purchasers and users of Bourns® products manufactured by or on behalf of Bourns, Inc. and its affiliates (collectively, "Bourns").

Unless otherwise expressly indicated in writing, Bourns® products and data sheets relating thereto are subject to change without notice. Users should check for and obtain the latest relevant information and verify that such information is current and complete before placing orders for Bourns® products.

The characteristics and parameters of a Bourns® product set forth in its data sheet are based on laboratory conditions, and statements regarding the suitability of products for certain "typical" applications are based on Bourns' knowledge of typical requirements in generic applications. Bourns assumes that "typical" applications include failsafe/backup features to address critical risks to users and are designed to allow rework of Bourns® product to avoid scrap of a device solely due to malfunctioning Bourns® product. The characteristics and parameters of a Bourns® product in a user application may vary from the data sheet characteristics and parameters due to (i) the combination of the Bourns® product with other components in the user's application, or (ii) the environment of the user application itself. The characteristics and parameters of a Bourns® product also can and do vary in different applications and actual performance may vary over time. Thus, users should always verify the actual performance of the Bourns® product in their specific devices and applications and make their own independent judgments regarding the suitability of Bourns® product and the amount of additional test margin to design into their device or application to compensate for differences between laboratory and real-world conditions.

Unless Bourns has explicitly designated an individual Bourns® product as meeting the requirements of a particular industry standard (e.g., IATF 16949) or a particular qualification (e.g., UL listed or recognized), Bourns is not responsible for any failure of an individual Bourns® product to meet the requirements of such industry standard or particular qualification even if such industry standard or qualification is a "state of art". Users of Bourns® products are responsible for ensuring compliance with safety-related requirements and standards applicable to their devices or applications.

Bourns® products are not recommended, authorized or intended for use in applications where failure or malfunction may result in personal injury, death, or severe property or environmental damage, such as without limitation nuclear, life-critical medical and certain automotive and aviation applications. Except as set forth in the bullet points below or unless expressly and specifically approved in writing on a case-by-case basis by an authorized Bourns' representative, use of any Bourns® products in such unauthorized high-risk applications is at the user's sole risk.

- Bourns considers implantable/invasive devices and devices/procedures designed as life-supporting or life-sustaining by the U.S. Food and Drug Administration or equivalent organizations outside of the United States as "life-critical" medical applications. Bourns expressly identifies those Bourns® standard products that are suitable for use in typical medical applications that are not life-critical in its publication entitled "Bourns Medical Grade Component Guide."

- Bourns expressly identifies those Bourns® standard products that are suitable for use in typical automotive applications associated with any Automate Safety Integrity Level (ASIL) in its publication entitled "Bourns Automotive Grade Component Guide." Bourns' designation of Bourns® product as compliant with the AEC-Q standard does not by itself mean that Bourns has approved such product for use in an automotive application.

- Bourns expressly identifies Bourns® standard products that are suitable for use in the typical aviation applications/systems requiring System Design Assurance Level (RTCA DO-254 DAL) of C, D or E in its publication entitled "Bourns Civilian Aerospace/Aviation Grade Component Guide." Bourns does not test its products for compliance with United States Federal Aviation Administration standards or any other generally equivalent governmental organization standard applicable to products designed or manufactured for use in aviation applications. Use of Bourns® standard components in aviation applications associated with RTCA DO-254 DAL A or B without proper approval noted above shall be at the user's sole risk.

- Bourns will review and authorize on a case-by-case basis the use of Bourns® standard products which are at least AEC-Q compliant in space-related civil applications (rockets, satellites) with a negotiated cross-waiver and indemnity agreement.

The use and level of testing applicable to Bourns® custom products shall be negotiated on a case-by-case basis by Bourns and the user for which such Bourns® custom products are specially designed. Absent a written agreement between Bourns and the user regarding the use and level of such testing, the above provisions applicable to Bourns® standard products shall also apply to such Bourns® custom products.

Use of Bourns® products or Bourns' technology in military/defense applications must be reviewed with Bourns for compliance with applicable export control laws and embargoes. Users shall not sell, transfer, export or re-export (which includes transfers within a country) any Bourns® products or technology or technical data for use in activities which involve the design, development, production, use or stockpiling of nuclear, chemical or biological weapons or missiles, nor shall they use Bourns® products or technology or technical data in any facility which engages in activities relating to such devices. Further, Bourns® products and Bourns' technology and technical data may not under any circumstance be exported or re-exported to countries subject to international sanctions or embargoes. Bourns® products and technology may not, without prior authorization from Bourns and/or the Government of a country where such product/technology is designed and/or manufactured, be resold, transferred, or re-exported (including within the same country) to any party not eligible to receive commodities, software, and technical data originating in such country.

To the maximum extent permitted by applicable law, Bourns disclaims (i) any and all liability for special, punitive, consequential, incidental or indirect damages or lost revenues or lost profits, and (ii) any and all implied warranties (those not based on parameters specified in Bourns' data sheets and/or specifications), including implied warranties of fitness for particular purpose, non-infringement and merchantability.

For your convenience, copies of this Legal Disclaimer Notice with German, Spanish, Japanese, Traditional Chinese and Simplified Chinese bilingual versions are available at:

Web Page: https://www.bourns.com/legal/disclaimers-terms-and-policies
PDF: https://www.bourns.com/docs/Legal/disclaimer.pdf