chanhvinh.com



Features

- Balanced Mini-TRIGARD™ (5 mm diameter, 7.5 mm length)
- Ideal for board level protection of broadband circuits
- Symmetrical breakdown voltage (L-L, L-G)
- Leadless, surface mount for economical assembly
- High surge current rating, low insertion loss
- Stable breakdown throughout life
- Recognized
- RoHS compliant* versions available

2038 Series Miniature Symmetrical 3-Electrode Surface Mount Gas Discharge Tube

Bourns offers a symmetrical surface mount (SM) 3-electrode GDT surge protection device. The industry-leading quality and features of the Bourns® miniature-TRIGARD™ series GDT continue in the 2038 symmetrical version. The 2038 series is ideal for board level protection of high bandwidth applications such as xDSL, cable broadband and high speed Ethernet, due to its symmetrical turn on characteristics as well as high energy-handling capability, long and stable life performance and low capacitance of less than 1 pF. The 2038 series breakdown voltages are nearly equal line to line as well as line to ground. Bourns® Gas Discharge Tubes (GDT) are designed to prevent damage from transient disturbances by acting as a "crowbar" in creating a virtual short-to-ground circuit during conduction. When an electrical surge exceeds the defined breakdown voltage level of the GDT, the gas becomes ionized and rapid conduction takes place. When the surge passes and the system voltage returns to normal levels, the GDT returns to its high-impedance (off) state.

Characteristics

Test Methods per ITU-T K.12, IEEE C62.31 and IEC 61643-311 GDT standards.

Characteristic	Model No.				
	2038-15-SM	2038-20-SM	2038-23-SM	2038-30-SM	2038-35-SM
DC Sparkover ± 25 % @ 100 V/s L1/L2 to Gnd (1)	150 V	200 V	230 V	300 V	350 V
Typical Impulse Sparkover (2) L1/L2 to Gnd					
100V/µs	350 V	425 V	450 V	500 V	600 V
1000V/µs	500 V	575 V	600 V	650 V	750 V

Characteristic	Model No.				
	2038-42-SM	2038-47-SM	2038-60-SM	2038-80-SM	2038-110-SM
DC Sparkover ± 25 % @ 100 V/s L1/L2 to Gnd (1)	420 V	470 V	600 V	800 V	1100 V
Typical Impulse Sparkover (2) L1/L2 to Gnd					
100V/µs	675 V	750 V	850 V	1150 V	1500 V
1000V/µs	850 V	950 V	1100 V	1400 V	1700 V

Impulse Transverse Delay	100 V/µs	< 50 ns
Insulation Resistance (IR)	100 V	> 10^9 Ω
Glow Voltage	10 mA	~ 70 V
Arc Voltage	1 A	~ 10 V
Glow-Arc Transition Current		< 0.5 A
Capacitance	1 MHz	< 1 pF
DC Holdover Voltage (3)	135 V (80 V for Model 2038-15)	< 150 ms
Impulse Discharge Current	10000 A, 8/20 µs (4)	1 operation min.
	5000 A, 8/20 µs	10 operations
	200 A, 10/1000 µs	300 operations
	200 A, 10/700 µs	500 operations
	10 A, 10/1000 µs	1500 operations
Alternating Discharge Current	10 Arms, 1 s (4)	1 operation min.
	5 Arms, 1 s	10 operations
Operating Temperature		-40 to +90 °C
Climatic Category (IEC 60068-1)		40/90/21
Moisture Sensitivity Level		1
ESD Classification (HBM)		6

Notes:

- 2038-15 through 2038-35 UL Recognized , file E153537.
- 2038-80 & 2038-110 UL Recognized , file E313168 (UL 1449).
- The rated discharge current for Mini-TRIGARD™ GDTs is the total current equally divided between each line to ground.
- Surface Mount (SM) parts may show a temporary increase in DCBD after the solder reflow process. Most devices will recover within 24 hours time. It should be noted that there is no quality defect nor change in protection levels during the temporary change in DCBD.
- Sparkover limits after life ±30 %. IR >10^8 Ω.
- Operating characteristics per RUS PE-80 and Telcordia GR 1361 available on request.
- At delivery AQL 0.65 Level II, DIN ISO 2859.
- Bourns recommends reflowing surface mount devices per IPC/JEDEC J-STD-020 rev D.

(1) Line to Line DC Sparkover tolerance typically less than +30 % at 100 V/s.
(2) Impulse Sparkover voltage is defined as typical values of distribution.
(3) Network applied.
(4) DC Sparkover may exceed ±30 % but will continue to protect without venting.

*RoHS Directive 2015/863, Mar 31, 2015 and Annex.
Specifications are subject to change without notice.
Users should verify actual device performance in their specific applications.
The products described herein and this document are subject to specific legal disclaimers as set forth on the last page of this document, and at www.bourns.com/docs/legal/disclaimer.pdf.

chanhvinh.com

Product Dimensions

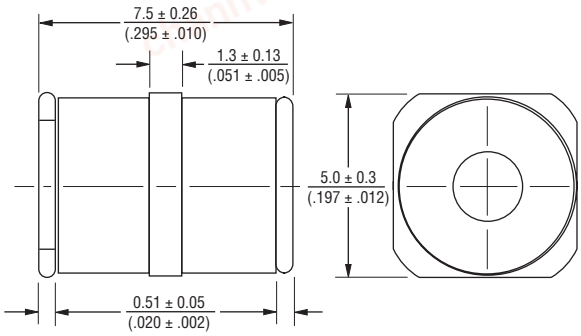

Recommended Pad Layout

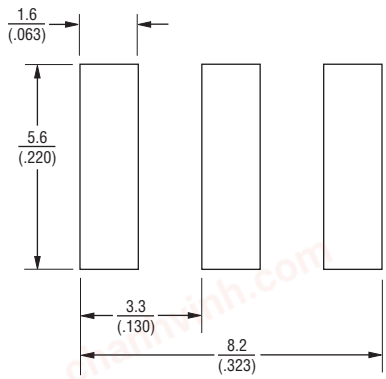

DIMENSIONS: MM / (INCHES)

How to Order

2038 - xx - SM - RP LF

Model Number Designator

Voltage (Divided by 10)

Surface Mount

Packaging Options
- Blank = Bulk Packaging (Standard)
- RP = Reelpack (Optional)
- RP2 = Reelpack (Optional)

RoHS Compliant Option
- Blank = Standard Product
- LF = RoHS Compliant Product

Specifications are subject to change without notice.
Users should verify actual device performance in their specific applications.
The products described herein and this document are subject to specific legal disclaimers as set forth on the last page of this document, and at www.bourns.com/docs/legal/disclaimer.pdf.

chanhvinh.com

Packaging Specifications

Model	Standard Packaging Quantity			
	Bulk (Bag)	Tray	Box	Reel
2038-xx-SM	250		1000	
2038-xx-SM-RP				1000
2038-xx-SM-RP2				1000

The optional -RP & -RP2 reels are 330 mm in diameter and 23 mm wide.

-RP

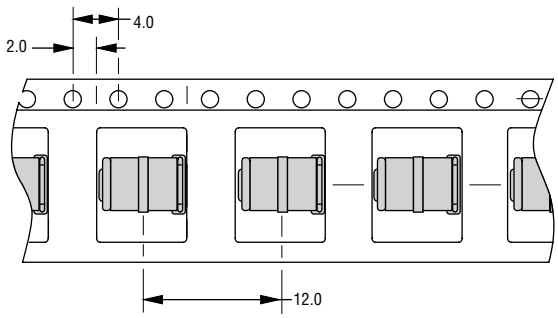

-RP2

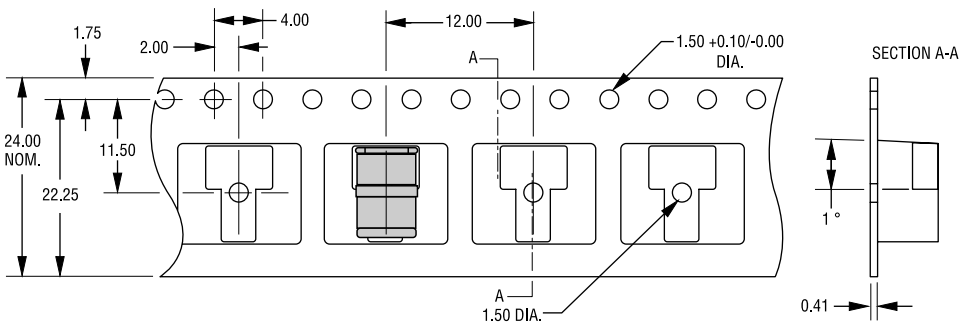

TOLERANCES: ±0.13 UNLESS OTHERWISE SPECIFIED
DIMENSIONS: MILLIMETERS

Specifications are subject to change without notice.
Users should verify actual device performance in their specific applications.
The products described herein and this document are subject to specific legal disclaimers as set forth on the last page of this document, and at www.bourns.com/docs/legal/disclaimer.pdf.

chanhvinh.com

Legal Disclaimer Notice

BOURNS®

This legal disclaimer applies to purchasers and users of Bourns® products manufactured by or on behalf of Bourns, Inc. and its affiliates (collectively, "Bourns").

Unless otherwise expressly indicated in writing, Bourns® products and data sheets relating thereto are subject to change without notice. Users should check for and obtain the latest relevant information and verify that such information is current and complete before placing orders for Bourns® products.

The characteristics and parameters of a Bourns® product set forth in its data sheet are based on laboratory conditions, and statements regarding the suitability of products for certain types of applications are based on Bourns' knowledge of typical requirements in generic applications. The characteristics and parameters of a Bourns® product in a user application may vary from the data sheet characteristics and parameters due to (i) the combination of the Bourns® product with other components in the user's application, or (ii) the environment of the user application itself. The characteristics and parameters of a Bourns® product also can and do vary in different applications and actual performance may vary over time. Users should always verify the actual performance of the Bourns® product in their specific devices and applications, and make their own independent judgments regarding the amount of additional test margin to design into their device or application to compensate for differences between laboratory and real world conditions.

Unless Bourns has explicitly designated an individual Bourns® product as meeting the requirements of a particular industry standard (e.g., ISO/TS 16949) or a particular qualification (e.g., UL listed or recognized), Bourns is not responsible for any failure of an individual Bourns® product to meet the requirements of such industry standard or particular qualification. Users of Bourns® products are responsible for ensuring compliance with safety-related requirements and standards applicable to their devices or applications.

Bourns® products are not recommended, authorized or intended for use in nuclear, lifesaving, life-critical or life-sustaining applications, nor in any other applications where failure or malfunction may result in personal injury, death, or severe property or environmental damage. Unless expressly and specifically approved in writing by two authorized Bourns representatives on a case-by-case basis, use of any Bourns® products in such unauthorized applications might not be safe and thus is at the user's sole risk. Life-critical applications include devices identified by the U.S. Food and Drug Administration as Class III devices and generally equivalent classifications outside of the United States.

Bourns expressly identifies those Bourns® standard products that are suitable for use in automotive applications on such products' data sheets in the section entitled "Applications." Unless expressly and specifically approved in writing by two authorized Bourns representatives on a case-by-case basis, use of any other Bourns® standard products in an automotive application might not be safe and thus is not recommended, authorized or intended and is at the user's sole risk. If Bourns expressly identifies a sub-category of automotive application in the data sheet for its standard products (such as infotainment or lighting), such identification means that Bourns has reviewed its standard product and has determined that if such Bourns® standard product is considered for potential use in automotive applications, it should only be used in such sub-category of automotive applications. Any reference to Bourns® standard product in the data sheet as compliant with the AEC-Q standard or "automotive grade" does not by itself mean that Bourns has approved such product for use in an automotive application.

Bourns® standard products are not tested to comply with United States Federal Aviation Administration standards generally or any other generally equivalent governmental organization standard applicable to products designed or manufactured for use in aircraft or space applications. Bourns expressly identifies Bourns® standard products that are suitable for use in aircraft or space applications on such products' data sheets in the section entitled "Applications." Unless expressly and specifically approved in writing by two authorized Bourns representatives on a case-by-case basis, use of any other Bourns® standard product in an aircraft or space application might not be safe and thus is not recommended, authorized or intended and is at the user's sole risk.

The use and level of testing applicable to Bourns® custom products shall be negotiated on a case-by-case basis by Bourns and the user for which such Bourns® custom products are specially designed. Absent a written agreement between Bourns and the user regarding the use and level of such testing, the above provisions applicable to Bourns® standard products shall also apply to such Bourns® custom products.

Users shall not sell, transfer, export or re-export any Bourns® products or technology for use in activities which involve the design, development, production, use or stockpiling of nuclear, chemical or biological weapons or missiles, nor shall they use Bourns® products or technology in any facility which engages in activities relating to such devices. The foregoing restrictions apply to all uses and applications that violate national or international prohibitions, including embargos or international regulations. Further, Bourns® products and Bourns technology and technical data may not under any circumstance be exported or re-exported to countries subject to international sanctions or embargoes. Bourns® products may not, without prior authorization from Bourns and/or the U.S. Government, be resold, transferred, or re-exported to any party not eligible to receive U.S. commodities, software, and technical data.

To the maximum extent permitted by applicable law, Bourns disclaims (i) any and all liability for special, punitive, consequential, incidental or indirect damages or lost revenues or lost profits, and (ii) any and all implied warranties, including implied warranties of fitness for particular purpose, non-infringement and merchantability.

For your convenience, copies of this Legal Disclaimer Notice with German, Spanish, Japanese, Traditional Chinese and Simplified Chinese bilingual versions are available at:

Web Page: http://www.bourns.com/legal/disclaimers-terms-and-policies

PDF: http://www.bourns.com/docs/Legal/disclaimer.pdf