chanhvinh.com

Data Sheet: Auto Transformers Type SAT

Description ..... : Auto transformer

Manufactured to..... : VDE 0550

Test voltage ..... : Input/Output - Ground 2500 V, 50 Hz

Short-circuit protection ..... : Fuse protection on output

Construction ..... : Encapsulated in plastic housing

Protection class ..... : protection class I

Protection index ..... : IP 20

Max ambient temperature .... : + 40 °C

Insulation class of the
insulation system..... : A

Input voltage..... : 230 V

Frequency ..... : 50 - 60 Hz

Output voltage..... : 115 V

Input Connector..... : Approx. 2m flexible 3 core cable with three pin plug to BS 1363

Output Connector..... : Approx. 1m flexible 3 core cable with three pin 15A/125V American socket

Mounting ..... : Provided with 4 fixing holes inthe terminal connection compartment

Packing..... : separately packed in cartons

Schematic plan :

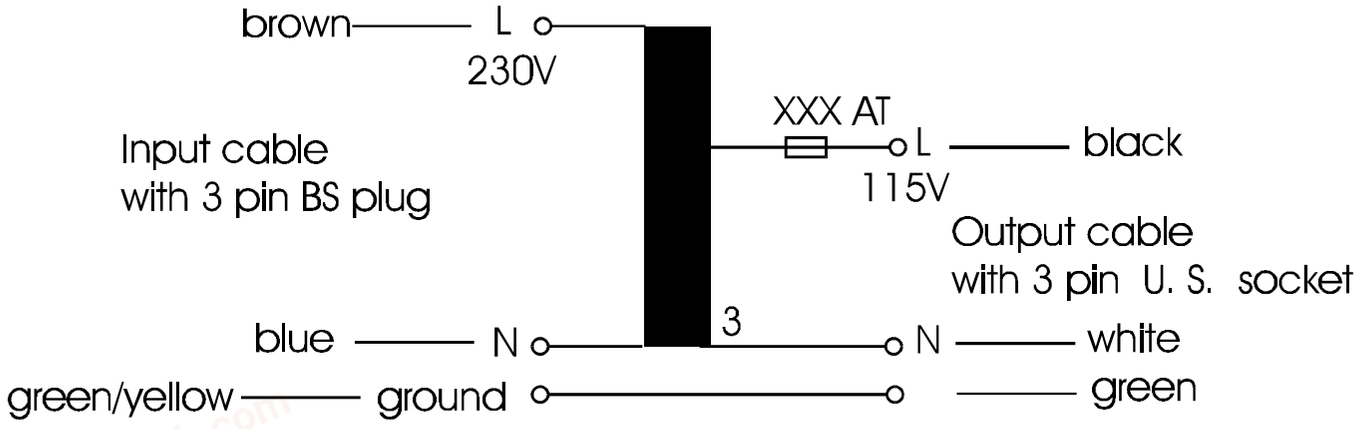

Description:

The SAT type transformers are auto wound, step down transformers for portable applications. Fully encapsulated in a fully insulated flame retardant plastic enclosure. The input is provided with approximately two metres of flexible three core cable and three pin plug to BS 1363. The output is with approximately one metre of flexible three core cable fitted with a three pin U.S.A style 15A/125V socket as standard. The output is protected by a 5 x 20mm fuse link of which the replacement must not exceed the stated rating. There are four mounting holes located in the wiring compartment, for permanent installation where required.

Note: These transformers provide no isolation from the mains.

chanhvinh.com

Output power 100 VA Type SAT 100
Height 76 mm Weight 1900 g
Ground area 166 mm x 77 mm

Input Voltage (V)..... 230
Output Voltage (V)..... 115
Output Current (A)..... 0,869
Output fuse rating (Time - Lag).... 0,8
No load (active) power typ. 3W
Efficiency typ. 92 %

Output power 200 VA Type SAT 200
Height 76 mm Weight 2361 g
Ground area 166 mm x 77 mm

Input Voltage (V)..... 230
Output Load Voltage (V)..... 115
Output Current (A)..... 1,6
Output fuse rating (Time-Lag)..... 1,6
No load (active) power typ. 5,3 W
Efficiency typ. 95 %

SAT 100 / SAT 200

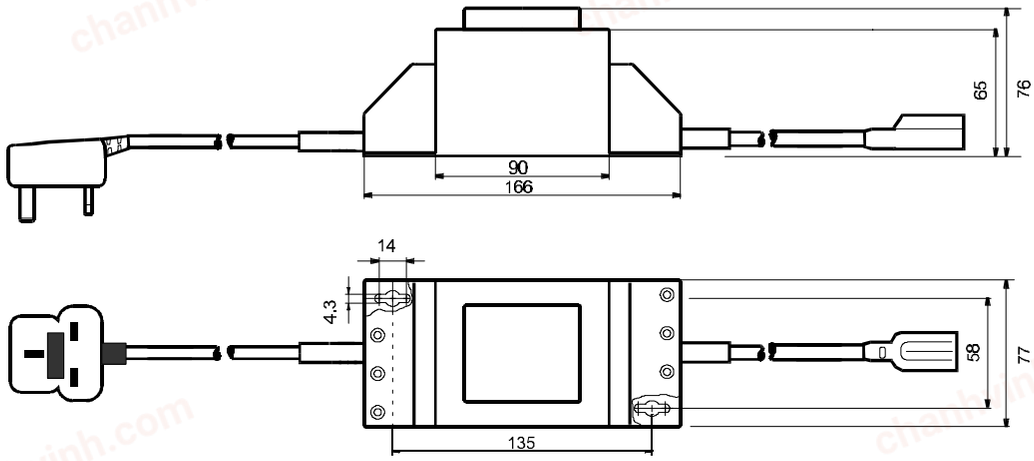

Output power 300 VA Type SAT 300
Height 97 mm Weight 3900 g
Ground area 223 mm x 117 mm

Input Voltage (V)..... 230
Output Voltage (V)..... 115
Output Current (A)..... 2,6
Output fuse rating (Time - Lag).... 2,5
No load (active) power typ. 6,5 W
Efficiency typ. 97 %

SAT 300

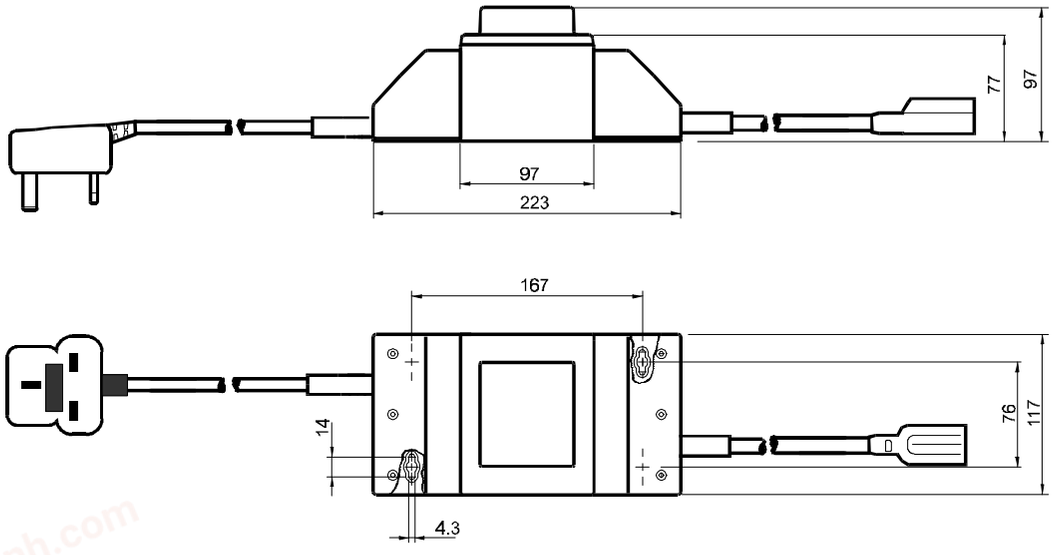

chanhvinh.com

Output power 500 VA Type SAT 500
Height 97 mm Weight 5150 g
Ground area 223 mm x 117 mm

Input Voltage (V)..... 230
Output Voltage (V)..... 115
Output Current (A)..... 4,34
Output fuse rating (Time - Lag).... 4,0
No load (active) power typ. 9W
Efficiency typ. 97 %

Output power 600 VA Type SAT 600
Height 97 mm Weight 5150 g
Ground area 223 mm x 117 mm

Input Voltage (V)..... 230
Output Voltage (V)..... 115
Output Current (A)..... 5,21
Output fuse rating (Time-Lag)..... 5,0
No load (active) power typ. 6W
Efficiency typ. 97 %

SAT 500 / SAT 600

