chanhvinh.com

SURFACE MOUNT LED GREEN, 0805 PACKAGE

BIVAR

SM0805UGC

- **Industry Standard 0805 Package**
- **RoHS Compliant**
- **Small Package and Footprint**
- **Water Clear Lens**
- **Wide Viewing Angle**
- **Ideal for Status Indication, Display, and Backlighting**

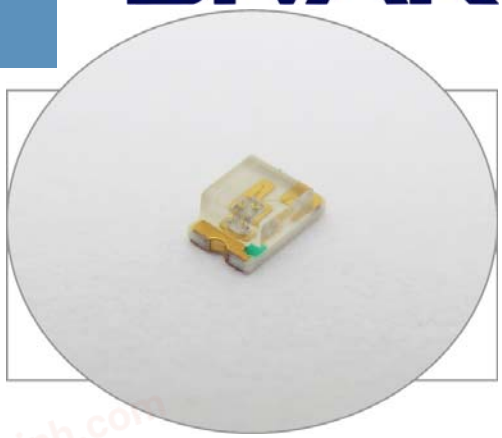

Bivar Surface Mount 0805 package LED may be used in nearly any lighting or indication application. The miniature package is ideal for small scale applications such as general indication and backlighting. Low power consumption and excellent long life reliability are suitable for battery powered equipment. Bivar offers water clear LED lens for maximum luminous intensity. Wide variety of wavelength and intensity combinations are available to meet any illumination need. The SM0805 LED is packaged in standard tape and reels for pick and place assemblies.

Part Number	Material	Emitted Color	Peak Wavelength λp(nm) TYP.	Lens Appearance	Luminous Intensity (mcd) TYP.	Viewing Angle
SM0805UGC	GaP	GREEN	563	Water Clear	10	130°

Outline Dimensions

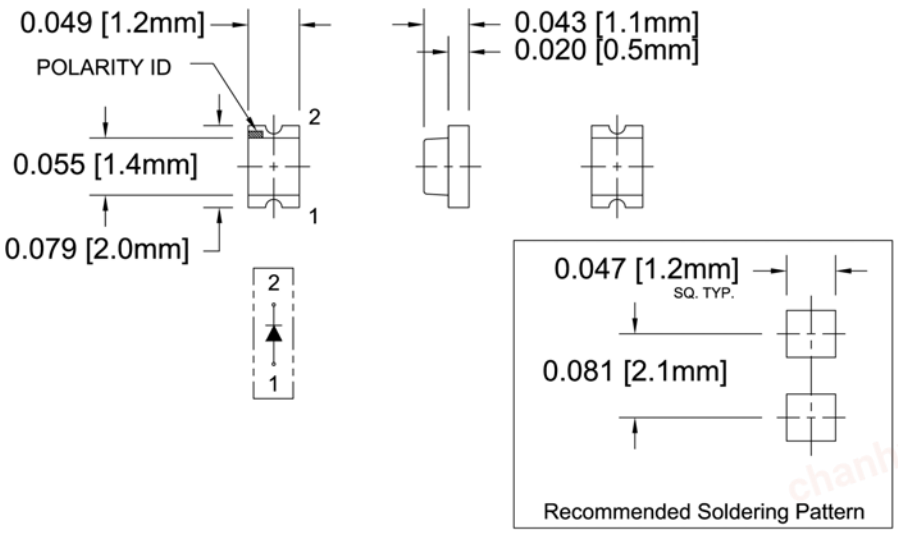

Outline Drawings Notes:
1. All dimensions are in inches [millimeters].
2. Standard tolerance: ±0.010" unless otherwise noted.

ATTENTION OBSERVE PRECAUTIONS FOR HANDLING ELECTROSTATIC SENSITIVE DEVICES

RoHS Compliant

Moisture Sensitivity Level 4

Bivar reserves the right to make changes at any time without notice.

chanhvinh.com

BIVAR

Absolute Maximum Ratings

T_A = 25°C unless otherwise noted

Power Dissipation	78 mW
Forward Current (DC)	30 mA
Peak Forward Current [1]	100 mA
Reverse Voltage	5 V
Operating Temperature Range	-30 ~ +80°C
Storage Temperature Range	-40 ~ +85°C
Lead Soldering Temperature (3 mm from the base of the epoxy bulb) [2]	260°C

Notes: 1. 10% Duty Cycle, Pulse Width ≤ 0.1 msec. 2. Solder time less than 5 seconds at temperature extreme.

Electrical / Optical Characteristics

T_A = 25°C & I_F = 20 mA unless otherwise noted

Part Number	Forward Voltage (V)[1]			Recommend Forward Current (mA)			Reverse Current (μA)	Dominant Wavelength (nm)[2]			Luminous Intensity Iv (mcd)			Viewing Angle 2 Θ ½ (deg)
	MIN	TYP	MAX	MIN	TYP	MAX	MAX	MIN	TYP	MAX	MIN	TYP	MAX	TYP
SM0805UGC	/	2.0	2.6	/	20	/	10	/	565	/	3	10	/	130

Notes: 1. Tolerance of forward voltage : ±0.05V. 2. Tolerance of dominant wavelength : ±1.0nm.

Bivar reserves the right to make changes at any time without notice.

chanhvinh.com

SURFACE MOUNT LED
GREEN, 0805 PACKAGE

Typical Electrical / Optical Characteristics

T_A = 25°C unless otherwise noted

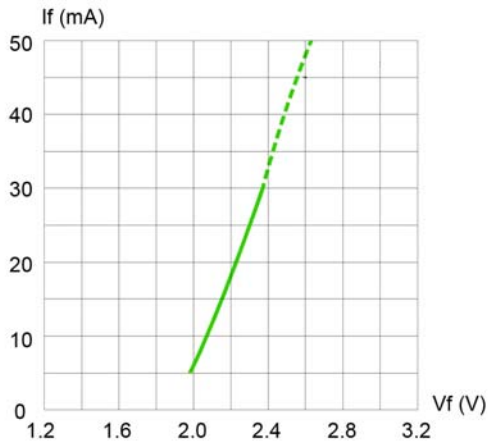

Fig. 1 Forward Current vs. Forward Voltage

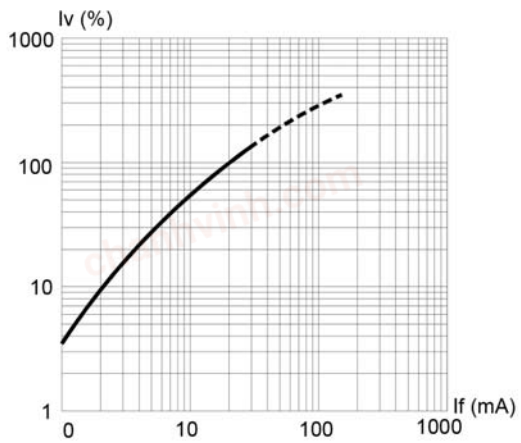

Fig. 2 Relative Luminous Intensity vs. Forward Current

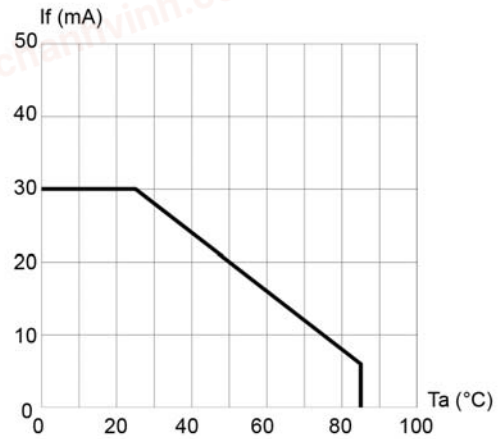

Fig. 3 Forward Current vs. Temperature

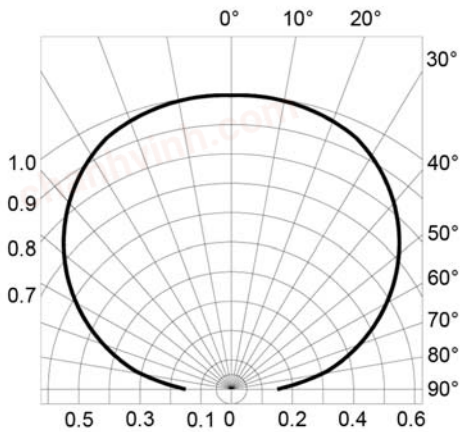

Fig. 4 Directivity Radiation Diagram

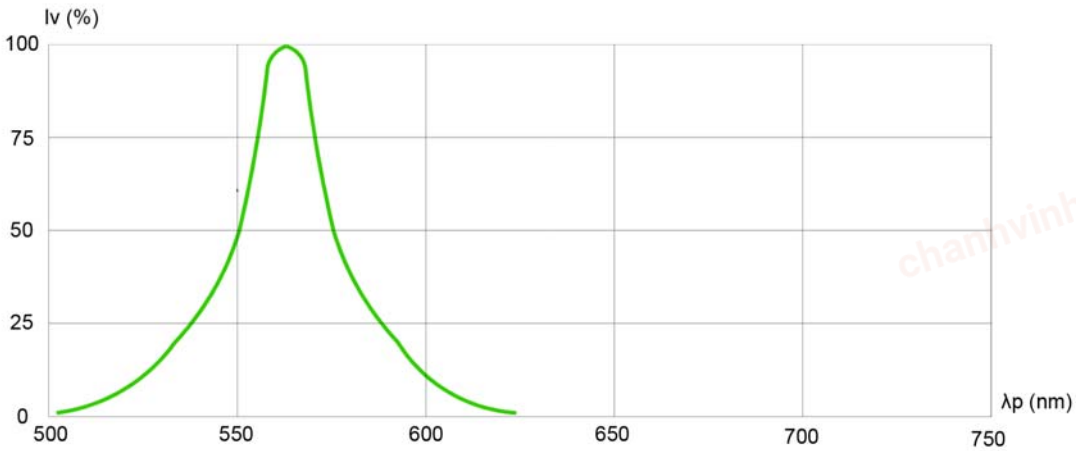

Fig. 5 Relative Luminous Intensity vs. Peak Wavelength

Bivar reserves the right to make changes at any time without notice.

chanhvinh.com

SURFACE MOUNT LED
GREEN, 0805 PACKAGE

Recommended Soldering Conditions

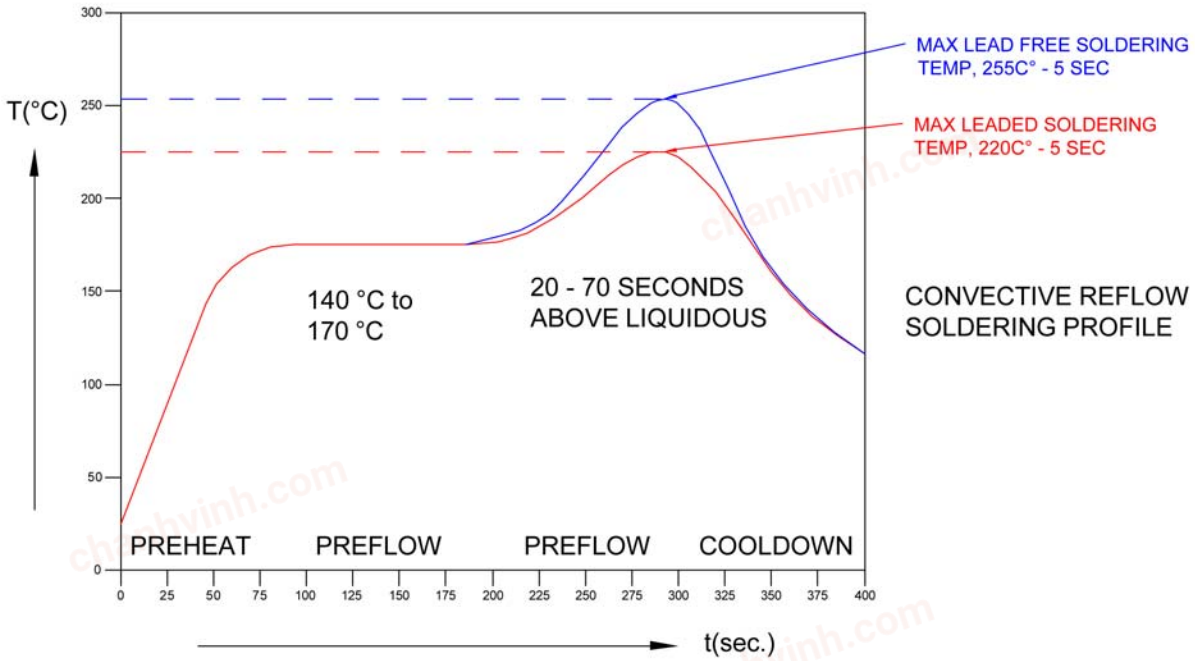

Tape and Reel Dimensions

Note: 3000 pcs/Reel

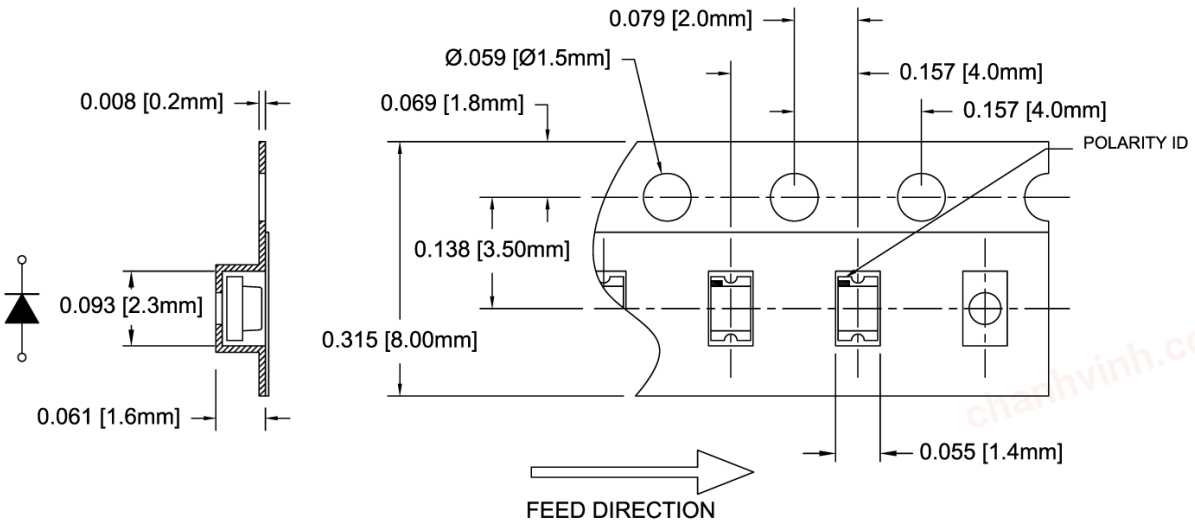

Outline Drawings Notes:
1. All dimensions are in inches [millimeters].
2. Standard tolerance: ±0.010" unless otherwise noted.

chanhvinh.com

SURFACE MOUNT LED
GREEN, 0805 PACKAGE

BIVAR

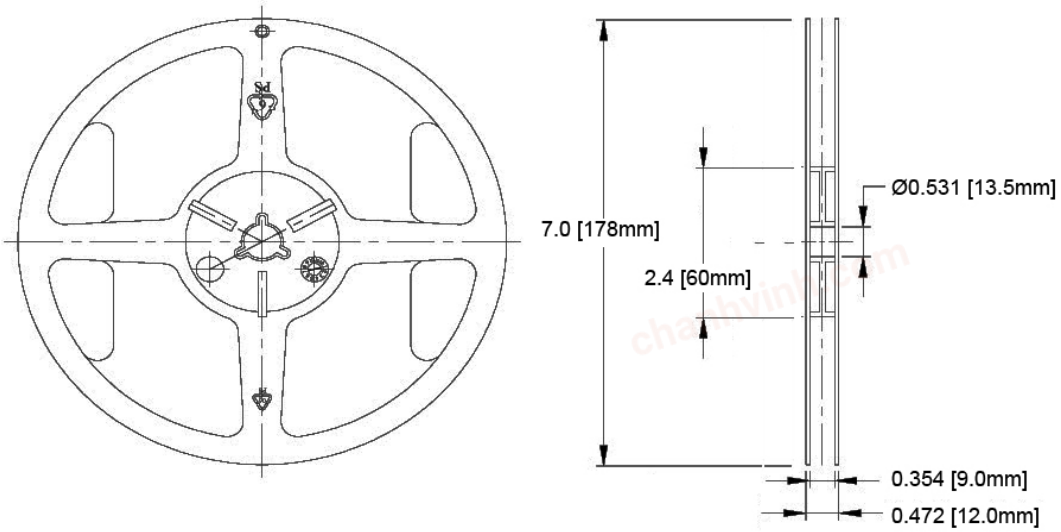

Outline Drawings Notes:
1. All dimensions are in inches [millimeters].
2. Standard tolerance unless otherwise noted: X.XXX ± 0.010"
   X.X ± 0.1"

Packaging and Labeling Plan

Note: 1 Reel / Bag

Vacuum and Heat Sealed
Clear AntiStatic Poly Bag

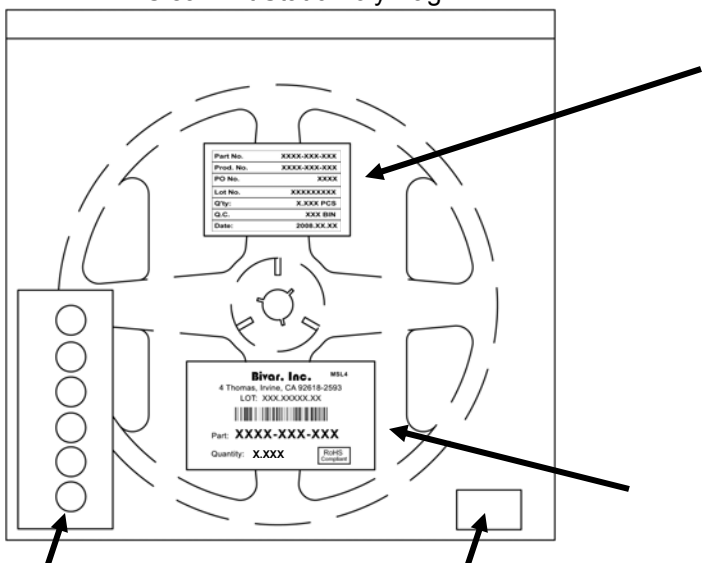

Humidity Indicator Card

Desiccant

Part No.	XXXX-XXX-XXX
Prod. No.	XXXX-XXX-XXX
PO No.	XXXX
Lot No.	XXXXXXXXX
Q'ty:	X.XXX PCS
Q.C.	XXX BIN
Date:	2008.XX.XX

Internal Quality Control

Bivar, Inc. MSL4
4 Thomas, Irvine, CA 92618-2593
LOT: XXX.XXXXX.XX
Part: **XXXX-XXX-XXX**
Quantity: **X.XXX**
RoHS Compliant

Bivar Standard Packaging Label

Bivar reserves the right to make changes at any time without notice.