chanhvinh.com

| REV. | DESCRIPTION | DATE | APPROVED |
|---|---|---|---|
| E | Engineering Update w/o Changes | 02/26/04 | M. C. |
| F | Material Update. | 11/10/05 | M. C. |
| | | | |
| | | | |
| | | | |

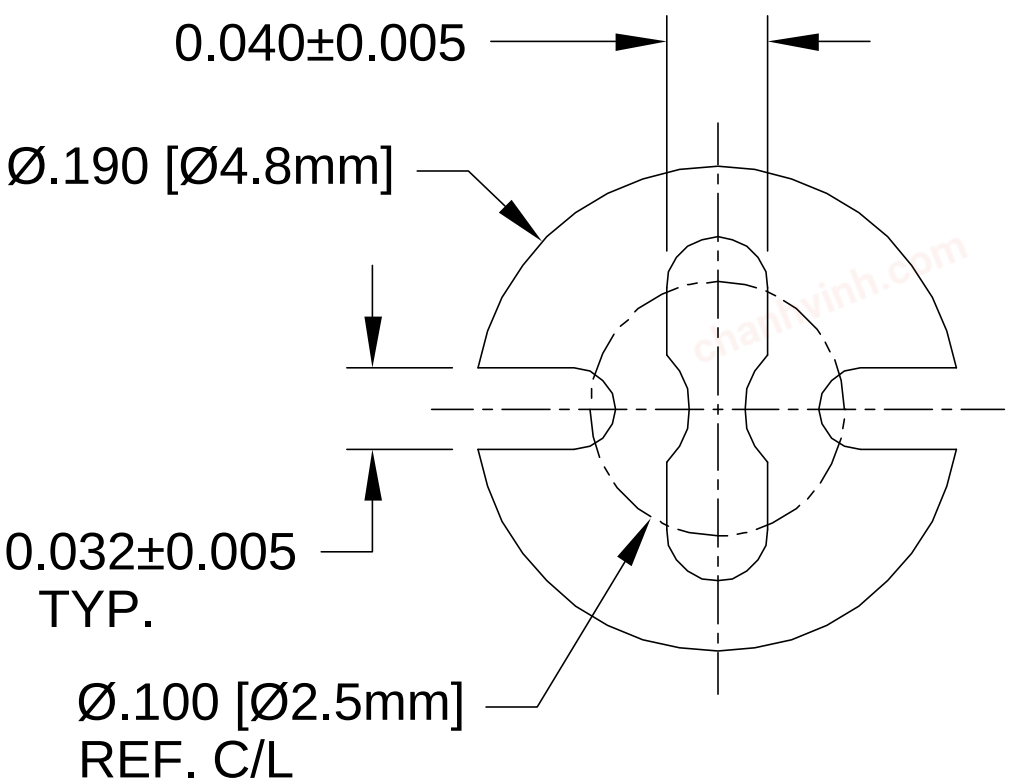


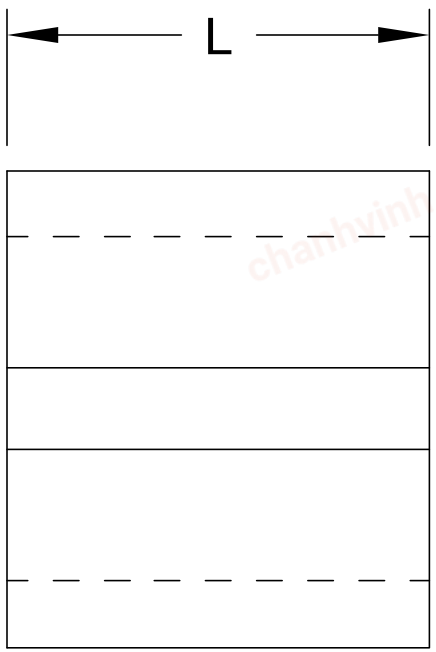


3. TOLERANCE "L" DIMENSION:
   0.030 - 0.500 (1.0 - 12.7mm)±0.005(0.1mm)
   0.505 - 0.750 (12.8 - 19.1mm)±0.008(0.2mm)
   0.755 - 1.250 (19.2 - 31.8mm)±0.015(0.4mm)
2. MATERIAL: PVC ALLOY, 94V-0, BLACK. BIVAR MATERIAL CODE 58-BK.
   CYBERTECH CYBERSHIELD PVC ALLOY, CS1534WX-BLK02N BLACK.
1. GENERAL SPECIFICATIONS: BIVAR EXTRUDED PRODUCT SPECIFICATION BV00-E105.

STANDARD TOLERANCE
( UNLESS OTHERWISE SPECIFIED )

| DECIMALS | | ANGULAR | |
|---|---|---|---|
| .X | ± .1 | X° | ± 1° |
| .XX | ± .01 | | |
| .XXX | ± .005 | | |

BIVAR®
4 THOMAS, IRVINE, CA. 92618
TEL: (949) 951-8808 FAX: (949) 951-3974

TITLE: EXTRUDED, SELF-RETAINING LED MOUNT

| DESIGNED: | DATE: | PART NO: | REVISION: |
|---|---|---|---|
| Shane Irving | 02/03/98 | ELM 2 | F |
| CHECKED: M. Chen | DATE: 12/17/02 | CAGE CODE : 32559 | SHEET # 1 OF 1 |

CAD GENERATED DOCUMENT, DO NOT MEASURE DRAWING.