chanhvinh.com

PET2000-12-074xA

AC-DC Front-End Power Supply

PET2000-12-074xA is a 2000 Watt AC to DC, power-factor corrected (PFC) power supply that converts standard AC power into a main output of +12 VDC.
PET2000-12-074xA utilizes full digital control architecture for greater efficiency, control and functionality.
This power supply meets international safety standards and displays the CE-Mark for the European Low Voltage Directive (LVD).



RoHS Compliant

Key Features & Benefits

- Best-in-class, 80 PLUS Certified “Platinum” Efficiency
- Auto-Selected Input Voltage Ranges: 90 - 140 VAC, 180 - 264 VAC
- AC Input with Power Factor Correction
- 2000 W Continuous Output Power Capability
- Always-On 12 V Standby Output
- Hot-Plug Capable
- Parallel Operation with Active Current Sharing
- Full Digital Controls for Improved Performance
- High Density Design: 42.1 W/in^3
- Small Form Factor: 265 x 73.5 x 40 mm (10.43 x 2.89 x 1.57 in)
- Power Management Bus Communication Protocol for Control, Programming
  and Monitoring
- Status LED with Fault Signaling

Applications

- Networking Switches
- Servers & Routers
- Telecommunications

Please read our datasheet & drawing disclaimer here.

chanhvinh.com

1. ORDERING INFORMATION

PET	2000	-	12	-	074	x	A	
Product Family	**Power Level**	**Dash**	**V1 Output**	**Dash**	**Width**	**Airflow**	**Input**	**AC Inlet[1]**
PET Front-Ends	2000 W		12 V		74 mm	N: Normal R: Reverse	A: AC	Blank: C14 C: C16 A: Saf-D-Grid®

2. OVERVIEW

The PET2000-12-074xA AC/DC power supply is a fully DSP controlled, highly efficient front-end power supply. It incorporates resonance-soft-switching technology to reduce component stresses, providing increased system reliability and very high efficiency. With a wide input operational voltage range the PET2000-12-074xA maximizes power availability in demanding server, network, and other high availability applications. The supply is fan cooled and ideally suited for integration with a matching airflow path.
The PFC stage is digitally controlled using a state-of-the-art digital signal processing algorithm to guarantee best efficiency and unity power factor over a wide operating range.
The DC/DC stage uses soft switching resonant techniques in conjunction with synchronous rectification. An active OR-ing device on the output ensures no reverse load current and renders the supply ideally suited for operation in redundant power systems.
The always-on standby output provides power to external power distribution and management controllers. It is protected with an active OR-ing device for maximum reliability.
Status information is provided with a front-panel LED. In addition, the power supply can be controlled and the fan speed set via the I2C bus. The I2C bus allows full monitoring of the supply, including input and output voltage, current, power, and inside temperatures. Cooling is managed by a fan controlled by the DSP controller. The fan speed is adjusted automatically depending on the actual power demand and supply temperature and can be overridden through the I²C bus.

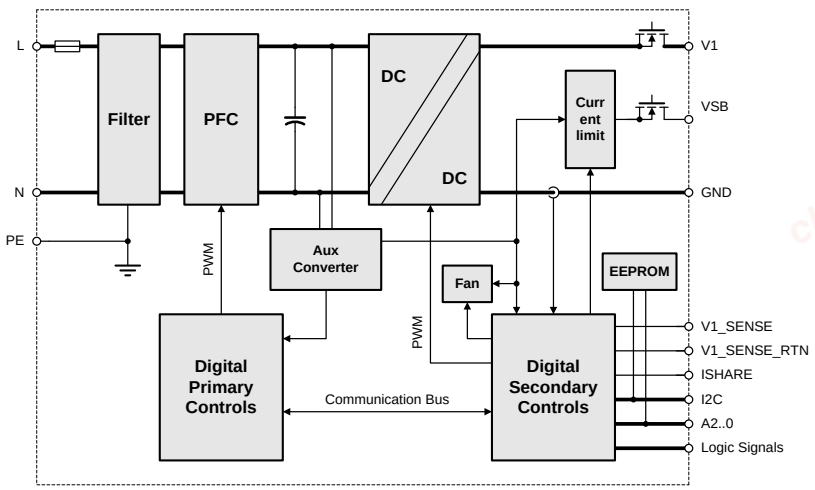

Figure 1. PET2000-12-074xA Block Diagram

3. ABSOLUTE MAXIMUM RATINGS

Stresses in excess of the absolute maximum ratings may cause performance degradation, adversely affect long-term reliability and cause permanent damage to the supply.

PARAMETER		CONDITIONS / DESCRIPTION	MIN	MAX	UNITS
Vi maxc	Maximum Input	Continuous		264	VAC

[1] C14 = IEC 60320-C14 type, C16 = IEC 60320-C16 type, Saf-D-Grid® = Anderson Saf-D-Grid®

chanhvinh.com

4. INPUT

General Condition: T_A = 0… 55 °C, unless otherwise noted.

PARAMETER		DESCRIPTION / CONDITION	MIN	NOM	MAX	UNIT
$V_{i\,nom}$	Nominal Input Voltage	Rated Voltage High Line ($V_{i\,nom\,HL}$)	200	230	240	VAC
		Rated Voltage Low Line ($V_{i\,nom\,LL}$)	100	115	127	VAC
V_i	Input Voltage Ranges	Normal operating ($V_{i\,min\,HL}$ to $V_{i\,max\,HL}$), High Line	180		264	VAC
		Normal operating ($V_{i\,min\,LL}$ to $V_{i\,max\,LL}$), Low Line	90		140	VAC
$I_{i\,max}$	Maximum Input Current	V_i=100 VAC, I_1= 83 A, I_{SB}= 5 A			13	A_{RMS}
		V_i= 200 VAC, I_1=167 A, I_{SB}= 5 A			12	
		V_i= 200 VAC, I_1 = 145 A, I_{SB}= 5 A			10	
		V_i= 220 VAC, I_1= 158 A, I_{SB}= 5 A			10	
		V_i= 230 VAC, I_1= 167 A, I_{SB}= 5 A			10	
$I_{i\,inrush}$	Inrush Current Limitation	$V_{i\,min}$ to $V_{i\,max}$, T_{NTC}= 25°C, 5 ms			10	A_p
f_i	Input Frequency		47	50/60	63	Hz
PF	Power Factor	V_i= 230 VAC, 10% load	0.8	0.880		W/VA
		V_i= 230 VAC, 20% load	0.9	0.950		W/VA
		V_i= 230 VAC, 50% load	0.9	0.997		W/VA
		V_i= 230 VAC, 100% load	0.95	0.999		W/VA
THD	Total Harmonic Distortion	TBD			TBD	%
$V_{i\,on}$	Turn-on Input Voltage[2]	Ramping up	87		90	VAC
$V_{i\,off}$	Turn-off Input Voltage[2]	Ramping down	82		87	VAC
η	Efficiency[3]	V_i= 230 VAC, 10% load	90	91.6		%
		V_i= 230 VAC, 20% load	91	93.8		%
		V_i= 230 VAC, 50% load	94	94.4		%
		V_i= 230 VAC, 100% load	91	92.8		%
$T_{V1\,holdup}$	Hold-up Time V_1	V_i= 230 VAC, 50% load, 0°	18			ms
		V_i= 230 VAC, 100% load, 0°	9			ms
$T_{VSB\,holdup}$	Hold-up Time V_{SB}	V_i= 90 to 264 VAC, 0 to 100% load	70			ms

4.1 INPUT CONNECTOR

PET2000-12-074NA power supply is available in 3 different input connector configurations. The versions with IEC 60320-C14 and IEC 60320-C16 have a limited current of 10 A for areas outside North America, in addition the IEC 60320-C14 has a limited component temperature of 70°C. The Anderson Saf-D-Grid® has no limitation with respect to both current and temperature.
The PET2000-12-074NA power supply is available with IEC 60320-C14.

Below table shows the maximum rated operating conditions for the different input connector options. The applied operating condition must remain within these conditions to allow safety compliant operation.
See also 10.3 MAXIMUM OUTPUT POWER VERSUS INLET TEMPERATURE FOR SAFETY COMPLIANCY for detailed derating curves.

[2] The Front-End is provided with a minimum hysteresis of 3 V during turn-on and turn-off within the ranges
[3] Efficiency measured without fan power per EPA server guidelines

© 2023 Bel Power Solutions

chanhvinh.com

TYPE	INPUT CONNECTOR	REGION	APPLIED RATED MAINS AC VOLTAGE[4]	MAX I [5]	MAXIMUM DERATED I_1 AT MAXIMUM T_A
PET2000-12-074RA	IEC 60320-C14	North America	100 to 127 VAC	83.3 A	50 A at T_A = 55°C
			200 to 240 VAC	167 A	100 A at T_A = 55°C
		Other than North America	100 to 127 VAC	67 A / 83.3 A for BSMI	50 A at T_A = 55°C
			200 to 220 VAC	145 A	100 A at T_A = 55°C
			220 to 230 VAC	158 A	100 A at T_A = 55°C
			230 to 240 VAC	167 A	100 A at T_A = 55°C
PET2000-12-074NA	IEC 60320-C14	North America	100 to 127 VAC	83.3 A	50 A at T_A = 70°C
			200 to 240 VAC	167 A	100 A at T_A = 70°C
		Other than North America	100 to 127 VAC	67 A / 83.3 A for BSMI	17.5 A at T_A = 65°C
			200 to 220 VAC	145 A	32.5 A at T_A = 65°C
			220 to 230 VAC	158 A	40 A at T_A = 65°C
			230 to 240 VAC	167 A	43 A at T_A = 65°C
PET2000-12-074NAC	IEC 60320-C16	North America	100 to 127 VAC	83.3 A	50 A at T_A = 70°C
			200 to 240 VAC	167 A	100 A at T_A = 70°C
		Other than North America	100 to 127 VAC	67 A / 83.3 A for BSMI	40 A at T_A = 70°C
			200 to 220 VAC	145 A	87 A at T_A = 70°C
			220 to 230 VAC	158 A	95 A at T_A = 70°C
			230 to 240 VAC	167 A	100 A at T_A = 70°C
PET2000-12-074NAA	Anderson Saf-D-Grid®	All	100 to 127 VAC	83.3 A	50 A at T_A = 70°C
			200 to 240 VAC	167 A	100 A at T_A = 70°C

4.2 INPUT FUSE

Time-lag 16 A input fuse (5 x 20 mm) in series with the L-line inside the power supply protects against severe defects. The fuse is not accessible from the outside and is therefore not a serviceable part.

4.3 INRUSH CURRENT

The AC-DC power supply exhibits an X-capacitance of only 5.9 µF, resulting in a low and short peak current, when the supply is connected to the mains. The internal bulk capacitor will be charged through an NTC which will limit the inrush current.

NOTE:

Do not repeat plug-in / out operations within a short time, or else the internal in-rush current limiting device (NTC) may not sufficiently cool down and excessive inrush current or component failure(s) may result.

4.4 INPUT UNDER-VOLTAGE

If the sinusoidal input voltage stays below the input undervoltage lockout threshold Vi on, the supply will be inhibited. Once the input voltage returns within the normal operating range, the supply will return to normal operation again.

[4] Nominal grid voltage, does not include typical fluctuations of ±10%; e.g. listed range 230-240 VAC allows operation at 230 VAC -10% to 240 VAC +10%, so 207 … 264 VAC actual voltage to account for grid fluctuations

[5] Maximum Input current for PET2000-12-074RA at T_A = 40°C and for PET2000-12-074NAx at T_A = 55°C

chanhvinh.com

4.5 POWER FACTOR CORRECTION

Power factor correction (PFC) is achieved by controlling the input current waveform synchronously with the input voltage. A fully digital controller is implemented giving outstanding PFC results over a wide input voltage and load ranges. The input current will follow the shape of the input voltage. If for instance the input voltage has a trapezoidal waveform, then the current will also show a trapezoidal waveform.

4.6 EFFICIENCY

High efficiency (see *Figure 2)* is achieved by using state-of-the-art silicon power devices in conjunction with soft-transition topologies minimizing switching losses and a full digital control scheme. Synchronous rectifiers on the output reduce the losses in the high current output path. The speed of the fan is digitally controlled to keep all components at an optimal operating temperature regardless of the ambient temperature and load conditions.

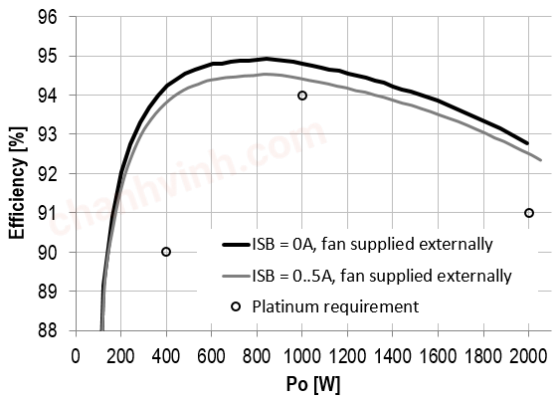

Figure 2. Efficiency vs. Load current (ratio metric loading)

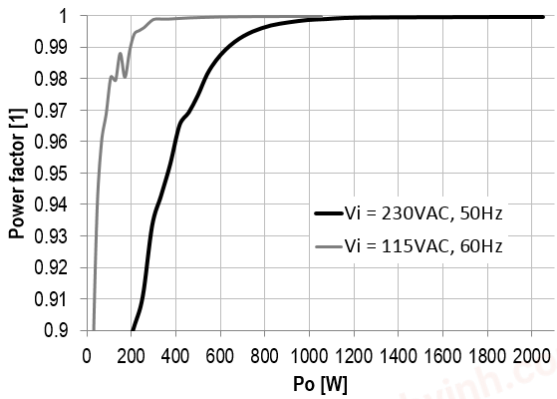

Figure 3. Power factor vs. Load current

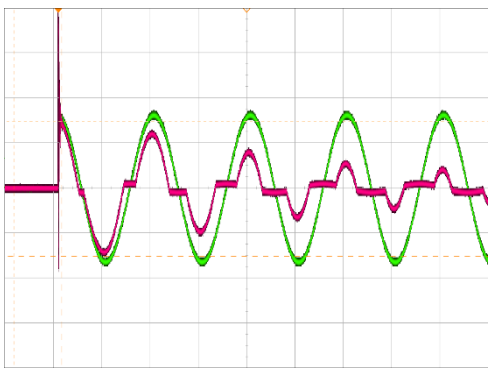

Figure 4. Inrush current, V_i = 230Vac, 90°
CH2: V_i (200V/div), CH3: I_i (5A/div)

© 2023 Bel Power Solutions

chanhvinh.com

5. OUTPUT

5.1 MAIN OUTPUT V_1

General Condition: T_A = 0…40 °C (PET2000-12-074RA), T_A = 0…55 °C (PET2000-12-074NA), Vi = 230 VAC unless otherwise noted.

PARAMETER		DESCRIPTION / CONDITION	MIN	NOM	MAX	UNIT
$V_{1\ nom}$	Nominal Output Voltage	0.5 · $I_{1\ nom}$, T_A = 25°C		12.0		VDC
$V_{1\ set}$	Output Setpoint Accuracy		-0.5		+0.5	% $V_{1\ nom}$
$dV_{1\ tot}$	Static Regulation	$V_{i\ min\ LL}$ to $V_{i\ max\ HL}$, 0 to 100% $I_{1\ nom}$	-1		+1	% $V_{1\ nom}$
$P_{1\ nom}$	Nominal Output Power[6]	$V_{i\ min\ HL}$ to $V_{i\ max\ HL}$		2000		W
		$V_{i\ min\ LL}$ to $V_{i\ max\ LL}$		1000		W
$P_{1\ peak}$	Peak Output Power[6]	$V_{i\ min\ HL}$ to $V_{i\ max\ HL}$		2100		W
		$V_{i\ min\ LL}$ to $V_{i\ max\ LL}$		1320		W
$I_{1\ nom}$	Output Current	$V_{i\ min\ HL}$ to $V_{i\ max\ HL}$	0		167	ADC
$I_{1\ nom\ red}$		$V_{i\ min\ LL}$ to $V_{i\ max\ LL}$	0		83	ADC
$I_{1\ peak}$	Peak Output Current[7]	$V_{i\ min\ HL}$ to $V_{i\ max\ HL}$	0		175	ADC
$I_{1\ peak\ red}$		$V_{i\ min\ LL}$ to $V_{i\ max\ LL}$	0		110	ADC
$V_{1\ pp}$	Output Ripple Voltage[8]	$V_{i\ min\ LL}$ to $V_{i\ max\ HL}$, 0 to 75% $I_{1\ nom}$, C_{ext} = 0 mF			120	mVpp
		$V_{i\ min\ LL}$ to $V_{i\ max\ HL}$, 75 to 100% $I_{1\ nom}$, C_{ext} = 0 mF			150	mVpp
		$V_{i\ min\ LL}$ to $V_{i\ max\ HL}$, 0 to 100% $I_{1\ nom}$, C_{ext} ≥ 1 mF/Low ESR			120	mVpp
$dV_{1\ load}$	Load Regulation	0 to 100% $I_{1\ nom}$	-83	-110	-138	mV
$dV_{1\ line}$	Line Regulation	$V_{i\ min\ HL}$ to $V_{i\ max\ HL}$, 0.5 · $I_{1\ nom}$	-24	0	24	mV
$dV_{1\ temp}$	Thermal Drift	0.5 · $I_{1\ nom}$, T_A = 0 ... 55°C		-0.4		mV/°C
$dI_{1\ share}$	Current Sharing	Difference between individual I_1, 1 … 8 power supplies in parallel	-6		+6	ADC
V_{ISHARE}	Current Share Bus Voltage	V_{ISHARE} at 167A		8		VDC
V_{ISHARE}	Current Share Bus Voltage	$I_{1\ peak}$		9.14		VDC
$dV_{1\ lt}$	Load Transient Response	ΔI = 50% $I_{1\ nom}$, I_1 = 5 … 100% $I_{1\ nom}$, C_{ext} = 0 mF		0.35	0.6	VDC
$dV_{1\ lt}$		ΔI = 10% $I_{1\ nom}$, I_1 = 0 … 10% $I_{1\ nom}$, C_{ext} = 0 mF		0.35	0.6	VDC
t_{rec}	Recovery Time	dI/dt = 1A/µs, recovery within 1% of $V_{1\ nom}$		0.5	1	ms
$V_{1\ dyn}$	Dynamic Load Regulation	ΔI = 60% $I_{1\ nom}$, I_1 = 5 … 167 A, f = 50 ... 5000 Hz, Duty cycle = 10 ... 90%, C_{ext} = 2 ... 30 mF	11.4		12.6	V
$t_{V1\ rise}$	Output Voltage Rise Time	V_1 = 10…90% $V_{1\ nom}$, C_{ext} < 10 mF	1		30	ms
$t_{V1\ ovr\ sh}$	Output Turn-on Overshoot	0 to 100% $I_{1\ nom}$			0.6	V
$dV_{1\ sense}$	Remote Sense	Compensation for cable drop, 0 to 100% $I_{1\ nom}$			0.25	V
$C_{V1\ load}$	Capacitive Loading		0		30	mF

[6] See also chapter TEMPERATURE AND FAN CONTROL
[7] Peak combined power for all outputs must not exceed 2100 W; maximum of peak power duration is 20 seconds without asserting the SMBAlert signal
[8] Measured with a 10 uF low ESR capacitor in parallel with a 0.1 uF ceramic capacitor at the point of measurement

chanhvinh.com

5.2 STANBY OUTPUT V_{SB}

General Condition: T_A = 0…40 °C (PET2000-12-074RA), T_A = 0…55 °C (PET2000-12-074NA), Vi = 230 VAC unless otherwise noted.

PARAMETER		DESCRIPTION / CONDITION		MIN	NOM	MAX	UNIT
$V_{SB\ nom}$	Nominal Output Voltage	I_{SB} = 0 A, T_A = 25°C			12.1		VDC
$V_{SB\ set}$	Output Setpoint Accuracy			-1		+1	%V_{SBnom}
$dV_{SB\ tot}$	Total Regulation	$V_{i\ min\ LL}$ to $V_{i\ max\ HL}$, 0 to 100% $I_{SB\ nom}$		-5		+1	%V_{SBnom}
$P_{SB\ nom}$	Nominal Output Power	$V_{i\ min\ LL}$ to $V_{i\ max\ HL}$	PET2000-12-074RA PET2000-12-074NA		36 60		W W
$P_{SB\ peak}$	Peak Output Power[8]	$V_{i\ min\ LL}$ to $V_{i\ max\ HL}$	PET2000-12-074RA PET2000-12-074NA		36 60		W
$I_{SB\ nom}$	Output Current	$V_{i\ min\ LL}$ to $V_{i\ max\ HL}$	PET2000-12-074RA PET2000-12-074NA	0		3 5	ADC
$I_{SB\ peak}$	Peak Output Current[9]	$V_{i\ min\ LL}$ to $V_{i\ max\ HL}$	PET2000-12-074RA PET2000-12-074NA	0		3.3 5.3	ADC
$V_{SB\ pp}$	Output Ripple Voltage[7]	$V_{i\ min\ LL}$ to $V_{i\ max\ HL}$, 0 to 100% $I_{SB\ nom}$, C_{ext} = 0 mF				120	mVpp
$dV_{SB\ load}$	Load Regulation	0 to 100% $I_{SB\ nom}$	PET2000-12-074RA PET2000-12-074NA	-144 -290	-240 -430	-330 -570	mV mV
$dV_{SB\ line}$	Line Regulation	$V_{i\ min\ HL}$ to $V_{i\ max\ HL}$, $I_{SB\ nom}$ = 0 A		-24	0	24	mV
$dV_{SB\ temp}$	Thermal Drift	I_{SB} = 0 A			-0.5		mV/°C
$dI_{SB\ share}$	Current Sharing	Deviation from $I_{SB\ tot}$ / N, I_{SB} = 0.5 · $I_{SB\ nom}$		-1		+1	ADC
$V_{SB\ dyn}$	Load Transient Response	ΔI_{SB} = 50% $I_{SB\ nom}$, I_{SB} = 5 … 100% $I_{SB\ nom}$, dI_{SB}/dt = 1A/µs, recovery within 1% of $V_{SB\ nom}$			0.2	0.3	VDC
t_{rec}	Recovery Time				1	2	ms
$V_{SB\ dyn}$	Dynamic Load Regulation	ΔI_{SB} = 1A, I_{SB} = 0 … $I_{SB\ nom}$, f = 50 ... 5000 Hz, Duty cycle = 10 ... 90%, C_{ext} = 0 ... 5 mF		11.4		12.6	V
$t_{VSB\ rise}$	Output Voltage Rise Time	V_{SB} = 10…90% $V_{SB\ nom}$, C_{ext} < 1 mF		1	2	5	ms
$t_{VSB\ ovr\ sh}$	Output Turn-on Overshoot	0 to 100% $I_{SB\ nom}$				0.6	V
$C_{VSB\ load}$	Capacitive Loading			0		3100	µF

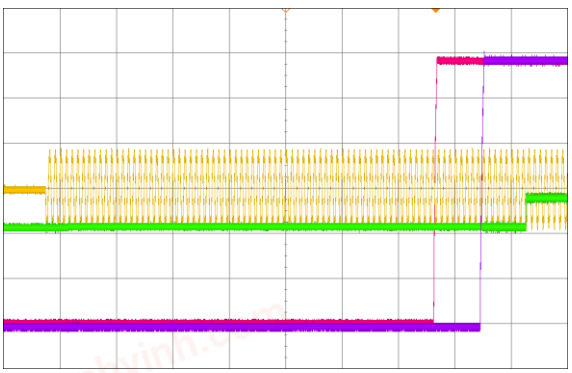

Figure 5. Turn-On AC Line 230VAC, full load (200ms/div)
CH1: Vin (400V/div) CH2: PWOK_H (5V/div)
CH3: V_1 (2V/div) CH4: V_{SB} (2V/div)

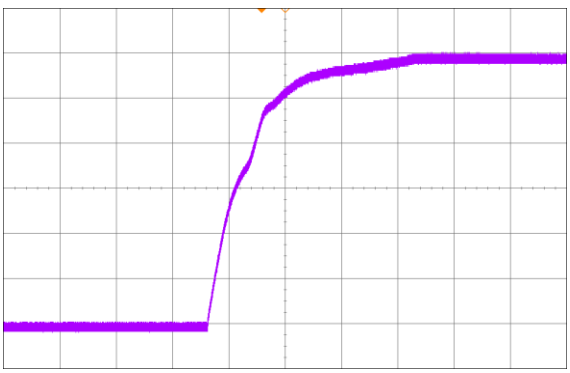

Figure 6. Rise time V_1 at 230VAC, full load (2ms/div)
CH3: V_1 (2V/div)

[9] In single power supply configuration

© 2023 Bel Power Solutions

chanhvinh.com

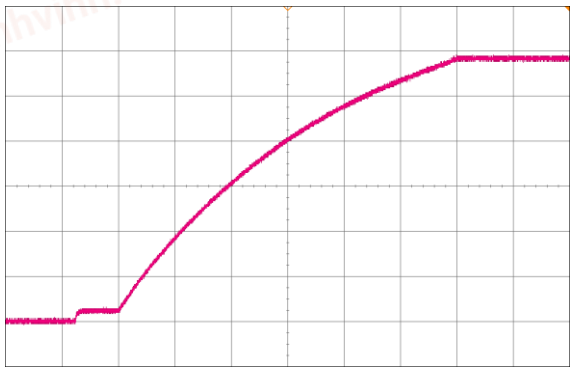

Figure 7. Rise time V_{SB} at 230VAC, full load (2ms/div)
CH4: V_{SB} (2V/div)

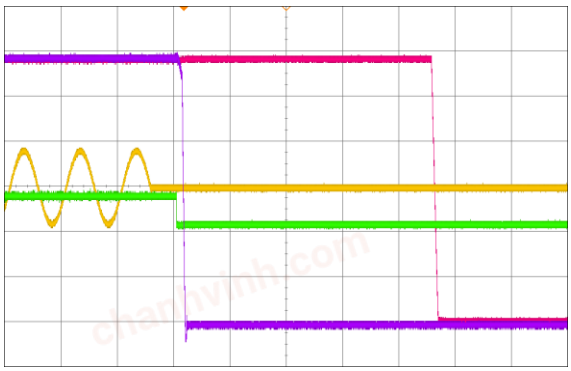

Figure 8. Turn-Off AC Line 230VAC, full load (20ms/div)
CH1: Vin (400V/div) CH2: PWOK_H (5V/div)
CH3: V_1 (2V/div) CH4: V_{SB} (2V/div)

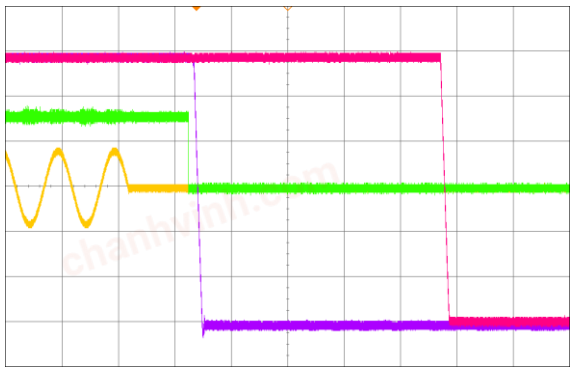

Figure 9. Turn-Off AC Line 230VAC, half load (20ms/div)
CH1: Vin (400V/div) CH2: PWOK_H (5V/div)
CH3: V_1 (2V/div) CH4: V_{SB} (2V/div)

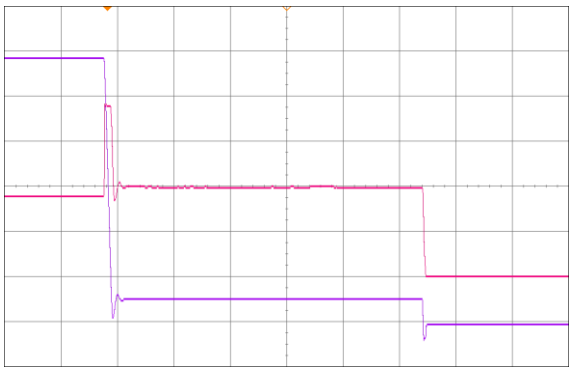

Figure 10. Short circuit on V1 (10ms/div)
CH3: V_1 (2V/div) CH4: I_1 (100A/div)

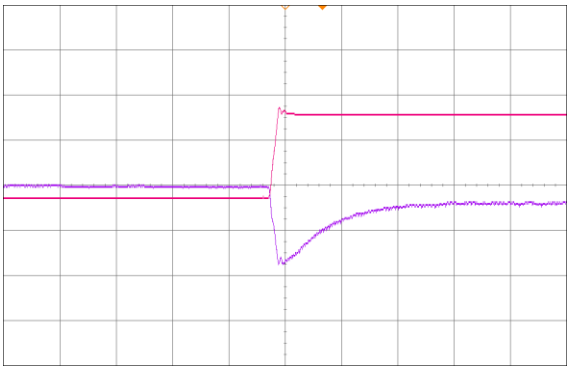

Figure 11. Load transient V_1, 83 to 167A (500µs/div)
CH3: V_1 (200mV/div) CH4: I_1 (50A/div)

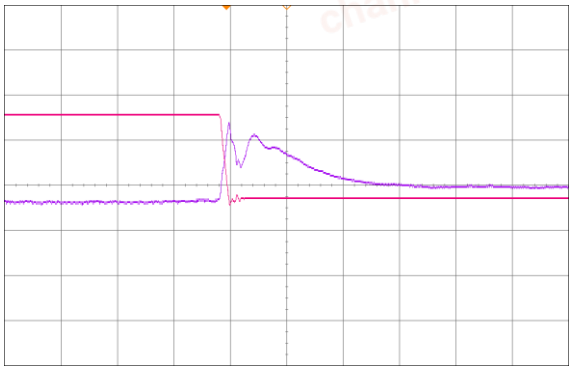

Figure 12. Load transient V_1, 167 to 83A (500µs/div)
CH3: V_1 (200mV/div) CH4: I_1 (50A/div)

5.3 OUTPUT GROUND / CHASSIS CONNECTION

The output return path serves as power and signal ground. All output voltages and signals are referenced to these pins. To prevent a shift in signal and voltage levels due to ground wiring voltage drop a low impedance ground plane should be used as shown in *Figure 13*. Alternatively, separated ground signals can be used as shown in

Figure 14. In this case the two ground planes should be connected together at the power supplies ground pins.

chanhvinh.com

NOTE:
Within the power supply the output GND pins are connected to the Chassis, which in turn is connected to the Protective Earth terminal on the AC inlet. Therefore, it is not possible to set the potential of the output return (GND) to any other than Protective Earth potential.

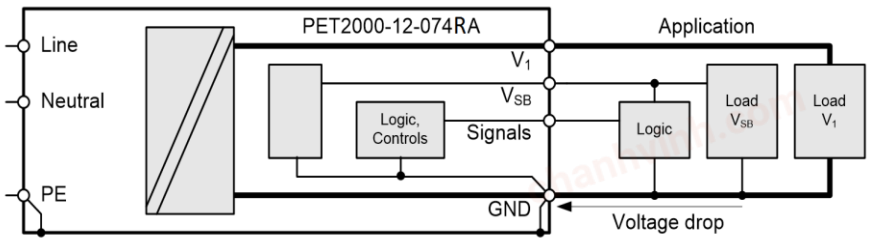

Figure 13. Common low impedance ground plane

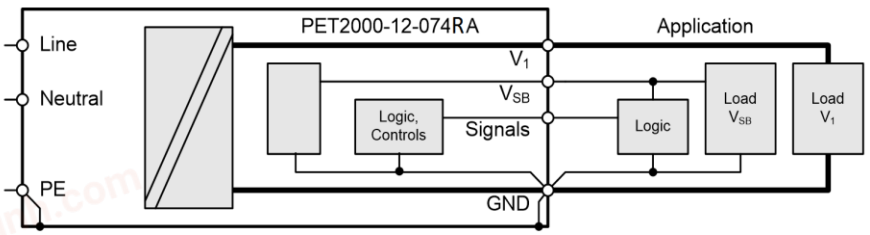

Figure 14. Separated power and signal ground

6. PROTECTION

PARAMETER		DESCRIPTION / CONDITION	MIN	NOM	MAX	UNIT
F	Input fuse (L)	Not use accessible, time-lag (T)		16		A
$V_{1\ OV}$	OV Threshold V_1	Over Voltage V_1 Protection, Latch-off Type	13.3	13.9	14.5	VDC
$t_{V1\ OV}$	OV Trip Time V_1				1	ms
$V_{SB\ OV}$	OV Threshold V_{SB}	Over Voltage V_1 Protection, Automatic retry each 1s	13.3	13.9	14.5	VDC
$t_{VSB\ OV}$	OV Trip Time V_{SB}				1	ms
$I_{1\ OC\ Slow}$	OC Limit V_1	Over Current Limitation, Latch-off, $V_{i\ min\ HL}$ to $V_{i\ max\ HL}$	169		175	ADC
		Over Current Limitation, Latch-off, $V_{i\ min\ LL}$ to $V_{i\ max\ LL}$	85		88	ADC
$t_{V1\ OC\ Slow}$	OC Trip time V_1	Over Current Limitation, Latch-off time	20			s
$I_{V1\ OC\ Fast}$	Fast OC Limit V_1	Fast Over Current Limit., Latch-off, $V_{i\ min\ HL}$ to $V_{i\ max\ HL}$	176		180	ADC
		Fast Over Current Limit., Latch-off, $V_{i\ min\ LL}$ to $V_{i\ max\ LL}$	110		115	ADC
$t_{V1\ OC\ Fast}$	Fast OC Trip time V_1	Fast Over Current Limitation, Latch-off time	50	55	60	ms
$I_{1\ SC}$	Max Short Circuit Current V_1	$V_1 < 3$ V			180	A
$t_{V1\ SC}$	Short Circuit Regulation Time	$V_1 < 3$ V, time until I_1 is limited to $< I_{1\ sc}$			2	ms
$I_{SB\ OC}$	OC Limit V_{SB}	Over Current Limitation, Constant-Current Type	5.2		7.5	A
$t_{VSB\ OC}$	OC Trip time V_{SB}	Over Current Limit., time until I_{SB} is limited to $I_{SB\ OC}$			1	ms
T_{SD}	Over Temperature	See chapter 10.2				°C

© 2023 Bel Power Solutions

chanhvinh.com

6.1 OVERVOLTAGE PROTECTION

PET2000-12-074xA front-end provides a fixed threshold overvoltage (OV) protection implemented with a HW comparator for both the main and the standby output. Once an OV condition has been triggered on the main output, the supply will shut down and latch the fault condition. The latch can be unlocked by disconnecting the supply from the AC mains or by toggling the PSON_L input. The standby output will continuously try to restart with a 1 s interval after OV condition has occurred.

6.2 UNDERVOLTAGE DETECTION

Both main and standby outputs are monitored. LED and PWOK_H pin signal if the output voltage exceeds ±5% of its nominal voltage.
The main output will latch off if the main output voltage V_1 falls below 10 V (typically in an overload condition) for more than 55 ms. The latch can be unlocked by disconnecting the supply from the AC mains or by toggling the PSON_L input.
If the standby output leaves its regulation bandwidth for more than 2 ms then the main output is disabled to protect the system.

6.3 CURRENT LIMITATION

MAIN OUTPUT

The main output exhibits a substantially rectangular output characteristic controlled by a software feedback loop. If output current exceeds $I_{V1\ OC\ Fast}$ it will reduce output voltage in order to keep output current at $I_{V1\ OC\ Fast}$. If the output voltage drops below ~10.0 VDC for more than 55 ms, the output will latch off (standby remains on), see also *Undervoltage Detection.*

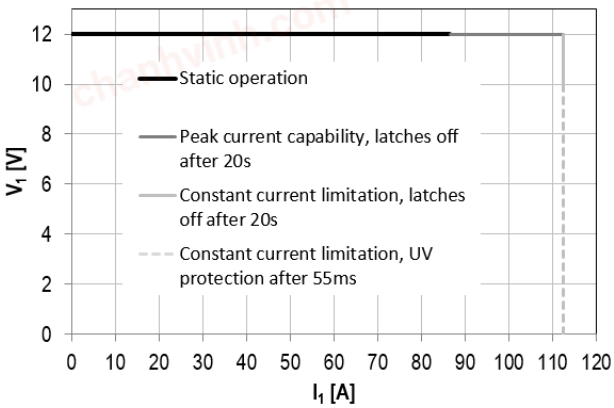

Figure 15. Current Limitation on V_1 at V_i = 90 ... 140 VAC

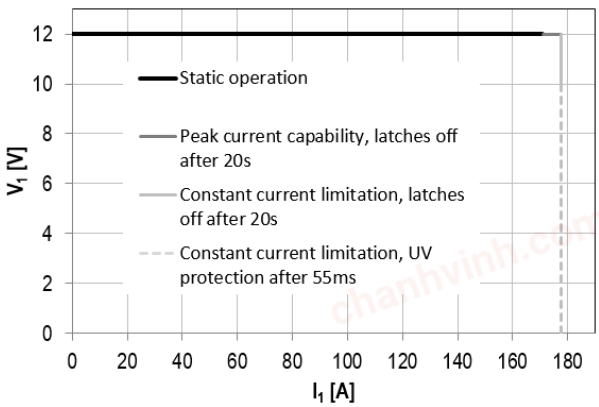

Figure 16 .Current Limitation on V_1 at V_i = 180 ... 264 VAC

A second SW controlled current limit will latch off the main output if the power supply is operated for long duration in its peak current capability region. This protection trips as soon as the output current exceeds $I_{1\ OC\ Slow}$ for a duration of more than 20 s.
The third current limitation implemented as a fast hardware circuit will immediately switch off the main output if the output current increases beyond the peak current trip point, occurring mainly if a short circuit is applied to the output voltage. The supply will re-start 4 ms later with a soft start, if the short circuit persists (V_1 < 10.0 V for >55 ms) the output will latch off; otherwise it continuous to operate.
The latch can be unlocked by disconnecting the supply from the AC mains or by toggling the PSON_L input.
The main output current limitation thresholds for $I_{1\ OC\ Slow}$ and $I_{1\ OC\ Fast}$ depend on the actual input voltage range applied to the power supply. In addition, the threshold for $I_{1\ OC\ Slow}$ is reduced when ambient temperature exceeds 55°C, see *Figure 38* for PET2000-12-074RA and *Figure 46* for PET2000-12-074NA.

STANDBY OUTPUT

The standby output exhibits a substantially rectangular output characteristic down to 0 V (no hiccup mode / latch off).
The current limitation of the standby output is independent of the AC input voltage.
Running in current limitation causes the output voltage to fall, this will trigger under voltage protection and disables the main output, see also *Undervoltage Detection.*

chanhvinh.com

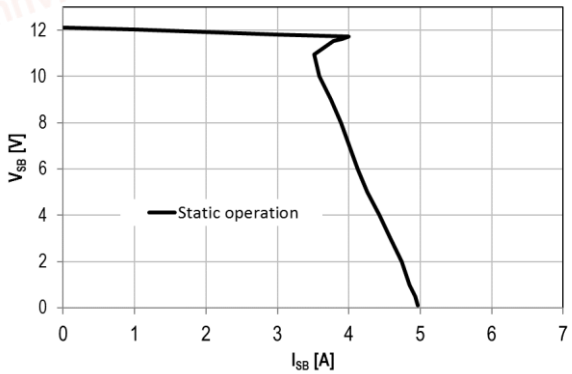

PET2000-12-074RA

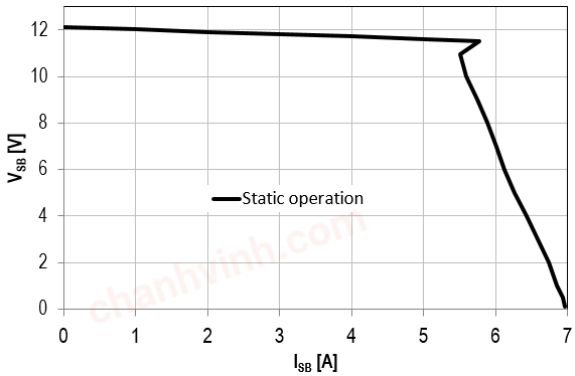

PET2000-12-074NA

Figure 17. Current Limitation on V_{SB}

7. MONITORING

The power supply operating parameters can be accessed through I²C interface. For more details refer to chapter I2C / POWER MANAGEMENT BUS COMMUNICATION and document URP.00234 (PET Front-End Power Management Bus Communication Manual).

PARAMETER		DESCRIPTION / CONDITION	MIN	NOM	MAX	UNIT
$V_{i\,mon}$	Input RMS Voltage	$V_{i\,min\,LL} \le V_i \le V_{i\,max\,HL}$	-3		+3	VAC
$I_{i\,mon}$	Input RMS Current	$I_i > 6.7$ Arms	-3		+3	%
		$I_i \le 6.7$ Arms	-0.2		+0.2	Arms
$P_{i\,mon}$	True Input Power	$P_i > 500$ W	-4		+4	%
		50 W < $P_i \le 500$ W	-20		+20	W
$V_{1\,mon}$	V1 Voltage		-0.1		+0.1	VDC
$I_{1\,mon}$	V1 Current	$I_1 > 50$ A	-1		+1	%
		5 A < $I_1 \le 50$ A	-0.5		+0.5	ADC
$P_{1\,nom}$	V1 Output Power	$P_i > 1000$ W	-1		+1	%
		50 W < $P_i \le 1000$ W	-10		+10	W
$V_{SB\,mon}$	VSB Voltage		-0.1		+0.1	VDC
$I_{SB\,mon}$	VSB Current		-0.1		+0.1	ADC
$T_{A\,mon}$	Inlet Temperature	$T_{A\,min} \le T_A \le T_{A\,max}$	-2		+2	°C

© 2023 Bel Power Solutions

chanhvinh.com

8. SIGNALING AND CONTROL

8.1 ELECTRICAL CHARACTERISTICS

PARAMETER		DESCRIPTION / CONDITION	MIN	NOM	MAX	UNIT
PSON_H / HOTSTANDBYEN_H						
V_{IL}	Input Low Level Voltage	PSON_L: Main output enabled HOTSTANDBYEN_H: Hot Standby mode not allowed	-0.2		0.8	V
V_{IH}	Input High Level Voltage	PSON_L: Main output disabled HOTSTANDBYEN_H: Hot Standby mode allowed	2		3.5	V
$I_{IL,H}$	Maximum Input Sink or Source Current	V_I = -0.2 V to +3.5 V	-1		1	mA
$R_{pull\ up}$	Internal Pull up Resistor to internal 3.3 V			10		kΩ
R_{LOW}	Maximum external Pull down Resistance to GND to obtain Low Level				1	kΩ
R_{HIGH}	Minimum external Pull down Resistance to GND to obtain High Level		50			kΩ
PWOK_H						
V_{OL}	Output Low Level Voltage	V_1 or V_{SB} out of regulation, V_{Isink} < 4 mA	0		0.4	V
V_{OH}	Output High Level Voltage	V_1 and V_{SB} in regulation, I_{source} < 0.5 mA	2.4		3.5	V
$R_{pull\ up}$	Internal Pull up Resistor to internal 3.3 V			1		kΩ
I_{OL}	Maximum Sink Current	V_O < 0.4 V			4	mA

8.2 SENSE INPUTS

The main output has sense lines implemented to compensate for voltage drop on load wires in both positive and negative path. The maximum allowed voltage drop is 200 mV on the positive rail and 50 mV on the GND rail.
With open sense inputs the main output voltage will rise by 270 mV. Therefore, if not used, these inputs should be connected to the power output and GND at the power supply connector. The sense inputs are protected against short circuit. In this case the power supply will shut down.

8.3 CURRENT SHARE

The PET front-ends have an active current share scheme implemented for V_1. All the ISHARE current share pins need to be interconnected in order to activate the sharing function. If a supply has an internal fault or is not turned on, it will disconnect its ISHARE pin from the share bus. This will prevent dragging the output down (or up) in such cases.
The current share function uses an analog bus to transmit and receive current share information. The controller implements a Master/Slave current share function. The power supply providing the largest current among the group is automatically the Master. The other supplies will operate as Slaves and increase their output current to a value close to the Master by slightly increasing their output voltage. The voltage increase is limited to +250 mV.
The standby output uses a passive current share method (droop output voltage characteristic).

8.4 PSON_L INPUT

The PSON_L is an internally pulled-up (3.3 V) input signal to enable/disable the main output V_1 of the front-end. With low level input the main output is enabled. This active-low pin is also used to clear any latched fault condition. The PSON_L can be either controlled by an open collector device or by a voltage source.

chanhvinh.com

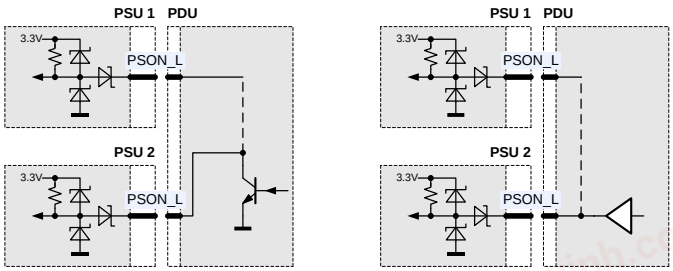

Figure 18. PSON_L connection

8.5 PWOK_H OUTPUT

The PWOK_H is an open drain output with an internal pull-up to 3.3 V indicating whether both V_{SB} and V_1 outputs are within regulation. This pin is active-high.
An external pull down resistor ensures low level when there is no power supply seated. When combining PWOK_H outputs of several power supplies, circuits as shown in *Figure 19* should be used.

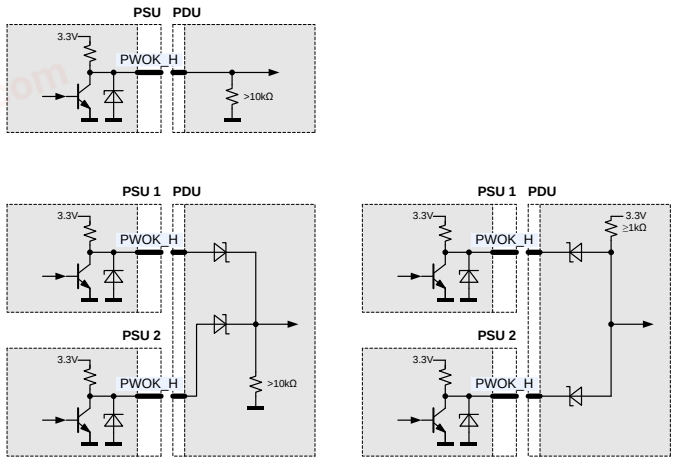

Figure 19. PWOK_H connection

8.6 HOT-STANDBY IN-/OUTPUT

The hot-standby operation is an operating mode allowing to further increase efficiency at light load conditions in a redundant power supply system. Under specific conditions one of the power supplies is allowed to disable its DC/DC stage. This will save the power losses associated with this power supply and at the same time the other power supply will operate in a load range having a better efficiency. In order to enable the hot standby operation, the HOTSTANDBYEN_H and the ISHARE pins need to be interconnected between the power supplies. A power supply will only be allowed to enter the hot-standby mode, when the HOTSTANDBYEN_H pin is high, the load current is low, see *Figure 20*, and the supply was allowed to enter the hot-standby mode by the system controller via the appropriate I²C command (by default disabled). The system controller needs to ensure that only one of the power supplies is allowed to enter the hot-standby mode.

If a power supply is in a fault condition, it will pull low its active-high HOTSTANDBYEN_H pin which indicates to the other power supply that it is not allowed to enter the hot-standby mode or that it needs to return to normal operation should it already have been in the hot-standby mode.

NOTE:

The system controller needs to ensure that only one of the power supplies is allowed to enter the hot-standby mode.

Figure 21 shows the achievable power loss savings when using the hot-standby mode operation. A total power loss reduction of approx. 10 W is achievable.

© 2023 Bel Power Solutions

chanhvinh.com

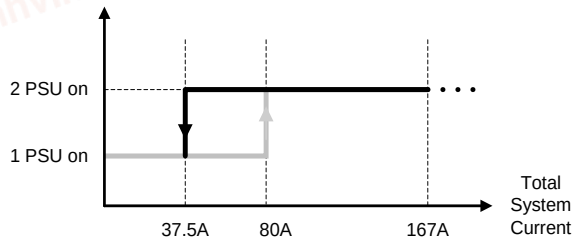

Figure 20. Hot-standby enable/disable current thresholds

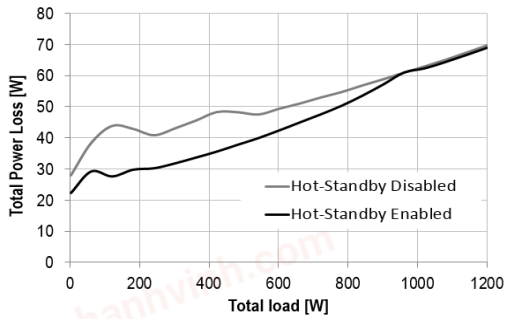

Figure 21. PSU power losses with/without hot-standby mode

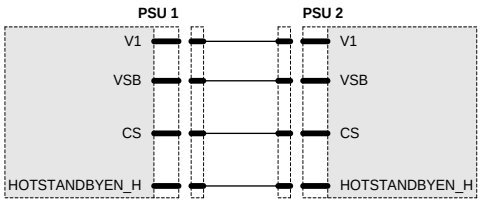

Figure 22. Recommended hot-standby configuration

8.7 PRESENT_L OUTPUT

The PRESENT_L pin is wired through a 100 Ohms resistor to internal GND within the power supply. This pin does indicate that there is a power supply present in this system slot. An external pull-up resistor has to be added within the application. Current into PRESENT_L should not exceed 5 mA to guarantee a low level voltage if power supply is seated.

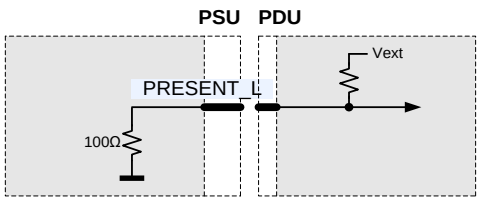

Figure 23. PRESENT_L connection

8.8 SIGNAL TIMING

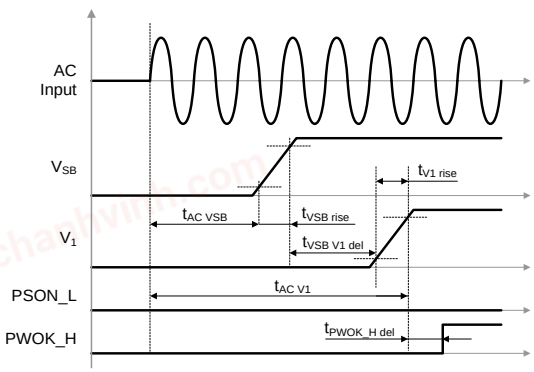

Figure 24. AC turn-on timing

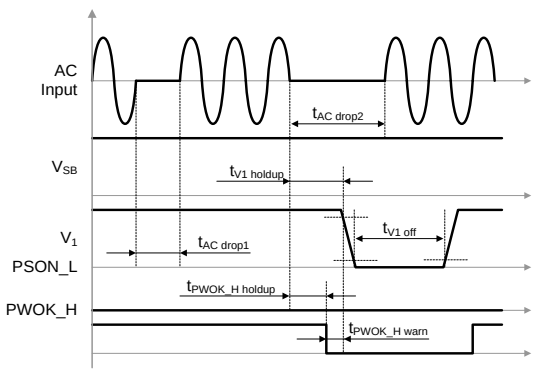

Figure 25. AC short dips

chanhvinh.com

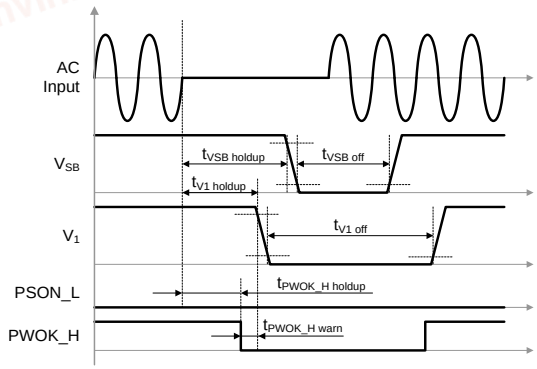

Figure 26. AC long dips

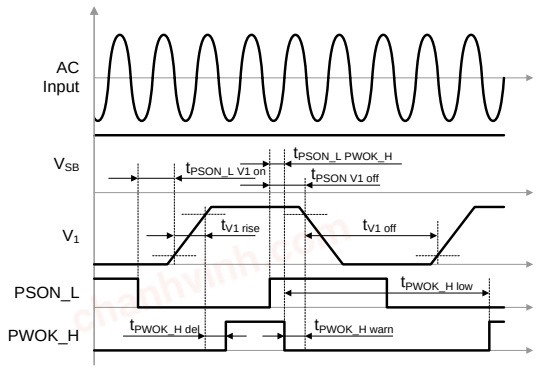

Figure 27. PSON_L turn-on/off timing

PARAMETER		DESCRIPTION / CONDITION	MIN	NOM	MAX	UNIT
$t_{AC\ VSB}$	AC Line to 90% V_{SB}				1.5	s
$t_{AC\ V1}$	AC Line to 90% V_1	PSON_L = Low		1.5	4 [10]	s
$t_{VSB\ V1\ del}$	V_{SB} to V_1 delay	PSON_L = Low	50	150	1000	ms
$t_{V1\ rise}$	V_1 rise time	See chapter *OUTPUT*				
$t_{VSB\ rise}$	V_{SB} rise time	See chapter *OUTPUT*				
$t_{AC\ drop1}$	AC drop without V_1 leaving regulation	0.5 · $I_{1\ nom}$, $I_{SB\ nom}$			17	ms
		0.7 · $I_{1\ nom}$, $I_{SB\ nom}$			13	ms
		$I_{1\ nom}$, $I_{SB\ nom}$			5	ms
$t_{AC\ drop2}$	AC drop without V_{SB} leaving regulation	$I_{1\ nom}$, $I_{SB\ nom}$			70	ms
$t_{V1\ holdup}$	Loss of AC to V_1 leaving regulation	See chapter *INPUT*				
$t_{VSB\ holdup}$	Loss of AC to V_{SB} leaving regulation	See chapter *INPUT*				
$t_{PWOK_H\ del}$	Outputs in regulation to PWOK_H asserted		100	150	200	ms
$t_{PWOK_H\ warn}$	Warning time from de-assertion of PWOK_H to V_1 leaving regulation		0.15			ms
$t_{PWOK_H\ holdup}$	Loss of AC to PWOK_H de-asserted	$V_{i\ nom\ HL}$, $I_{1\ nom}$, $I_{SB\ nom}$	10			ms
$t_{PWOK_H\ low}$	Time PWOK_H is kept low after being de-asserted		100			ms
$t_{PSON_L\ V1\ on}$	Delay PSON_L active to V_1 in regulation	C_{ext} = 0 mF	5	10	20	ms
$t_{PSON_L\ V1\ off}$	Delay PSON_L de-asserted to V_1 disabled		2	3	4	ms
$t_{PSON_L\ PWOK_H}$	Delay PSON_L de-asserted to PWOK_H de-asserted			1	2	ms
$t_{V1\ off}$	Time V_1 is kept off after leaving regulation			1		s
$t_{VSB\ off}$	Time V_{SB} is kept off after leaving regulation			1		s

[10] At repeated ON-OFF cycles the start-up times may increase by 1s

© 2023 Bel Power Solutions

chanhvinh.com

8.9 LED INDICATOR

The front-end has one front LED showing the status of the supply. The LED is bi-colored: green and amber, and indicates AC and DC power presence and warning or fault conditions. *Table 1* lists the different LED status.

OPERATING CONDITION [11]	LED SIGNALING
No AC or AC Line in UV condition, V_{SB} not present from paralleled power supplies	Off
PSON_L High Hot-Standby Mode	Blinking Green 1 Hz
No AC or AC Line in UV condition, V_{SB} present from paralleled power supplies V_1 or V_{SB} out of regulation Over temperature shutdown Output over voltage shutdown (V_1 or V_{SB}) Output over current shutdown (V_1 or V_{SB}) Fan error (>15%)	Solid Amber
Over temperature warning Minor fan regulation error (>5%, <15%)	Blinking Amber 1 Hz
Firmware boot loading in process	Blinking Green 2 Hz
Outputs V_1 and V_{SB} in regulation	Solid Green

Table 1. LED Status

9. I²C / POWER MANAGEMENT BUS COMMUNICATION

The PET front-end is a communication Slave device only; it never initiates messages on the I²C / SMBus by itself. The communication bus voltage and timing is defined in *Table 2* and further characterized through:

- The SDA/SCL IOs use 3.3 V logic levels
- External pull-up resistors on SDA/SCL required for correct signal edges
- Full SMBus clock speed of 100 kbps
- Clock stretching limited to 1 ms
- SCL low time-out of >25 ms with recovery within 10 ms
- Recognizes any time Start/Stop bus conditions

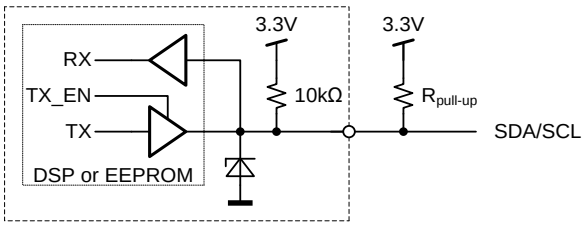

Figure 28. Physical layer of communication interface

Communication to the DSP or the EEPROM will be possible as long as the input AC voltage is provided. If no AC is present, communication to the unit is possible as long as it is connected to a life V_{SB} output (provided e.g. by the redundant unit). If only V_1 is provided, communication is not possible.

[11] The order of the criteria in the table corresponds to the testing precedence in the controller

chanhvinh.com

PARAMETER	DESCRIPTION	CONDITION	MIN	MAX	UNIT
SCL / SDA					
V_{iL}	Input low voltage		-0.5	1.0	V
V_{iH}	Input high voltage		2.3	3.5	V
V_{hys}	Input hysteresis		0.15		V
V_{oL}	Output low voltage	3 mA sink current	0	0.4	V
t_r	Rise time for SDA and SCL		$20+0.1C_b$[1]	300	ns
t_{of}	Output fall time ViHmin → ViLmax	10 pF < C_b[1] < 400 pF	$20+0.1C_b$[1]	250	ns
I_i	Input current SCL/SDA	0.1 VDD < Vi < 0.9 VDD	-10	10	µA
C_i	Internal Capacitance for each SCL/SDA			50	pF
f_{SCL}	SCL clock frequency		0	100	kHz
$R_{pull-up}$	External pull-up resistor	f_{SCL} ≤ 100 kHz		1000 ns / C_b[1]	Ω
t_{HDSTA}	Hold time (repeated) START	f_{SCL} ≤ 100 kHz	4.0		µs
t_{LOW}	Low period of the SCL clock	f_{SCL} ≤ 100 kHz	4.7		µs
t_{HIGH}	High period of the SCL clock	f_{SCL} ≤ 100 kHz	4.0		µs
t_{SUSTA}	Setup time for a repeated START	f_{SCL} ≤ 100 kHz	4.7		µs
t_{HDDAT}	Data hold time	f_{SCL} ≤ 100 kHz	0	3.45	µs
t_{SUDAT}	Data setup time	f_{SCL} ≤ 100 kHz	250		ns
t_{SUSTO}	Setup time for STOP condition	f_{SCL} ≤ 100 kHz	4.0		µs
t_{BUF}	Bus free time between STOP and START	f_{SCL} ≤ 100 kHz	5		ms

[1] Cb = Capacitance of bus line in pF, typically in the range of 10…400 pF

Table 2. I²C / SMBus Specification

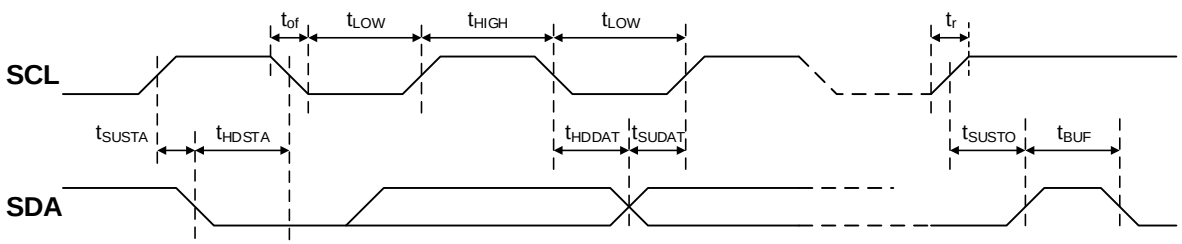

Figure 29. I²C / SMBus Timing

ADDRESS SELECTION

The address for I²C communication can be configured by pulling address input pins A2, A1 and A0 either to GND (Logic Low) or leave them open (Logic High). An internal pull up resistor will cause the A2 / A1 / A0 pin to be in High Level if left open. A fixed addressing offset exists between the Controller and the EEPROM.

© 2023 Bel Power Solutions

chanhvinh.com

A2	A1	A0	I2C Address[12]	
			Controller	EEPROM
0	0	0	0xB0	0xA0
0	0	1	0xB2	0xA2
0	1	0	0xB4	0xA4
0	1	1	0xB6	0xA6
1	0	0	0xB8	0xA8
1	0	1	0xBA	0xAA
1	1	0	0xBC	0xAC
1	1	1	0xBE	0xAE

Table 3. Address and protocol encoding

9.1 SMBALERT_L OUTPUT

The SMBALERT_L signal indicates that the power supply is experiencing a problem that the system agent should investigate. This is a logical OR of the Shutdown and Warning events. It is asserted (pulled Low) at Shutdown or Warning events such as reaching temperature warning/shutdown threshold of critical component, general failure, over-current, over-voltage, under-voltage or low-speed of a failed fan. This signal may also indicate the power supply is operating in an environment exceeding the specified limits.

The SMBAlert signal is asserted simultaneously with the LED turning to solid amber or blinking amber.

PARAMETER		DESCRIPTION / CONDITION	MIN	NOM	MAX	UNIT
SMB_ALERT_L						
V_{ext}	Maximum External Pull up Voltage				12	V
I_{OH}	Maximum High Level Leakage Current	No Failure or Warning condition, V_O = 12 V			10	µA
V_{OL}	Output Low Level Voltage	Failure or Warning condition, I_{sink} < 4 mA	0		0.4	V
$R_{pull\ up}$	Internal Pull up Resistor to internal 3.3 V			None		
I_{OL}	Maximum Sink Current	V_O < 0.4 V			4	mA

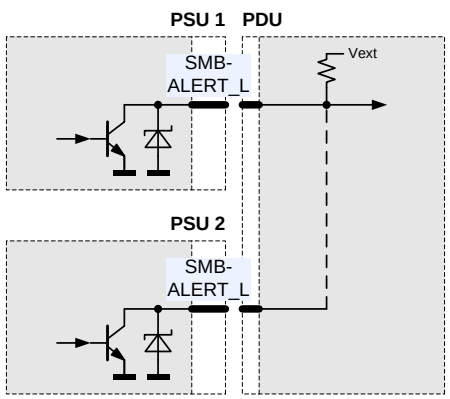

Figure 30. SMBALERT_L connection

[12] The LSB of the address byte is the R/W bit

chanhvinh.com

9.2 CONTROLLER AND EEPROM ACCESS

The controller and the EEPROM in the power supply share the same I²C bus physical layer (see *Figure 31*) and can be accessed under different addresses, see ADDRESS SELECTION.

The SDA/SCL lines are connected directly to the controller and EEPROM which are supplied by internal 3.3 V.

The EEPROM provides 256 bytes of user memory. None of the bytes are used for the operation of the power supply.

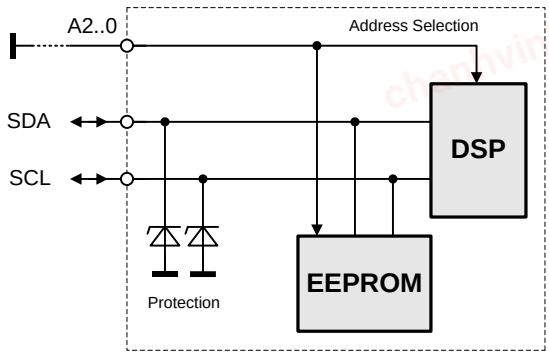

Figure 31. I²C Bus to DSP and EEPROM

9.3 EEPROM PROTOCOL

The EEPROM follows the industry communication protocols used for this type of device. Even though page write / read commands are defined, it is recommended to use the single byte write / read commands.

WRITE

The write command follows the “SMBus 1.1 Write Byte Protocol”. After the device address with the write bit cleared, the Two Byte Data Address is sent followed by the data byte and the STOP condition. A new START condition on the bus should only occur after 5ms of the last STOP condition to allow the EEPROM to write the data into its memory.

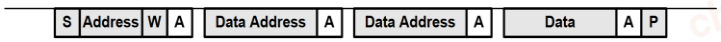

READ

The read command follows the “SMBus 1.1 Read Byte Protocol”. After the device address with the write bit cleared the two byte data address is sent followed by a repeated start, the device address and the read bit set. The EEPROM will respond with the data byte at the specified location.

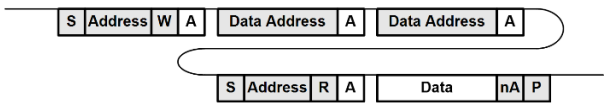

9.4 POWER MANAGEMENT BUS PROTOCOL

The Power Management Bus is an open standard protocol that defines means of communicating with power conversion and other devices. For more information, please see the System Management Interface Forum web site at: www.powerSIG.org.

Power Management Bus command codes are not register addresses. They describe a specific command to be executed. PET2000-12-074xA supply supports the following basic command structures:

- Clock stretching limited to 1 ms
- SCL low time-out of >25 ms with recovery within 10 ms
- Recognized any time Start/Stop bus conditions

© 2023 Bel Power Solutions

chanhvinh.com

WRITE

The write protocol is the SMBus 1.1 Write Byte/Word protocol. Note that the write protocol may end after the command byte or after the first data byte (Byte command) or then after sending 2 data bytes (Word command).

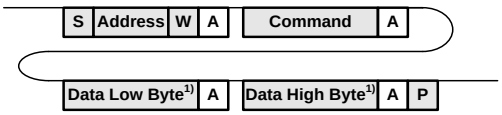

1) Optional

In addition, Block write commands are supported with a total maximum length of 255 bytes. See PET2000-12-074xA Power Management Bus Communication Manual URP.00234 for further information.

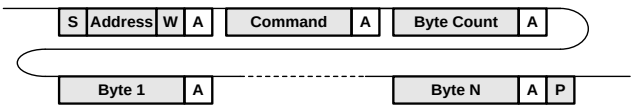

READ

The read protocol is the SMBus 1.1 Read Byte/Word protocol. Note that the read protocol may request a single byte or word.

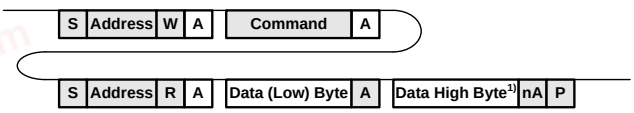

1) Optional

In addition, Block read commands are supported with a total maximum length of 255 bytes. See PET2000-12-074xA Power Management Bus Communication Manual URP.00234 for further information.

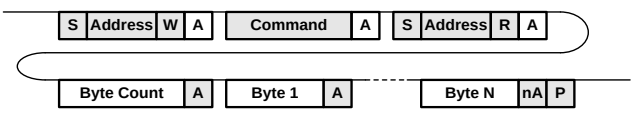

9.5 GRAPHICAL USER INTERFACE

Bel Power Solutions provides with its "I²C Utility" a Windows® XP/Vista/Win7 compatible graphical user interface allowing the programming and monitoring of the PET2000-12-074xA Front-End.
The utility can be downloaded on: belfuse.com/power-solutions and supports both the PSMI and Power Management Bus protocols.
The GUI allows automatic discovery of the units connected to the communication bus and will show them in the navigation tree. In the monitoring view the power supply can be controlled and monitored.
If the GUI is used in conjunction with the YTM.00046 Evaluation Board it is also possible to control the PSON_L pin of the power supply. Refer to BCG.00809 for YTM.00046 connection and GUI configuration.

chanhvinh.com

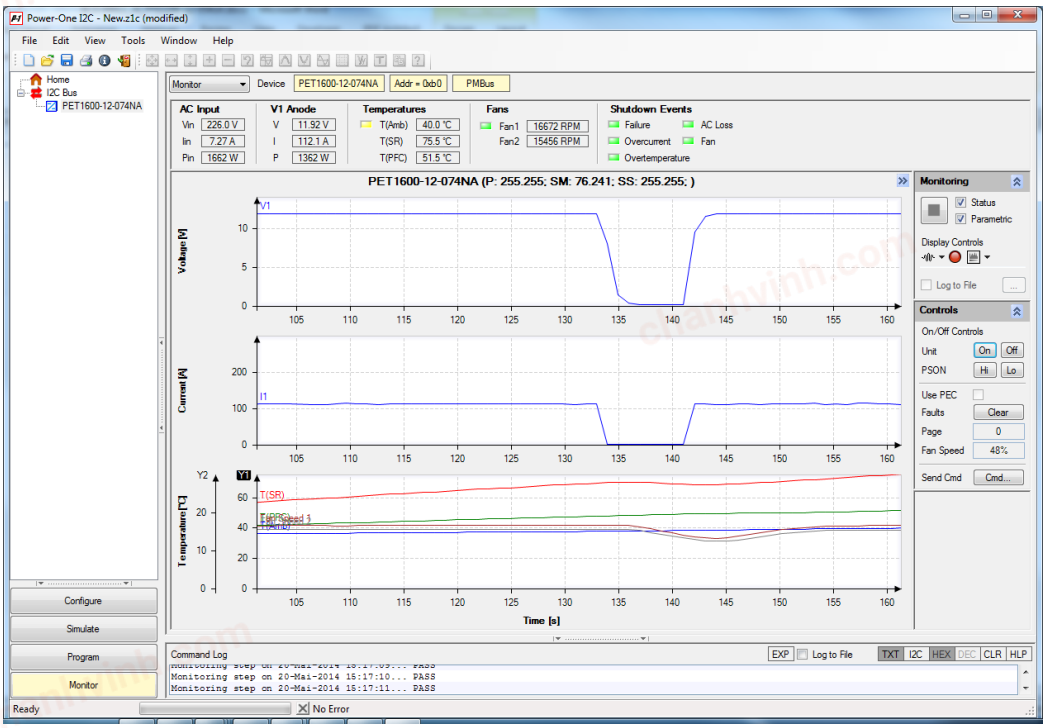

Figure 32. Monitoring dialog of the I²C Utility

10. TEMPERATURE AND FAN CONTROL

10.1 FAN CONTROL

To achieve best cooling results sufficient airflow through the supply must be ensured. Do not block or obstruct the airflow at the rear of the supply by placing large objects directly at the output connector. The PET2000-12-074RA is provided with a front to rear airflow, which means the air enters on the AC-inlet side of the supply and leaves at the DC-output, while the PET2000-12-074NA is provided with a rear to front airflow, which means the air enters through the DC-output of the supply and leaves at the AC-inlet side, as shown in *Figure 33*.

The PET2000-12-074xA supply has been designed for horizontal operation.

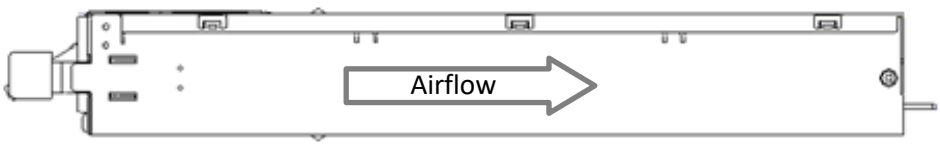

PET2000-12-074RA

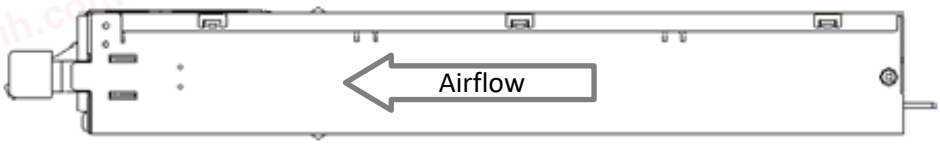

PET2000-12-074NA

Figure 33. Airflow direction

© 2023 Bel Power Solutions

chanhvinh.com

The fan inside the supply is controlled by a microprocessor. The rpm of the fan is adjusted to ensure optimal supply cooling and is a function of output power. Three different curves are selected based on input voltage and inlet temperature. With standby output loaded the fan speed minimum is limited to ensure enough cooling of circuits providing standby power. *Figure 34* illustrates the programmed fan curves.

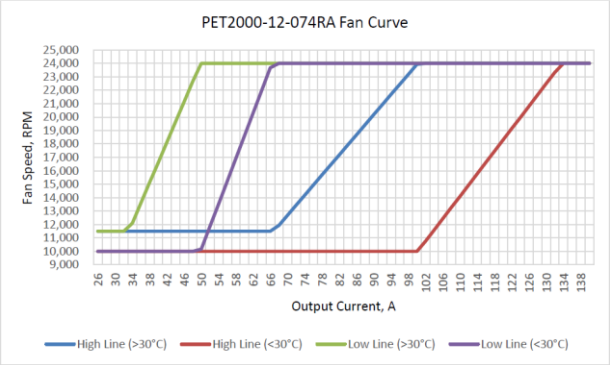

PET2000-12-074RA

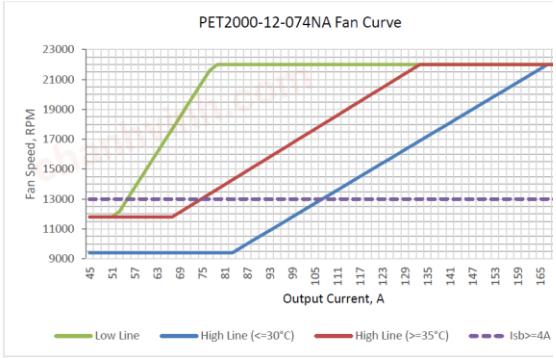

PET2000-12-074NA

Figure 34. Fan speed vs. main output load

10.2 TEMPERATURE MONITOR AND OVER TEMPERATURE PROTECTION

PET2000-12-074xA provides access via I²C to the measured temperatures of in total 6 sensors within the power supply, see *Table 4*. The microprocessor is monitoring these temperatures and if warning threshold of one of these sensors is reached it will set fan to maximum speed. If temperatures continue to rise above shut down threshold the main output V_1 (or V_{SB} if auxiliary converter is affected) will be disabled. At the same time the warning or fault condition is signalized accordingly through LED, PWOK_H and SMBALERT_L.

TEMPERATURE SENSOR	DESCRIPTION / CONDITION	POWER MANAGEMENT BUS REGISTER	WARNING THRESHOLD	SHUTDOWN THRESHOLD
PET2000-12-074RA				
Inlet Air Temperature	Sensor located on control board close to DC end of PSU	8Dh	61°C	63°C
Synchronous Rectifier	Sensor located on secondary side of DC/DC stage	8Eh	105°C	110°C
Primary Heat Sink	Sensor located on primary heat sink	8Fh	96°C	101°C
Output ORing Element	Sensor located close to output	D2h	105°C	110°C
Auxiliary Converter	Sensor located on secondary side on auxiliary rectifier	D3h	95°C	100°C
Outlet Ambient	Sensor located near output connector	D4h	85°C	90°C
PET2000-12-074NA				
Inlet Air Temperature	Sensor located on control board close to DC end of PSU	8Dh	75°C	78°C
Synchronous Rectifier	Sensor located on secondary side of DC/DC stage	8Eh	95°C	100°C
Primary Heat Sink	Sensor located on primary heat sink	8Fh	87°C	92°C
Output ORing Element	Sensor located close to output	D2h	100°C	105°C
Auxiliary Converter	Sensor located on secondary side on auxiliary rectifier	D3h	80°C	85°C
Bridge Rectifier	Sensor located on heat sink for AC rectifier	D4h	86°C	91°C

Table 4. Temperature sensor location and thresholds

chanhvinh.com

10.3 MAXIMUM OUTPUT POWER VERSUS INLET TEMPERATURE FOR SAFETY COMPLIANCY

For safety compliant operation the power supply must not exceed specified operating conditions specified herein. These operating conditions ensure the input AC connector is operated within its ratings.

The different input AC connectors and regional usage is not considered in this implementation of current limitation. Therefore, it is under the responsibility of the user to ensure safety compliant operation.

10.3.1 PET2000-12-074RA

Between 0°C and 40°C power supply inlet temperature the maximum allowed output power is only depending on AC input connector type chosen, regional usage and the applied nominal input AC voltage. Above 40°C the maximum output power is further reduced with rising temperature. *Figure 35* to *Figure 38* illustrate these maximum current and power levels.

The mentioned power levels are related to main output power only, in addition the standby output can be operated up to 5 A with derating to 3 A as shown in *Figure 37*.

Above 55°C the power supply is adjusting the current limit level $I_{1\ OC\ Slow}$ depending on input voltage range (100-127 VAC or 200-240 VAC) and inlet temperature, as shown in *Figure 38* to protect the power supply from excessive component temperatures.

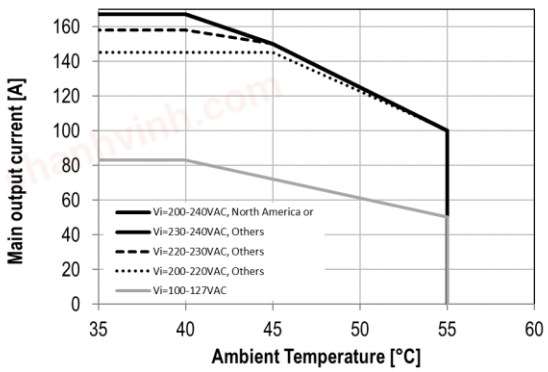

Figure 35. Maximum I_1 PET2000-12-074RA (IEC 60320-C14)

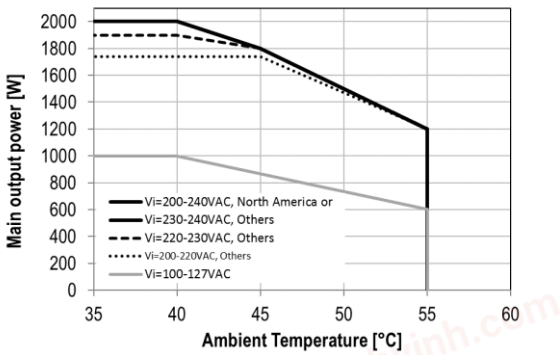

Figure 36. Maximum P_1 PET2000-12-074RA (IEC 60320-C14)

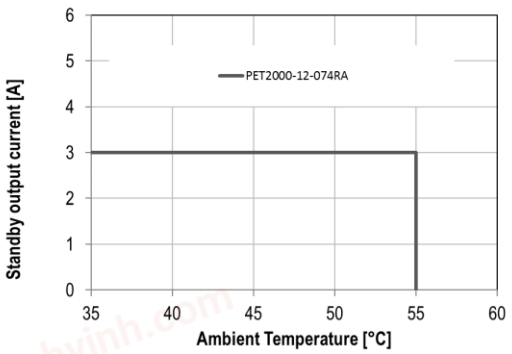

Figure 37. Maximum ISB

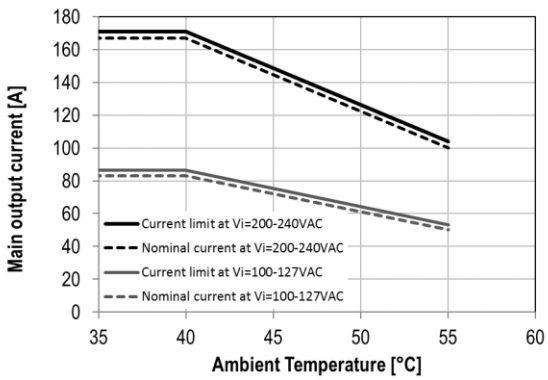

Figure 38. Current limitation vs temperature

© 2023 Bel Power Solutions

chanhvinh.com

10.3.2 PET2000-12-074NA

Between 0°C and 55°C power supply inlet temperature the maximum allowed output power is only depending on AC input connector type chosen, regional usage and the applied nominal input AC voltage. Above 55°C the maximum output power is further reduced with rising temperature. *Figure 39* to *Figure 44* illustrate these maximum current and power levels.

The mentioned power levels are related to main output power only, in addition the standby output can be operated up to 5 A with derating to 3 A as shown in *Figure 45*.

Above 55°C the power supply is adjusting the current limit level $I_{1\ OC\ Slow}$ depending on input voltage range (100-127 VAC or 200-240 VAC) and inlet temperature, as shown in *Figure 46*.

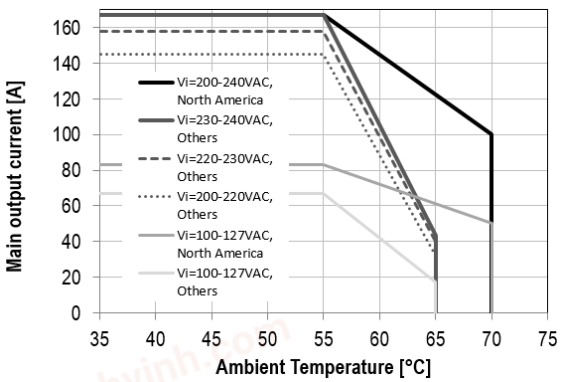

Figure 39. Maximum I1 PET2000-12-074NA (IEC 60320-C14)

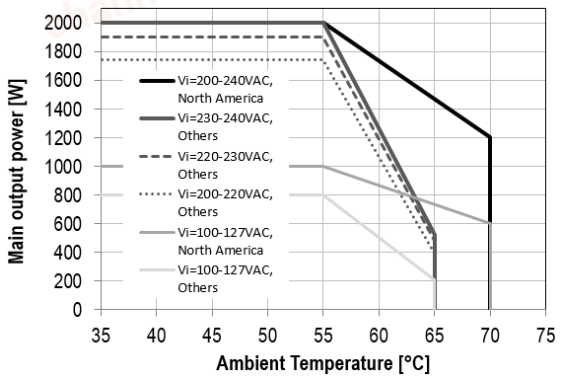

Figure 40. Maximum P1 PET2000-12-074NA (IEC 60320-C14)

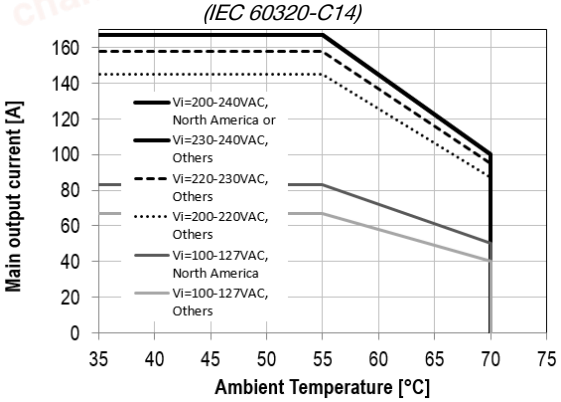

Figure 41. Maximum I_1 PET2000-12-074NAC (IEC 60320-C16)

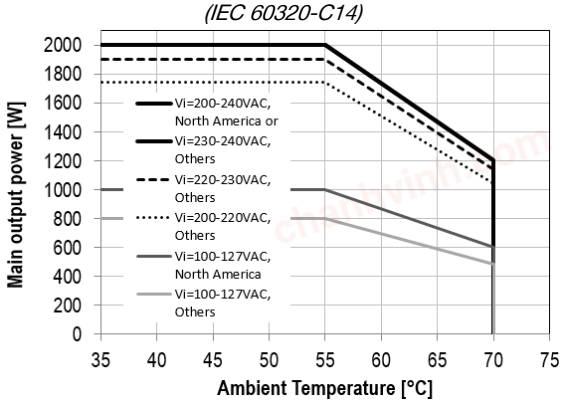

Figure 42. Maximum P_1 PET2000-12-074NAC (IEC 60320-C16)

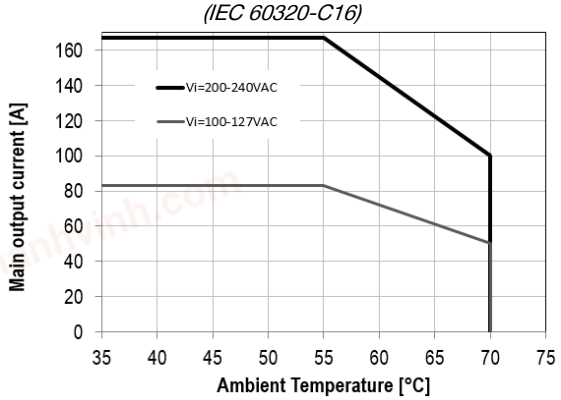

Figure 43. Maximum I_1 PET2000-12-074NAA (Anderson Saf-D-Grid®)

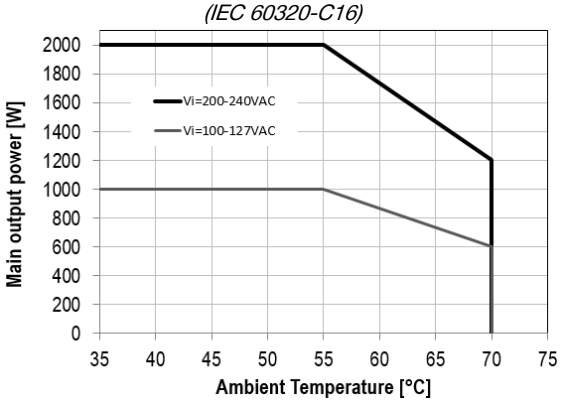

Figure 44. Maximum P_1 PET2000-12-074NAA (Anderson Saf-D-Grid®)

chanhvinh.com

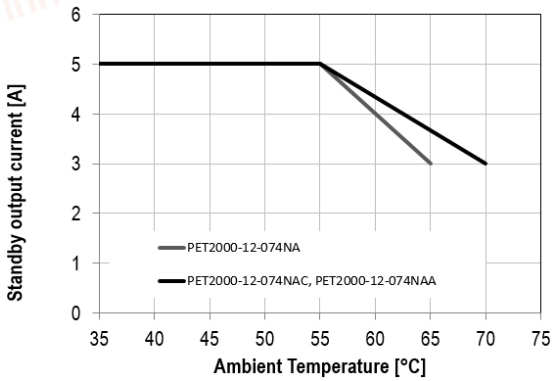

Figure 45. Maximum ISB

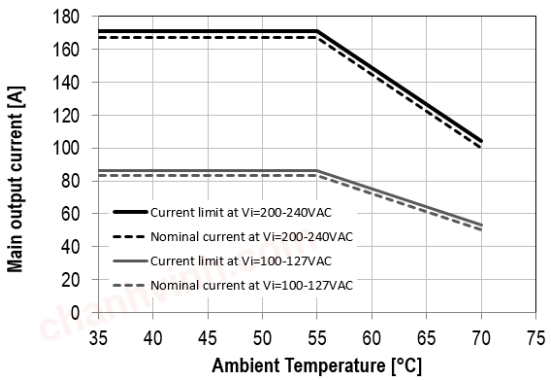

Figure 46. Current limitation vs temperature

11. ELECTROMAGNETIC COMPATIBILITY

11.1 IMMUNITY

PARAMETER	DESCRIPTION / CONDITION	CRITERION
ESD Contact Discharge	IEC / EN 61000-4-2, ±8 kV, 25+25 discharges per test point (metallic case, LED, connector body)	A
ESD Air Discharge	IEC / EN 61000-4-2, ±15 kV, 25+25 discharges per test point (non-metallic user accessible surfaces)	A
Radiated Electromagnetics Filed	IEC / EN 61000-4-3, 10 V/m, 1 kHz/80% Amplitude Modulation, 1µs Pulse Modulation, 10 kHz ... 2 GHz	A
Burst	IEC / EN 61000-4-4, Level 3 AC port ±2 kV, 1 minute	A
Surge	IEC / EN 61000-4-5, Level 3 Line to Earth: ±2 kV Line to Line: ±1 kV	A
RF Conducted Immunity	IEC / EN 61000-4-6, Level 3, 10 Vrms, CW, 0.1 … 80 MHz	A
Voltage Dips and Interruptions	IEC / EN 61000-4-11 Vi 230VAC / 50 Hz, 90% load, Phase 0°, Dip 100% , duration 10 ms Vi 200VAC / 50 Hz, 70% load, Phase 0°, Dip 30% , duration 500 ms Vi 200VAC / 50 Hz, 100% load, Phase 0°, Dip 20% , duration 10 s	V_1: A, V_{SB}: A V_1: A, V_{SB}: A V_1: A, V_{SB}: A

11.2 EMISSION

PARAMETER	DESCRIPTION / CONDITION	CRITERION
Conducted Emission	EN 55022 / CISPR 22: 0.15 … 30 MHz, QP and AVG, single power supply EN 55022 / CISPR 22: 0.15 … 30 MHz, QP and AVG, 2 power supplies in a system	Class A 6 dB margin Class A
Radiated Emission	EN 55022 / CISPR 22: 30 MHz … 1 GHz, QP, single power supply EN 55022 / CISPR 22: 30 MHz … 1 GHz, QP, 2 power supplies in a system	Class A 6 dB margin Class A
Harmonic Emissions	IEC 61000-3-2, Vi = 115 VAC / 60 Hz & 230 VAC / 50 Hz, 100% Load	Class A
AC Flicker	IEC 61000-3-3, Vi = 230 VAC / 50Hz, 100% Load	Pass
Acoustical Noise	Distance at bystander position, 25°C, 50% Load	65 dBA

© 2023 Bel Power Solutions

chanhvinh.com

12. SAFETY / APPROVALS

Maximum electric strength testing is performed in the factory according to IEC/EN 62368-1, and UL/CSA 62368-1. Input-to-output electric strength tests should not be repeated in the field. Bel Power Solutions will not honor any warranty claims resulting from electric strength field tests.

PARAMETER	DESCRIPTION / CONDITION	NOTES
Agency Approvals	Approved to latest edition of the following standards: UL/CSA62368-1, IEC62368-1 and EN62368-1.	Approved
Grade of Insulation	Input (L/N) to chassis (PE) Input (L/N) to output Output to chassis	Basic Reinforced None (Direct connection)
Creepage / Clearance	Primary (L/N) to chassis (PE) Primary to secondary	
Electrical Strength Test	Input to chassis Input to output (tested by manufacturer only)	Min. 2500 VDC 4000 VDC

13. ENVIRONMENTAL

PARAMETER		DESCRIPTION / CONDITION	MIN	NOM	MAX	UNIT
T_A	Ambient Temperature	Up to 1'000 m ASL	0		+40 +55*	°C
		Linear derating from 1'000 to 3'048 m ASL			+35 +45*	°C
$T_{A\,ext}$	Extended Temp. Range	Reduced output power[13], up to 1'000 m ASL			+55 +70*	°C
		Linear derating from 1'000 to 3'048 m ASL			+50 +60*	
T_S	Storage Temperature	Non-operational	-20		+70	°C
	Altitude	Operational, above Sea Level	-		3'048	m
		Non-operational, above Sea Level	-		10'600	m
	Shock, operational	Half sine, 11ms, 10 shocks per direction, 6 directions			1	g peak
	Shock, non-operational				30	g peak
	Vibration, sinusoidal, operational	IEC/EN 60068-2-6, sweep 5 to 500 to 5 Hz, 1 octave/min, 5 sweep per axis			1	g peak
	Vibration, sinusoidal, non-operational				4	g peak
	Vibration, random, non-operational	IEC/EN 60068-2-64, 5 to 500 Hz, 1 hour per axis			0.025	g^2/Hz

** Max temperature values for PET2000-12-074NA model.*

14. RELIABILITY

PARAMETER		DESCRIPTION / CONDITION	MIN	NOM	MAX	UNIT
MTBF	Mean time to failure	T_A = 25°C, according Telcordia SR-332, issue 3, GB, confidence level = 90%	860			kh

15. MECHANICAL

PARAMETER		DESCRIPTION / CONDITION	MIN	NOM	MAX	UNIT
	Dimensions	Width Heigth Depth		73.5 40.0 265.0		mm mm mm
m	Weight			1.1		kg

[13] See chapter 10.3

chanhvinh.com

15.1 OUTLINE PET2000-12-074xA, PET2000-12-074xAC

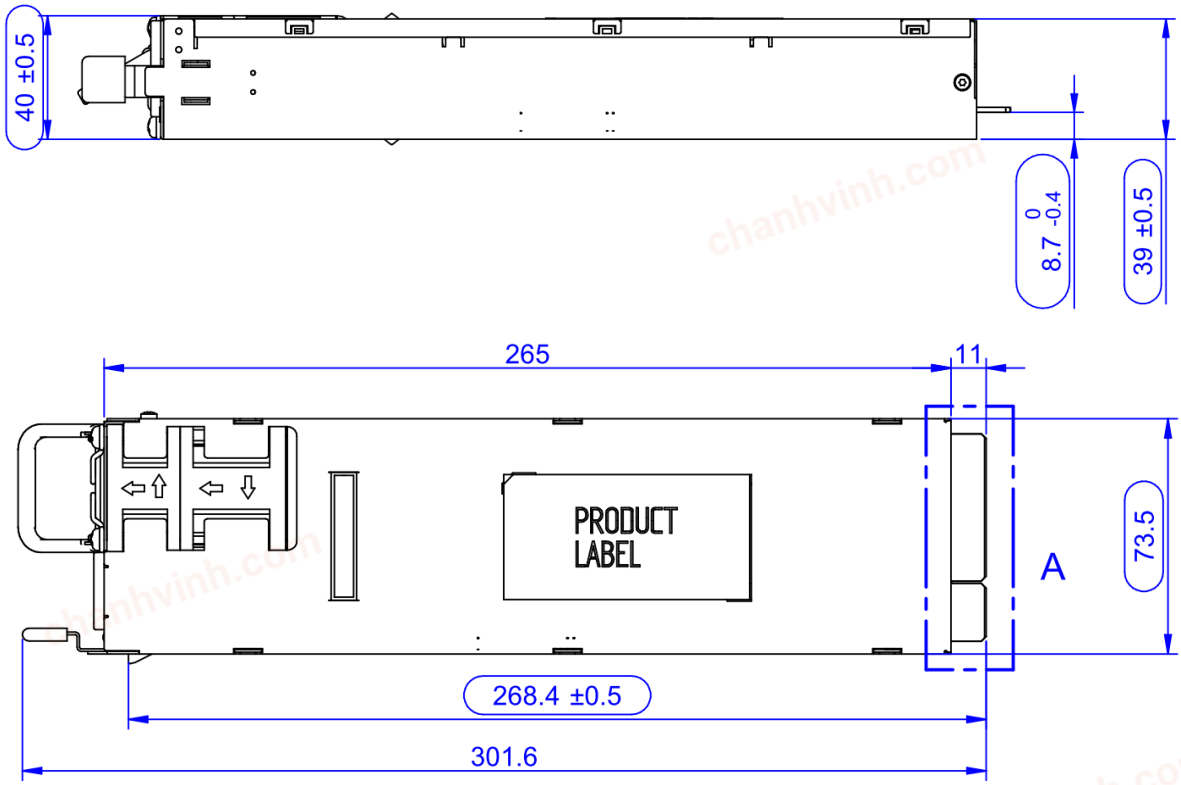

Figure 47. Top and side view

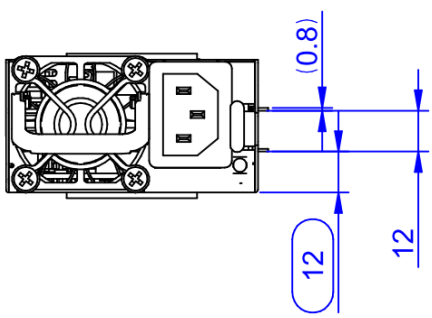

Figure 48. Front view

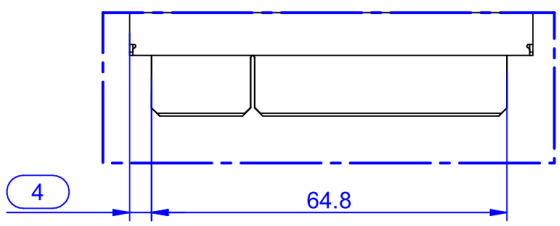

Figure 49. Rear view

© 2023 Bel Power Solutions

chanhvinh.com

15.2 OUTLINE PET2000-12-074NAA

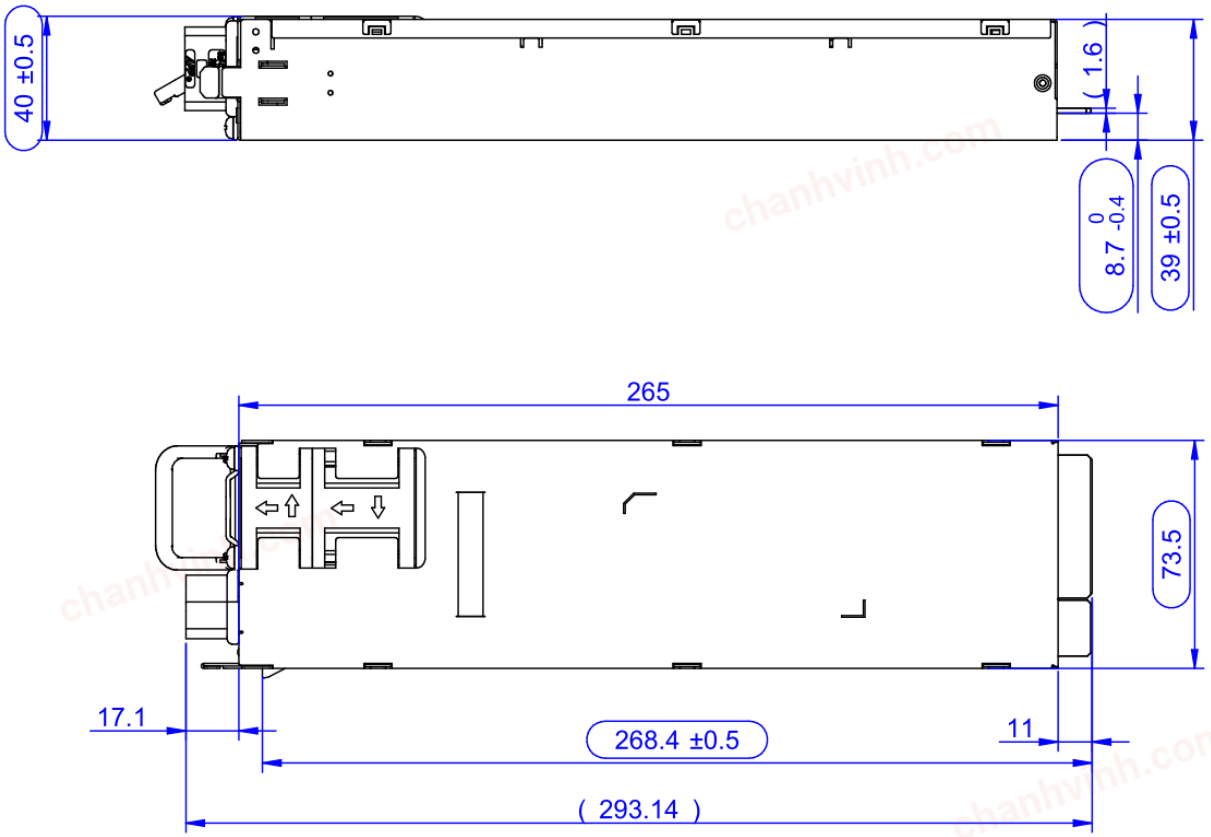

Figure 50. Top and side view

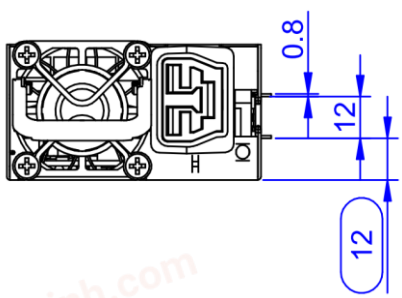

Figure 51. Front view

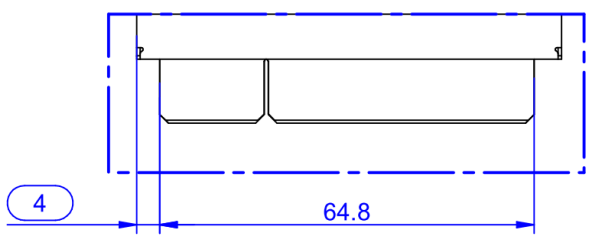

Figure 52. Detail A

chanhvinh.com

15.3 OPTION OF ADDING KEYING SCREW

A thread added to the side of the PET2000-12-074xA allows the user to add a screw to prevent the PET2000-12-074xA from being inserted into systems using other card edge connector types with the same power supply width and height. In such case, systems using PET2000-12-074xA must have a slot of ø6 mm x 14 mm implemented to allow PET2000-12-074xA to be inserted. The maximum size of the screw head is ø6 mm and height 2.12 mm.

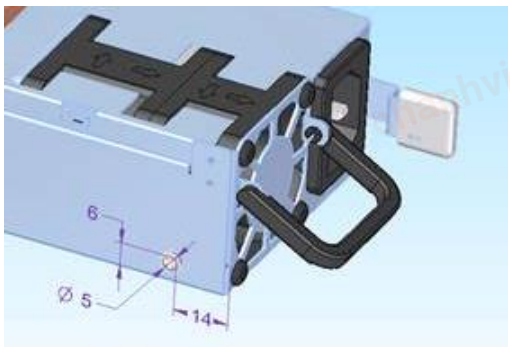

Figure 53. Polarizing screw

15.4 OUTPUT CONNECTOR PIN LOCATIONS

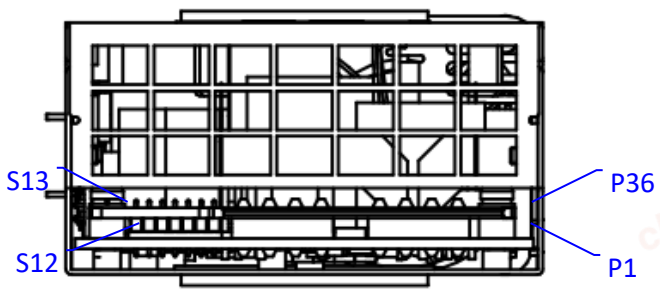

Figure 54. Rear view

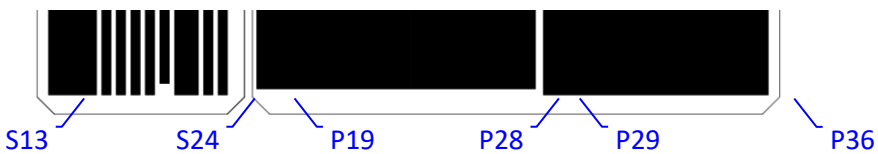

Figure 55. Card edge PCB top view

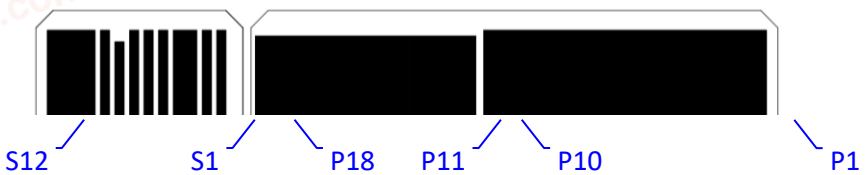

Figure 56. Card edge PCB bottom view

© 2023 Bel Power Solutions

chanhvinh.com

16. CONNECTORS

PARAMETER	DESCRIPTION / CONDITION	MIN	NOM	MAX	UNIT
AC inlet	PET2000-12-074xA : IEC 60320-C14 PET2000-12-074xAC : IEC 60320-C16 PET2000-12-074NAA: Anderson Saf-D-Grid®, P/N 2006G1				
AC cord requirement	Wire size	16			AWG
Output connector	36 Power- + 24 Signal-Pins PCB card edge				
Mating output connector	Manufacturer: FCI Electronics Manufacturer P/N: 10130248-005LF (see *Figure 59* for option x) Bel Power Solutions P/N: ZES.00678				

16.1 MATING OUTPUT CONNECTOR SPECIFICATION

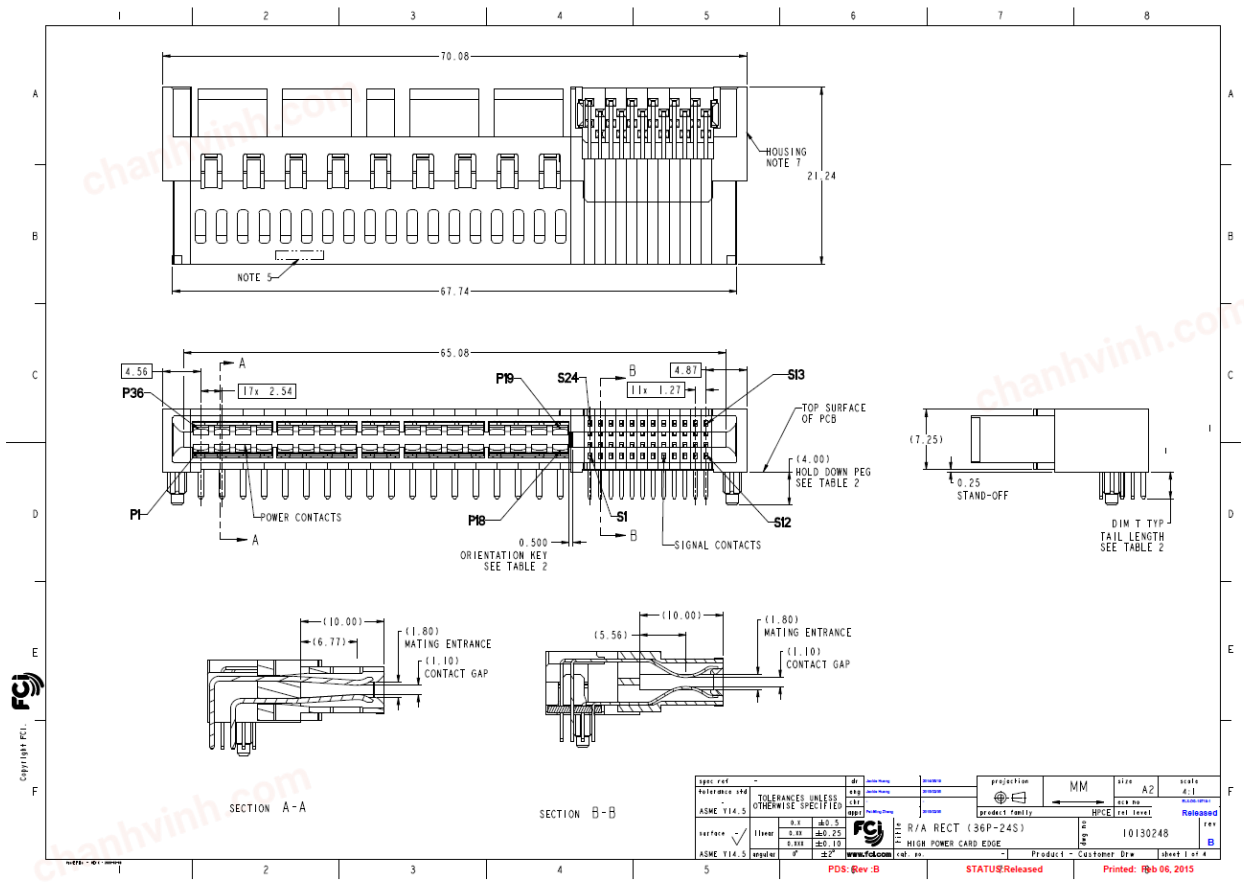

Figure 57. Mating connector drawing page 1

chanhvinh.com

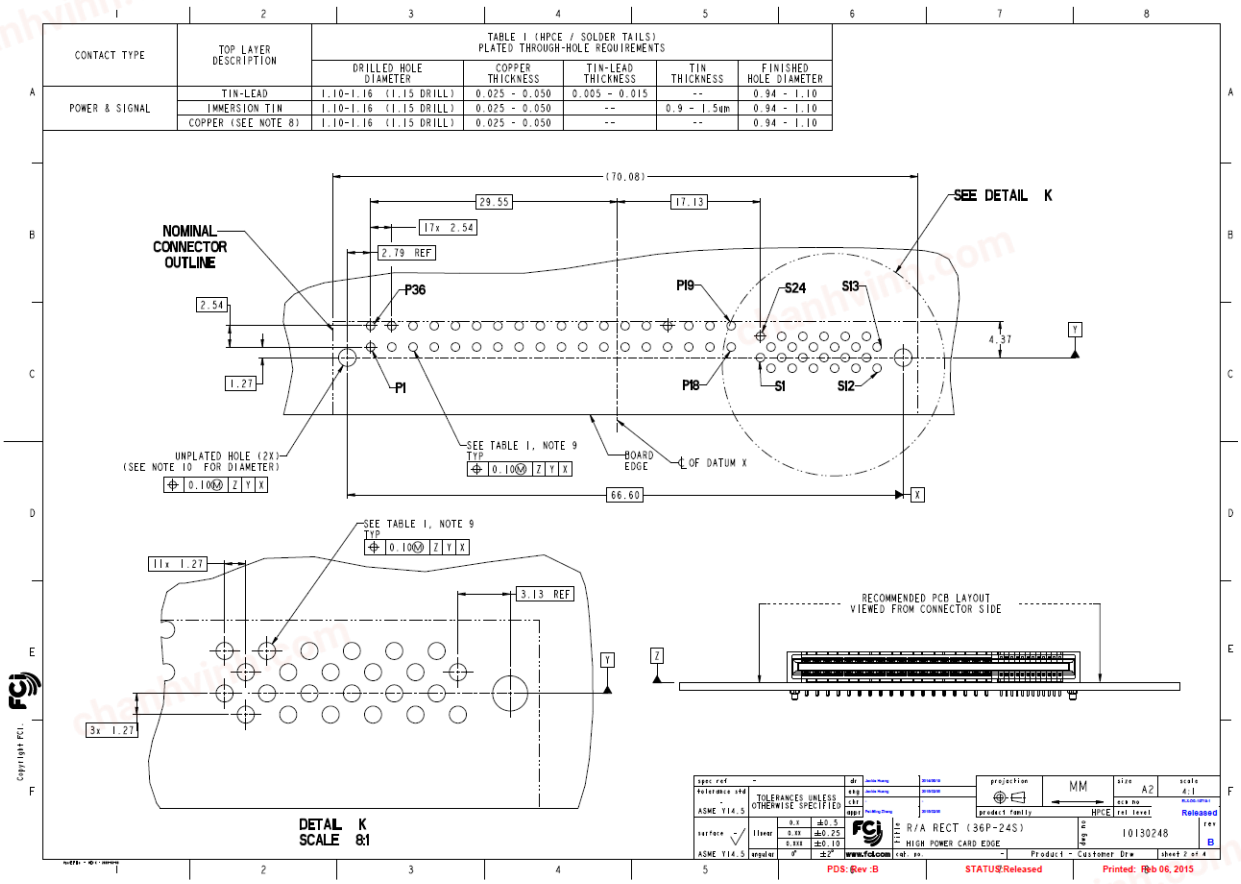

Figure 58. Mating connector drawing page 2

© 2023 Bel Power Solutions

chanhvinh.com

HPCE PART NUMBER (TABLE 2)

PART NUMBER	TAIL TYPE	ORIENTATION KEY	HOLD-DOWN OPTION	DIM T TAIL LENGTH ±0.25
10130248-001LF	SOLDER TAIL	YES	YES	2.60
10130248-002LF	SOLDER TAIL	NO	YES	2.60
10130248-003LF	SOLDER TAIL	NO	NO	2.60
10130248-004LF	SOLDER TAIL	YES	NO	2.60
10130248-005LF	SOLDER TAIL	YES	YES	3.25
10130248-006LF	SOLDER TAIL	NO	YES	3.25
10130248-007LF	SOLDER TAIL	NO	NO	3.25
10130248-008LF	SOLDER TAIL	YES	NO	3.25
10130248-009LF (B)	SOLDER TAIL	YES	YES	4.05
10130248-010LF (B)	SOLDER TAIL	NO	YES	4.05
10130248-011LF (B)	SOLDER TAIL	NO	NO	4.05
10130248-012LF (B)	SOLDER TAIL	YES	NO	4.05
10130248-013LF (A)	SOLDER TAIL	YES	YES	4.85
10130248-014LF (A)	SOLDER TAIL	NO	YES	4.85
10130248-015LF (A)	SOLDER TAIL	NO	NO	4.85
10130248-016LF (A)	SOLDER TAIL	YES	NO	4.85

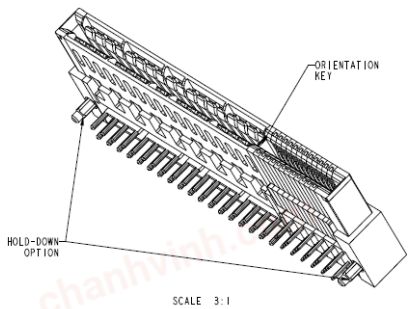

SCALE 3:1

NOTES:

1. CONNECTOR MATERIALS:
   HOUSING: HIGH TEMPERATURE THERMAL PLASTIC, BLACK UL 94V-0 COMPLIANT
   CONTACTS: HIGH PERFORMANCE COPPER ALLOY.
2. CONTACT FINISH REF. GS-12-604 SECTION 5.2.
3. PRODUCT SPECIFICATION: GS-12-604.
4. APPLICATION SPECIFICATION: GS-20-128.
5. PRODUCT MARKING (FCI - PART NUMBNER & DATE CODE) ON HOUSING IN AREA SHOWN.
6. PACKAGING MEETS FCI SPECIFICATION GS-14-937.
7. HOUSING COMPONENT WILL WITHSTAND EXPOSURE TO 260°C PEAK TEMPERATURE FOR 60 SECONDS IN A CONVECTION, INFRA-RED, OR VAPOR PHASE REFLOW OVEN.
8. COPPER PLATING THICKNESS IN CENTER OF VIA-HOLE CAN BE NO MORE THAN 0.003 LESS THAN OTHER AREAS.
9. ALL HOLE SIZES ARE FINISHED HOLE SIZES.
10. MOUNTING HOLES ARE UNPLATED
    Ø 2.10 +/- 0.1 FOR SOLDER TAILS
    (A) Ø 2.18 +/- 0.03 FOR LOW PLASTIC PEG INSERTION FORCE
11. A (A) SYMBOL WILL BE NEXT TO ANY DIMENSION , VIEW OR NOTE WHICH HAS BEEN MODIFIED WITH THE CURRENT DRAWING VERSION .

Copyright FCI.

TOLERANCES UNLESS OTHERWISE SPECIFIED
ASME Y14.5
MM
A2
HPCE
Released
R/A RECT (36P-24S)
HIGH POWER CARD EDGE
10130248
B
www.fci.com
PDS: Rev :B
STATUS: Released
Printed: Feb 06, 2015

Figure 59. Mating connector drawing page 3

chanhvinh.com

16.2 MATING OUTPUT CONNECTOR SPECIFICATION

PIN	SIGNAL NAME	DESCRIPTION	MATING SEQUENCE[14]
P1 ~ P10	GND	Power and signal ground (return)	1
P29 ~ P36	GND		
P11 ~ P18	V1	+12 VDC main output	2
P19 ~ P28	V1		
S1	A0	I²C address selection input	2
S2	A1		2
S3, S4	VSB	+12 V Standby positive output (as pins S3, S4)	2
S5	HOTSTANDBYEN_H	Hot standby enable signal, active-high	2
S6	ISHARE	Analog current share bus	2
S7	Reserved	For future use, do not connect	2
S8	PRESENT_L	Power supply seated, active-low	3
S9	A2	I²C address selection input	2
S10 ~ S15	GND	Power and signal ground (return)	2
S16	PWOK_H	Power OK signal output, active-high	2
S17	V1_SENSE	Main output positive sense	2
S18	V1_SENSE_R	Main output negative sense	2
S19	SMB_ALERT_L	SMB Alert signal output, active-low	2
S20	PSON_L	Power supply on input, active-low	3
S21, S22	VSB	+12 V Standby positive output (as pins S3, S4)	2
S23	SCL	I²C clock signal line	2
S24	SDA	I²C data signal line	2

Table 5. Output connector pin assignment

[14] 1 = First, 3 = Last, given by different card edge finger pin lengths and mating connector pin arrangement

© 2023 Bel Power Solutions

chanhvinh.com

17. ACCESSORIES

ITEM	DESCRIPTION	ORDERING PART NUMBER	SOURCE
	**I²C Utility** Windows XP/Vista/7 compatible GUI to program, control and monitor Front-End power supplies (and other I²C units)	ZS-00130	belfuse.com/power-solutions
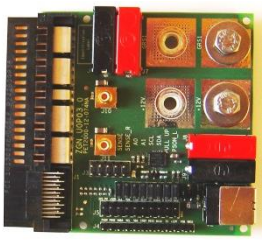	**Evaluation Board** Connector board to operate PET2000-12-074xA. Includes an on-board USB to I²C converter (use I²C Utility as desktop software).	YTM.00046	belfuse.com/power-solutions
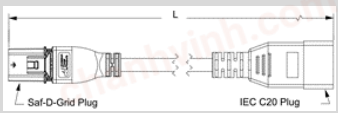	**AC cable for PET2000-12-074NAA** Anderson Saf-D-Grid® receptacle to IEC 60320-C20 plug, 14 AWG, 2 m, Anderson P/N 2052KH2	TBD	

18. REVISION HISTORY

DATE	REVISION	DESCRIPTION OF CHANGE	ECO/MCO REFERENCE NO.
2019-Jun-19	AL	Page 4: Max. Output currents updated in the table	C94036
2023-Nov-06	AM	Update the safety approve standard and electrical strength test at section 12	

For more information on these products consult: tech.support@psbel.com

NUCLEAR AND MEDICAL APPLICATIONS - Products are not designed or intended for use as critical components in life support systems, equipment used in hazardous environments, or nuclear control systems.
TECHNICAL REVISIONS - The appearance of products, including safety agency certifications pictured on labels, may change depending on the date manufactured. Specifications are subject to change without notice.