chanhvinh.com

Accessories
Connectors and cables

Female connector M23, 12-pin



Features

- **Female connector M23 with screwable nut**
- **With or without cable (shielded) in different lengths**
- **Cable version: shield is placed onto the connector housing**

Part number

Z 130.001	Female connector M23, 12-pin, less cable
Z 130.003	Female connector M23, 12-pin, 2 m cable
Z 130.004	Female connector M23, 12-pin, 3 m cable
Z 130.005	Female connector M23, 12-pin, 5 m
Z 130.007	Female connector M23, 12-pin, 10 m cable

Suitable for

G0A2H, G0M2H, G1M2H, G2M2H, GA240, GA241, GBA2H, GBA2S, GBA2W, GBM2H, GBM2S, GBM2W, GM400, GM401, GXA2S, GXM2S, GXM7S, GXM7W

Technical data

Voltage supply	<300 V
Core diameter	1.00 +0.05 mm
Cable length	2 m, 3 m, 5 m, 10 m (further length upon request)
Cable type	LiYCY-t 5x2x0.14 mm² (shielded cable)
Bending radius	10 x cable diameter
Outer diameter	7.5 ±0.4 mm
Operating temperature	-30...+105 °C
Conductor resistance	<140 Ω/km (20 °C)
Material	Cable sheath: PVC grey

Terminal assignment

Connector	Core colour
Pin 1	brown
Pin 2	black
Pin 3	blue
Pin 4	beige
Pin 5	green
Pin 6	yellow
Pin 7	violet
Pin 8	yellow/brown
Pin 9	pink
Pin 10	yellow/black
Pin 11 / 12	–

Cores twisted in pairs: black-brown, blue-violet, green-pink, beige-yellow, yellow/brown-yellow/black

Dimensions

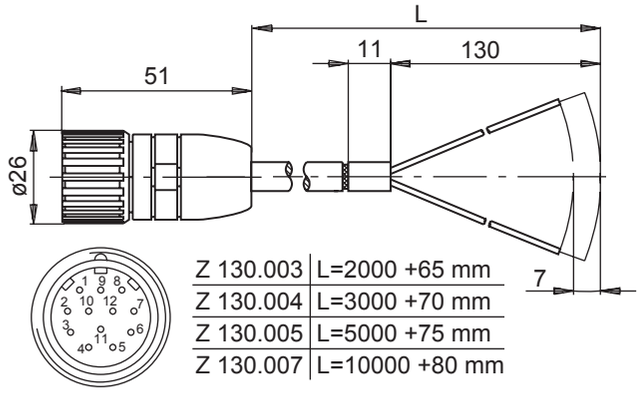

Z 130.003	L=2000 +65 mm
Z 130.004	L=3000 +70 mm
Z 130.005	L=5000 +75 mm
Z 130.007	L=10000 +80 mm

Subject to modification in technic and design. Errors and omissions excepted.