chanhvinh.com

Ultrasonic proximity sensors

UZDK 30P6103/S14

dimension drawing

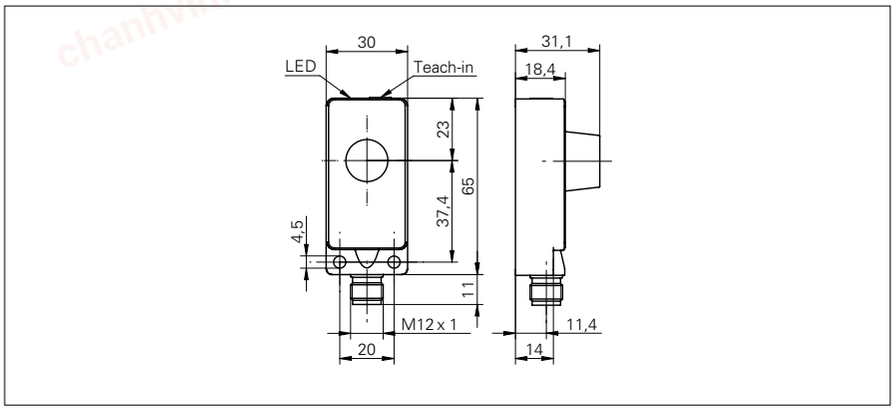

general data

special type	2 point proximity switch
scanning range Sd	100 ... 1000 mm
scanning range far limit Sde	100 ... 1000 mm
hysteresis typ.	4 % Sde
repeat accuracy	< 0,5 mm
temperature drift	< 2 % Sde
response time ton	< 40 ms
release time toff	< 40 ms
sonic frequency	240 kHz
adjustment	Teach-in
alignment aid	target indication flashing
output indicator	green / yellow LED

electrical data

voltage supply range +Vs	12 ... 30 VDC
current consumption max. (no load)	40 mA
output circuit	PNP make function (NO)
output current	< 200 mA
voltage drop Vd	< 2 VDC
residual ripple	< 10 % Vs
short circuit protection	yes
reverse polarity protection	yes

mechanical data

type	rectangular
housing material	polyester / die-cast zinc
width / diameter	30 mm
height / length	65 mm
depth	31 mm
connection types	connector M12

ambient conditions

operating temperature	-10 ... +60 °C
protection class	IP 67

photo



connection diagram

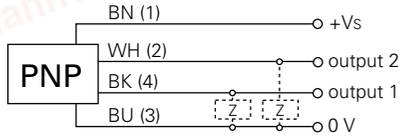

- Two separate outputs

chanhvinh.com

Ultrasonic proximity sensors

UZDK 30P6103/S14

typical sonic cone profile

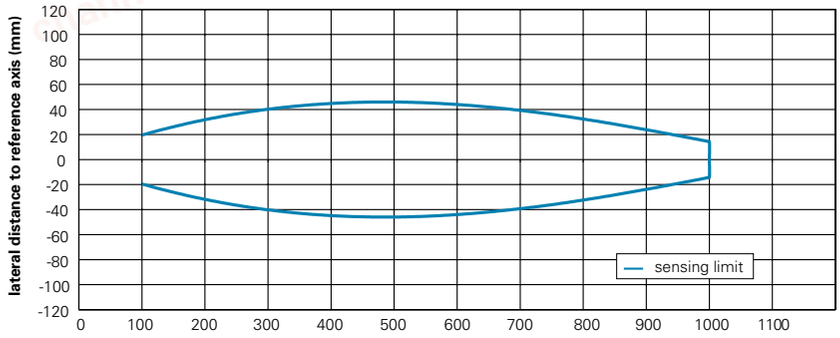

standard target with 30 x 30 mm, directed rectangular to sensor's reference axis