chanhvinh.com

Ultrasonic distance measuring sensors

UNDK 09U6914/KS35AD1

dimension drawing

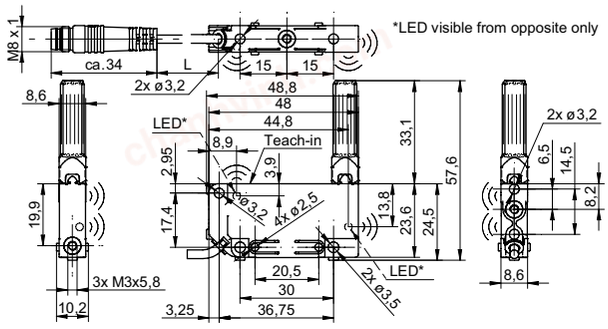

general data

scanning range Sd	3 ... 150 mm
scanning range close limit Sdc	3 ... 150 mm
scanning range far limit Sde	3 ... 150 mm
repeat accuracy	< 0,5 mm
resolution	< 0,3 mm
response time ton	< 35 ms
release time toff	< 35 ms
temperature drift	< 2 % of distance to target So
sonic frequency	380 kHz
adjustment	Teach-in
alignment aid	target indication flashing
light indicator	yellow LED / red LED

electrical data

voltage supply range +Vs	15 ... 30 VDC
current consumption max. (no load)	35 mA
output circuit	voltage output
output signal	0 ... 10 V / 10 ... 0 V
output current	< 15 mA
residual ripple	< 10 % Vs
short circuit protection	yes
reverse polarity protection	yes

mechanical data

type	rectangular
housing material	PA 12
material (beam columnator)	POM
width / diameter	8,6 mm
height / length	48,8 mm
depth	57,7 mm
connection types	flylead connector M8, L=200 mm

ambient conditions

operating temperature	0 ... +60 °C
protection class	IP 67

photo



connection diagram

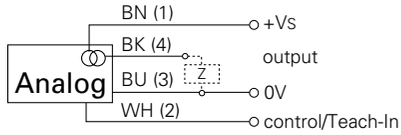

- Scanning range 3 ... 150 mm, measured from nozzle

chanhvinh.com

chanhvinh.com

Ultrasonic distance measuring sensors

UNDK 09U6914/KS35AD1

typical sonic cone profile

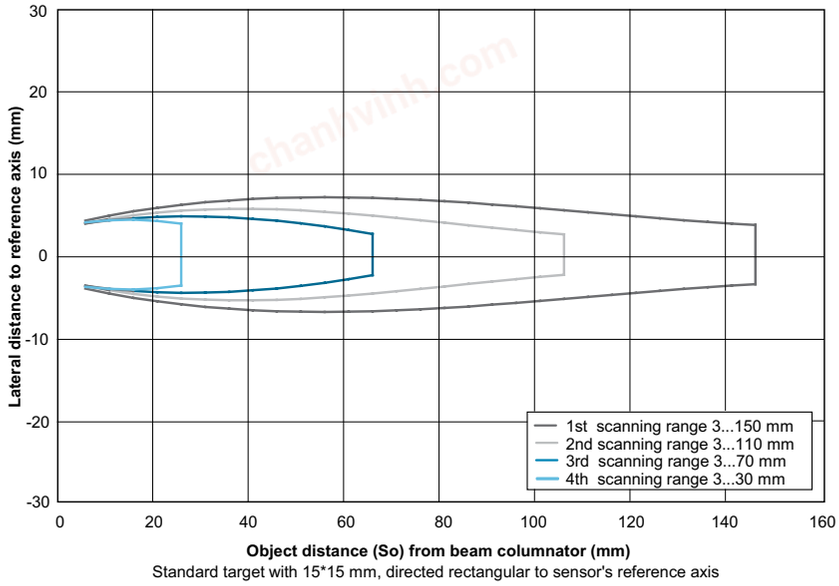

Standard target with 15*15 mm, directed rectangular to sensor's reference axis