chanhvinh.com

Ultrasonic proximity sensors

U500.PA0.2-11200633

dimension drawing

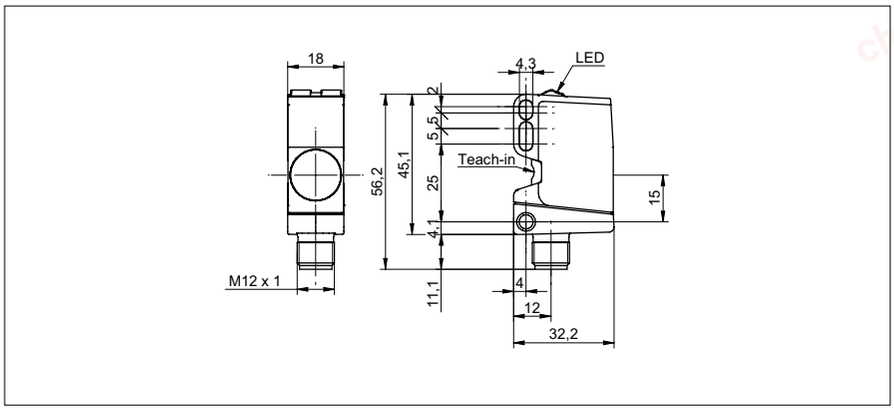

general data

special type	2 point proximity switch
scanning range Sd	70 ... 1000 mm
scanning range far limit Sde	70 ... 1000 mm
version	IO-Link dual channel
hysteresis typ.	4 % Sde
repeat accuracy	< 0,5 mm
temperature drift	< 2 % Sde
power-up drift	compensated after 15 min.
response time ton	< 40 ms
release time toff	< 40 ms
sonic frequency	200 kHz
adjustment	qTeach, line-Teach, IO-Link
output indicator	yellow LED / red LED
power on indication	LED green
alignment measuring axis	< 2°

electrical data

voltage supply range +Vs	12 ... 30 VDC
current consumption typ.	35 mA
output circuit	push-pull
output current	< 100 mA
voltage drop Vd	< 3,5 VDC
residual ripple	< 10 % Vs
short circuit protection	yes
reverse polarity protection	yes

mechanical data

type	rectangular
housing material	plastic (ASA, PMMA)
coating active face	PEEK
width / diameter	18 mm
height / length	45 mm
depth	32 mm
connection types	connector M12 5 pin

photo



connection diagram

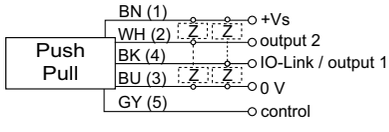

IO-Link

CE

c UL us LISTED

chanhvinh.com

Ultrasonic proximity sensors U500.PA0.2-11200633

ambient conditions	
operating temperature	-25 ... +65 °C
storage temperature	-40 ... +75 °C
protection class	IP 67

communications interface	
interface	IO-Link V1.1
baud rate	38,4 kBaud (COM 2)
cycle time	≥ 12 ms
process data length	32 Bit
process data structure	Bit 0 = SSC1 (distance) Bit 1 = SSC2 (distance) Bit 2 = quality Bit 3 = alarm Bit 5 = SSC4 (counter) Bit 8-15 = scale factor Bit 16-47 = 32 Bit measurement
IO-Link port type	Class A
additional data	distance excess gain operating cycles operating hours boot cycles operating voltage device temperature histograms
adjustable parameters	time filters LED status indicators output logic output circuit counter beam forming function of pin 5 deactivate the sensor element Find Me function

typical sonic cone profile

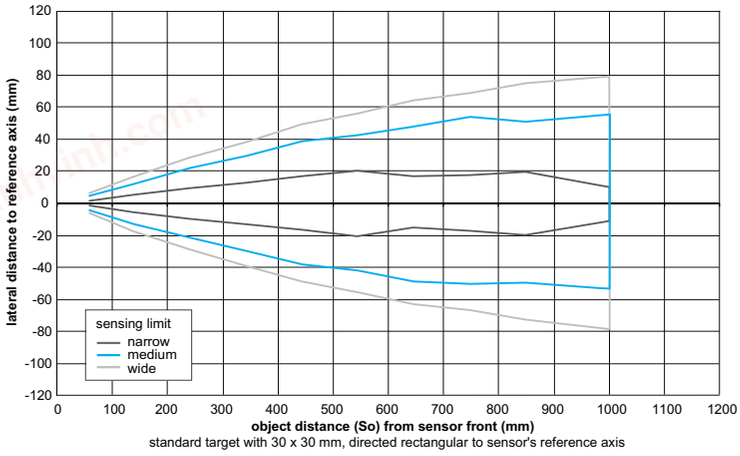

standard target with 30 x 30 mm, directed rectangular to sensor's reference axis