chanhvinh.com



# Ultrasonic proximity sensors

# U500.PA0-11110577

## dimension drawing

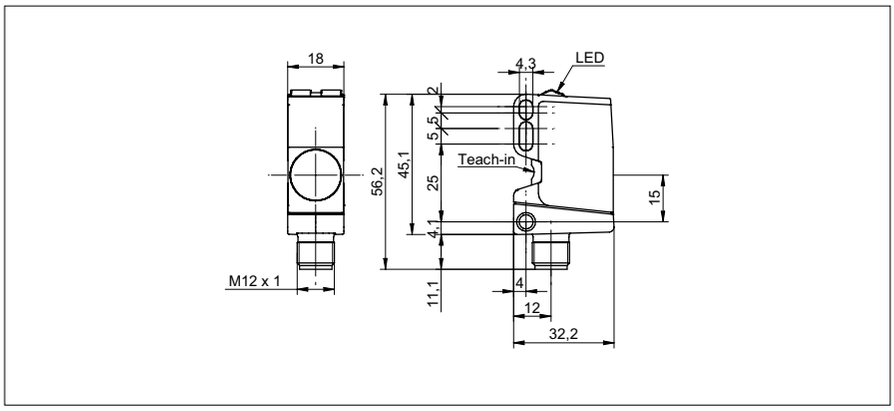


| general data | |
|---|---|
| scanning range sd | 100 ... 1000 mm |
| scanning range far limit Sde | 100 ... 1000 mm |
| hysteresis typ. | 4 % Sde |
| repeat accuracy | < 0,5 mm |
| temperature drift | < 2 % Sde |
| power-up drift | compensated after 15 min. |
| response time ton | < 50 ms |
| release time toff | < 50 ms |
| sonic frequency | 220 kHz |
| adjustment | qTeach |
| alignment aid | light indicator flashing |
| light indicator | LED yellow |
| power on indication | LED green |
| alignment measuring axis | < 2° |

| electrical data | |
|---|---|
| voltage supply range +Vs | 12 ... 30 VDC |
| current consumption typ. | 35 mA |
| output circuit | push-pull |
| output current | < 100 mA |
| voltage drop Vd | < 3,5 VDC |
| residual ripple | < 10 % Vs |
| short circuit protection | yes |
| reverse polarity protection | yes |

| mechanical data | |
|---|---|
| type | rectangular |
| housing material | plastic (ASA, PMMA) |
| width / diameter | 18 mm |
| height / length | 45 mm |
| depth | 32 mm |
| connection types | connector M12 |

| ambient conditions | |
|---|---|
| operating temperature | -25 ... +65 °C |
| storage temperature | -40 ... +75 °C |
| protection class | IP 67 |

## photo




## connection diagram

