chanhvinh.com

Tachometer

RPM, speed, frequency display

TA1200



TA1200 - tachometer

Features

- **Reading programmable as 1/s, 1/min, 1/h**
- **Input: NPN, PNP, Namur, TTL, 10…600 VAC**
- **Sensor supply 5 V, 8 V, 12 V**
- **Frequency 0.01 Hz…7 kHz**
- **Period duration measurement**
- **LED display, 4-digits**
- **DIN housing 48 x 24 mm**

Technical data - electrical ratings

Voltage supply	21...53 VAC (50/60 Hz) or 10.5...70 VDC 85...265 VAC (50/60 Hz) or 100...300 VDC
Power consumption	2.2 W
Sensor supply	5 V, 8 V or 12 V programmable / 60 mA
Display	LED, 7-segment display (with 60 unit stickers for front)
Number of digits	4-digits
Digit height	10 mm
Display range	9999 ("OuE" to signal overflow)
Display refresh	0.1...9.9 s (programmable)
Function	Digital display of frequency or speed
Programmable parameters	Measuring units 1/h, 1/min, 1/s Sensor logic Decimal point Sensor supply Impulse evaluation
Measuring principle	Period duration measurement
Signal inputs	Programmable as NPN, PNP, Namur, TTL, 10...600 VAC or contact
Counting frequency	0.01 Hz...7 kHz (20 Hz if contact input)
Scaling factor	1...9999
Data memory	>10 years in EEPROM
Standard DIN EN 61010-1	Protection class II Overvoltage category II Pollution degree 2
Emitted interference	DIN EN 61000-6-3
Interference immunity	DIN EN 61000-6-2

Technical data - mechanical design

Ambient temperature	-10...+60 °C
Storing temperature	-25...+85 °C
Relative humidity	95 % non-condensing
Connection	Sping-lodaded terminal connector, detachable
Core cross-section	1 mm² (Grid 2.54) 2.5 mm² (Grid 7.62)
Protection DIN EN 60529	IP 65 (face)
Operation / keypad	3 softkeys below bezel
Housing type	Built-in housing
Dimensions W x H x L	48 x 24 x 106 mm
Cutout dimensions	45 x 22.2 mm (+0.3)
Installation depth	95 mm
Mounting	Front panel installation by clip frame
Weight approx.	50 g
Material	Housing: Polycarbonate, UL 94V-0

Subject to modification in technic and design. Errors and omissions excepted.

chanhvinh.com

Tachometer

RPM, speed, frequency display

TA1200

Part number

TA1200.00 [ ] **AX01**

Voltage supply

4 85...265 VAC and 100...300 VDC

5 21...53 VAC and 10.5...70 VDC

Connection diagram

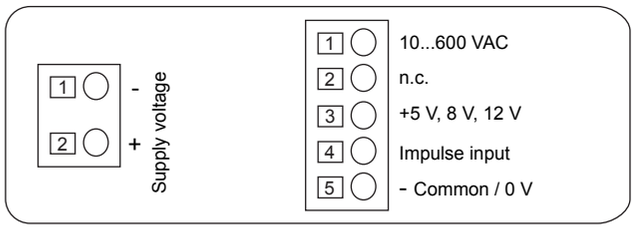

Dimensions

TA1200 - without clip frame

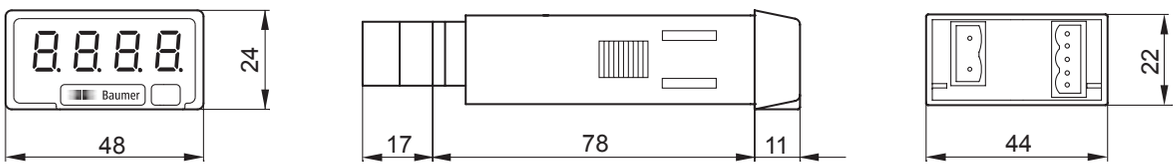

TA1200 - clip frame mounting

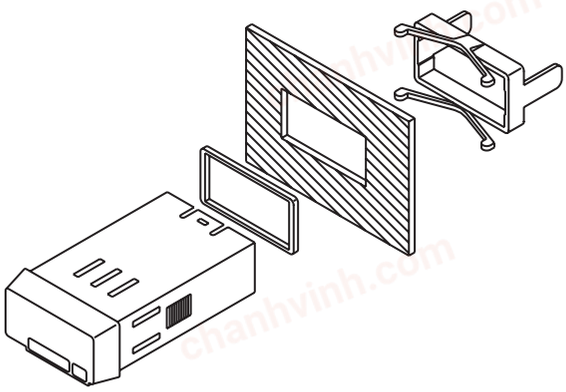

Subject to modification in technic and design. Errors and omissions excepted.