chanhvinh.com

Time and hours meters electronic

Count input for PNP, NPN or AC logic

Display LCD, 8-digits, coded time range

ISI34, ISI35



ISI34 - Hour counter

Features

- **Time and hour counter**
- **ISI34 - Time range 99999 h 59 min / 99999.99 h**
- **ISI35 - Time range 9999 h 59 min 59 s / 9999999.9 s**

Technical data - electrical ratings

Voltage supply	Lithium battery (approx. 8 years at 20 °C)
Display	LCD, 7-segment display
Backlit	24 VDC ±20 %, 50 mA
Digit height	8 mm
Function	Hour counter
Count mode	Adding
Control	NPN, PNP, Pulses 10...260 VAC/VDC
Reset	Button and electric
Keylock	Yes, electric (keylock)
Emitted interference	DIN EN 61000-6-4
Interference immunity	DIN EN 61000-6-2
Programmable parameters	Time range
Approval	UL/cULus
ISI34	
Number of digits	7-digits
ISI35	
Number of digits	8-digits

Technical data - mechanical design

Operating temperature	-10...+60 °C
Storing temperature	-20...+70 °C
Relative humidity	80 % non-condensing
Core cross-section	2.5 mm² fine wire AWG 12
Protection DIN EN 60529	IP 65 face with seal
Housing type	Housing for control panel installation
Housing colour	Deep grey, RAL 7021
Dimensions W x H x L	48 x 24 x 48 mm
Installation depth	47.7 mm
Mounting	Clip frame or screw mount
Cutout dimensions	25 x 50 mm (+0.5)
Weight approx.	50 g

Subject to modification in technic and design. Errors and omissions excepted.

chanhvinh.com

Time and hours meters electronic

Count input for PNP, NPN or AC logic

Display LCD, 8-digits, coded time range

ISI34, ISI35

Type table

ISI34 - Hour counter

Without backlit **With backlit**	**ISI34.010AA01** **ISI34.010AB01**	**ISI34.011AA01** **ISI34.011AB01**	**ISI34.013AA01** **ISI34.013AB01**
Version	**NPN**	**PNP**	**AC/DC**
Brief description	Time in: - Hours and minutes - Hours and 1/100 h	Time in: - Hours and minutes - Hours and 1/100 h	Time in: - Hours and minutes - Hours and 1/100 h
Signal input INP A	–	–	Timer AC/DC
Signal input INP B	Timer NPN	Timer PNP	External Reset AC/DC
Operating mode	99999 h 59 min or 99999.99 h	99999 h 59 min or 99999.99 h	99999 h 59 min or 99999.99 h

ISI35 - Hour counter

Without backlit **With backlit**	**ISI35.010AA01** **ISI35.010AB01**	**ISI35.011AA01** **ISI35.011AB01**	**ISI35.013AA01** **ISI35.013AB01**
Version	**NPN**	**PNP**	**AC/DC**
Brief description	Time in: - Hours, minutes, sec. - Seconds and 1/10 sec.	Time in: - Hours, minutes, sec. - Seconds and 1/10 sec.	Time in: - Hours, minutes, sec. - Seconds and 1/10 sec.
Signal input INP A	–	–	Timer AC/DC
Signal input INP B	Timer NPN	Timer PNP	External reset AC/DC
Operating mode	9999 h 59 min 59 s or 999999.9 h	9999 h 59 min 59 s or 999999.9 h	9999 h 59 min 59 s or 999999.9 h

Subject to modification in technic and design. Errors and omissions excepted.

chanhvinh.com

Time and hours meters electronic

Count input for PNP, NPN or AC logic

Display LCD, 8-digits, coded time range

ISI34, ISI35

Part number

ISI34.01 | | **A** | | **01** |

- Display
  - A Not backlit
  - B Backlit
- Design
  - 0 NPN
  - 1 PNP
  - 3 AC/DC

ISI35.01 | | **A** | | **01** |

- Display
  - A Not backlit
  - B Backlit
- Design
  - 0 NPN
  - 1 PNP
  - 3 AC/DC

Connection diagram

DC, NPN

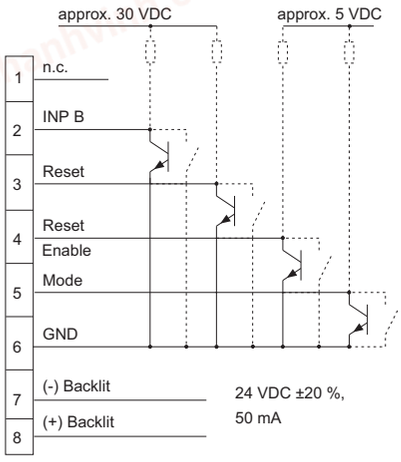

DC, PNP

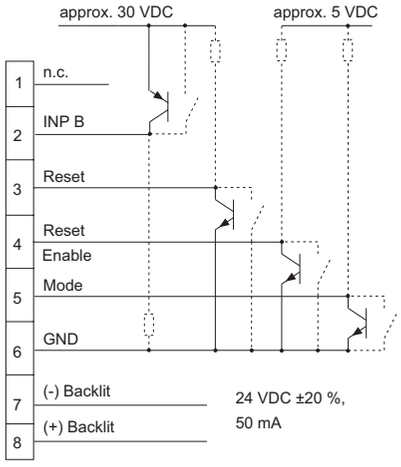

AC/DC

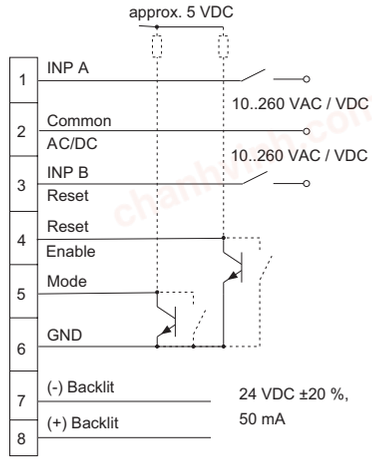

Subject to modification in technic and design. Errors and omissions excepted.

chanhvinh.com

Time and hours meters electronic

Count input for PNP, NPN or AC logic
Display LCD, 8-digits, coded time range

ISI34, ISI35

Trigger level

Input NPN input	Input circuit Comparator (pin 2)
Input level Low	0...0.7 VDC
Input level High	3...30 VDC
Input resistance	1 MΩ

PNP input	Comparator (pin 2)
Input level Low	0...0.7 VDC
Input level High	4...30 VDC
Input resistance	100 kΩ

AC/DC inputs	Optocoupler (pin 1 + 3)
Input level Low	0...2 VAC/VDC
Input level High	10...260 VAC/VDC
Input resistance	160 kΩ
Min. pulse time	16 ms

Reset input for DC-Version NPN reset input	Pin 3
Input level Low	0...0.7 VDC
Input level High	3...30 VDC
Input resistance	2,2 MΩ
Min. pulse time	50 ms

NPN control inputs	Pin 4 + 5
Input level Low	0...0.7 VDC
Input level High	3...5 VDC
Input resistance	2.2 MΩ

Dimensions

ISI34, ISI35

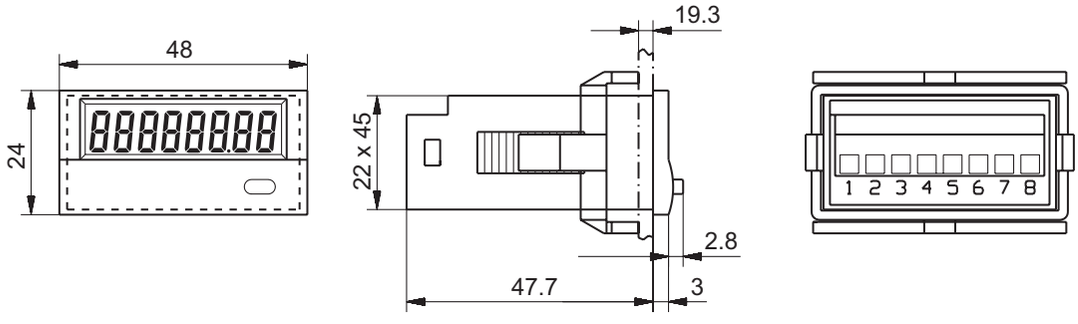

Front frame for screw/clip mount (included with delivery)

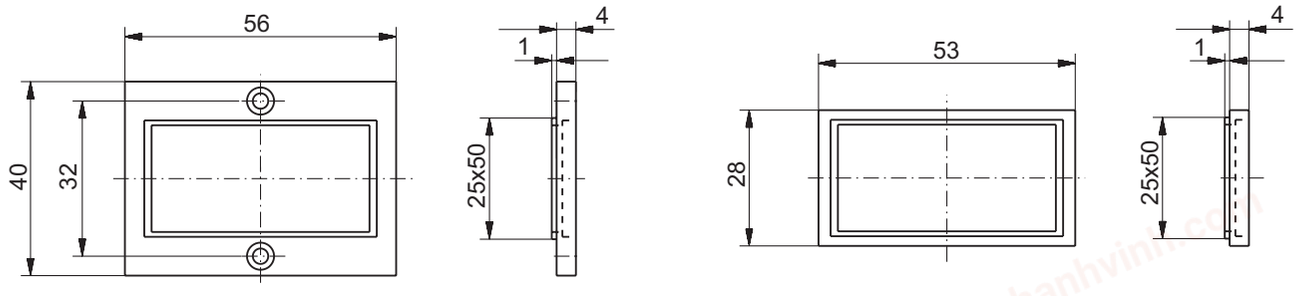

Subject to modification in technic and design. Errors and omissions excepted.