chanhvinh.com

Totalizers mechanic

Stroke, piece and revolution counters
Display 4- or 5-digits, reset button

H 127, T 127, U 127



H 127 - Stroke counter



T 127 - Piece counter with lever



U 127 - Revolution counter

Features

- **Stroke, piece and revolution counters**
- **Adding**
- **Display 5-digits (H 127, U 127)**
- **Display 4-digits (T 127)**
- **Manual reset by knurled knob**

Technical data - mechanical design

Display	White numbers on black
Digit height	4.5 mm
Reset	Reset by knurled knob
Ambient temperature	0...+60 °C
Housing type	Surface mount housing with mounting plate
Housing colour	Grey
Dimensions W x H x L	40 x 29 x 27.5 mm
Dimensions mounting plate	40 x 46 mm
Mounting	Base plate, 2 long mounting holes
Weight approx.	90 g
Materials	Housing: Hostaform POM, grey Base blate: steel zinc-coated

Subject to modification in technic and design. Errors and omissions excepted.

chanhvinh.com

Totalizers mechanic

Stroke, piece and revolution counters
Display 4- or 5-digits, reset button

H 127, T 127, U 127

Technical data - mechanical design

H 127	
Function	Stroke counter
Number of digits	5 digits
Count mode	Adding in a stroke direction to be indicated. 1 stroke = 1 count
Drive shaft	Right or left, ø4 mm
Stroke	>38° to <60°
Stroke lever	To be positioned on shaft at will. Stroke lever relocates automatically to start position.
Stroke frequency	≤500 strokes/min
Measuring range	99 999
T 127	
Function	Piece counter with lever
Number of digits	4-digits
Count mode	1 button touch = 1 count
Drive shaft	Only available with lever provided at right
Stroke	>38° to <60°
Measuring range	9999
U 127	
Function	Revolution counter
Number of digits	5 digits
Count mode	Adding in a rotational direction to be indicated, subtracting in reverse direction. 1 rev. = 1 count
Drive shaft	Right or left, ø4 mm
Operating speed	≤2000 rpm
Measuring range	99 999

Direction of strokes and rotation

Drive on the right

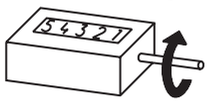

Reset button left
Away from user
Sense of rotation or stroke direction I

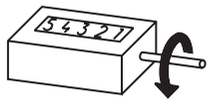

Reset button left
Toward user
Sense of rotation or stroke direction II

Drive on the left

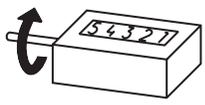

Reset button right
way from user
Sense of rotation or stroke direction I

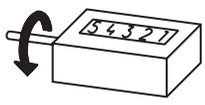

Reset button right
Toward user
Sense of rotation or stroke direction II

Reset button always opposite of drive.

Subject to modification in technic and design. Errors and omissions excepted.

chanhvinh.com

Totalizers mechanic

Stroke, piece and revolution counters

Display 4- or 5-digits, reset button

H 127, T 127, U 127

Part number

Stroke counter

H 127.0 [ ] [0] [A] [ ] [ ]

Display / direction of stroke
- G 5 digits 99 999 / I
- H 5 digits 99 999 / II

Count mode / drive
- 01 1 stroke = 1 digit / drive shaft at right
- 02 1 stroke = 1 digit / drive shaft at left

Housing
- A Surface mount housing, grey

Reset
- 1 Reset button at left
- 2 Reset button at right

Piece counter

T 127. [001]

Design
- 001 Display 4-digits, stroke direction II, Reset button left, 1 stroke = 1 digit Housing grey, surface mount

Revolution counter

U 127.0 [ ] [0] [A] [ ] [ ]

Display / direction of rotation
- G 5 digits 99 999 / I
- H 5 digits 99 999 / II

Count mode / drive
- 01 1 revolution = 1 digit / drive shaft at right
- 02 1 revolution = 1 digit / drive shaft at left

Housing
- A Surface mount housing, grey

Reset
- 1 Reset button at left
- 2 Reset button at right

Subject to modification in technic and design. Errors and omissions excepted.

chanhvinh.com

Totalizers mechanic

Stroke, piece and revolution counters
Display 4- or 5-digits, reset button

H 127, T 127, U 127

Dimensions

H 127, U 127

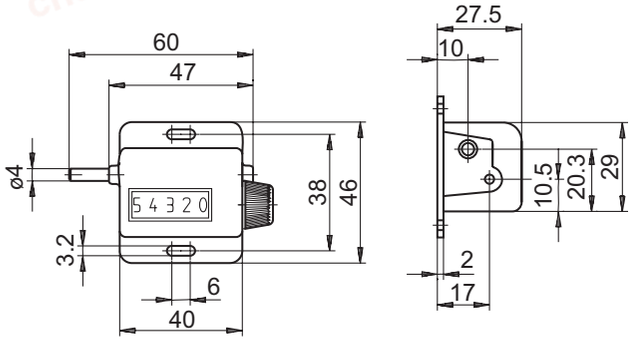

Stroke lever and stroke

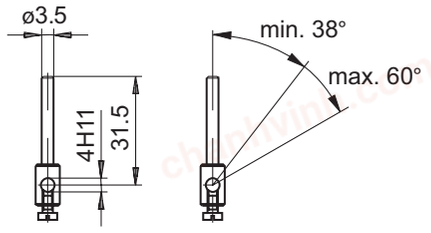

T 127

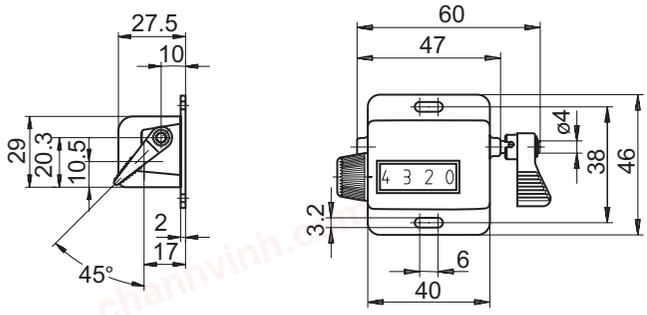

Subject to modification in technic and design. Errors and omissions excepted.
8/6/2011