chanhvinh.com

Female connector M12 x 1 with attached TPE-cable, Food & Beverage

dimension drawing

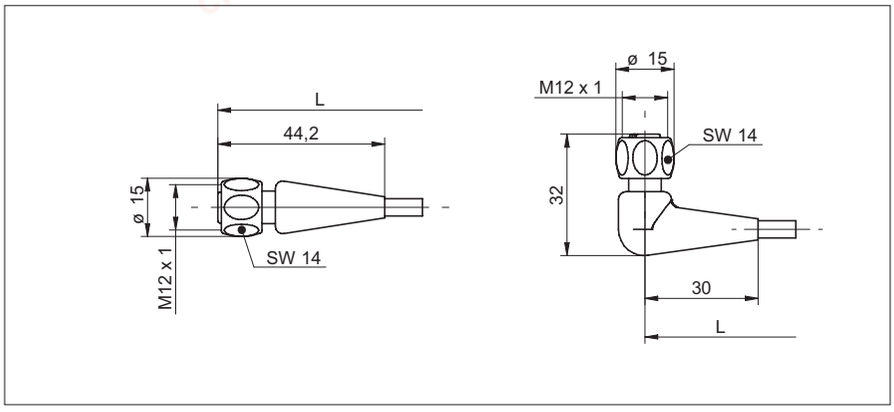

- 4-wire
- TPE halogen-free
- suitable for flexible cable carriers
- self-locking cap nut

FDA ECOLAB

General data	
Nominal current I_N	4 A
Nominal voltage U_N	250 V
Number of positions	4
Volume resistance	≤ 5 mΩ
Insulation resistance	≥ 100 MΩ
Length of cable	See listing
Stripping length of the free conductor end	0 mm (cable cut flush to length with no conductor preparation)
Ambient temperature (operation)	-40 ... +105 °C

General characteristics	
Coding	A-standard
Pollution degree	3
Degree of protection	IP65, IP67, IP68, IP69
Contact material	Metal, CuZn
Contact surface material	Gold-plated
Contact carrier material	Plastic, PP, GY
Material of grip body	Plastic, PP, GY
Coupling nut material	Stainless steel, V4A
Sealing material	EPDM
Mechanical life-cycle	>100 mating cycles

Conductor data	
Cable type	TPE halogen-free
Conductor cross section	0,34 mm²
AWG signal line	22
Conductor structure, signal line	42x0,10 mm
Core diameter	1,27 ± 0.02 mm
Thickness, insulation	ca. 0,25 mm
External cable diameter	4,6 ± 0,15 mm
Wire colors	Brown, white, blue, black
External sheath, color	Light grey, similar RAL7035

type	Mat.-No.	length
straight		
ESG 34AY0200	11166444	2 m
ESG 34AY0500	11166445	5 m
ESG 34AY1000	11166446	10 m
ESG 34AY2500	11166447	25 m
angular		
ESW 33AY0200	11166448	2 m
ESW 33AY0500	11166449	5 m
ESW 33AY1000	11166450	10 m
ESW 33AY2500	11166451	25 m

other lengths on request

pin assignment

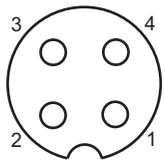

1 = BN
2 = WH
3 = BU
4 = BK

01.06.2016

Baumer Electric AG P.O. Box Hummelstrasse 17 CH-8501 Frauenfeld Phone +41 (0)52 728 11 22 Fax +41 (0)52 728 11 44 www.baumer.com

chanhvinh.com

Female connector M12 x 1 with attached TPE-cable, Food & Beverage

Conductor data (cont.)	
Nominal voltage, conductor	≤ 240 V_{AC}
Test voltage, conductor	≥ 2000 V
Outer sheath, material	TPE
Material conductor insulation	TPE
Conductor material	Cu-ETP1 baresoft
Smallest bending radius, movable installation	46 mm
Bending radius fixed	23 mm
No. of cycles	≥ 4 mio.
Traversing permitted	≤ 10 m at max. acceleration
Permissible speed at horizontal traverse (5m)	≤ 180 m/min
Acceleration	≤ 10 m/s^2
Ambient temperature (operation)	-40 ... +105 °C (cable, fixed installation)
	-25 ... +105 °C (cable, flexible installation)
	-25°C…+60°C (drag chain)
Special properties	seawater resistant, recyclable, LABS free, RoHs compliant, ozone resistant, UV resistant, hydrolysis proof, drag chain-adapted, torsion resistant, halogen free, excellent acid- and alkali resistant, verified resistance against P3-topactive, flexibility at low temperature, increased thermal load

Baumer Electric AG P.O. Box Hummelstrasse 17 CH-8501 Frauenfeld Phone +41 (0)52 728 11 22 Fax +41 (0)52 728 11 44 www.baumer.com