chanhvinh.com



# Connector M8 x 1 with attached PUR-cable, shielded

## dimension drawing

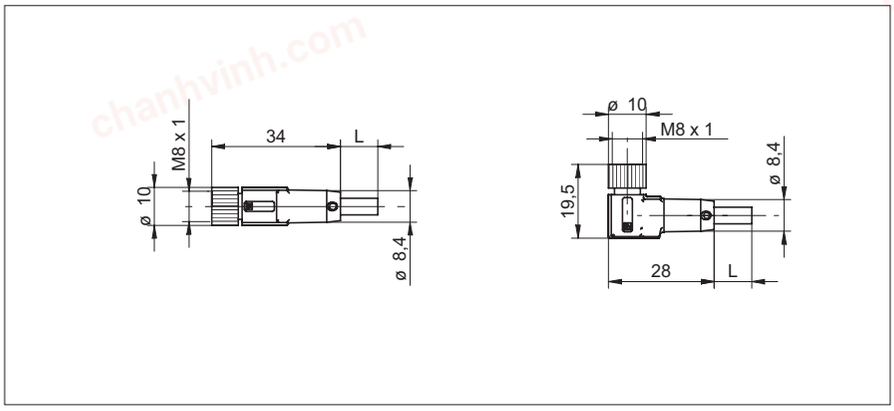


- 4-wire, shielded
- shield connected with cap-nut
- PUR halogen-free
- suitable for flexible cable carriers
- self-locking cap nut
- UL listing file No. E315836

| General data | |
|---|---|
| Nominal current $I_N$ | 4 A |
| Nominal voltage $U_N$ | 30 V |
| Number of positions | 4 |
| Volume resistance | ≤ 5 mΩ |
| Insulation resistance | ≥ 100 MΩ |
| Length of cable | see listing |
| Stripping length of the free conductor end | 50 mm |
| Ambient temperature (operation) | -25 ... 90 °C |

| General characteristics | |
|---|---|
| Coding | A-standard |
| Surge voltage category | II |
| Pollution degree | 3 |
| Degree of protection | IP65/IP67 |
| Contact material | CuSn |
| Contact surface material | Ni/Au |
| Contact carrier material | TPU GF |
| Material of grip body | TPU, hardly inflammable, self-extinguishing |
| Material, knurls | Zinc die-cast, (nickel-plated) |
| Sealing material | NBR |
| Status display | no |

| Conductor data | |
|---|---|
| Cable type | PUR halogen-free black, shielded |
| Cable abbreviation | |
| Conductor cross section | 0,25 mm² |
| AWG signal line | 24 |
| Conductor structure, signal line | 32x0,10 mm |
| Core diameter including insulation | 1,17 mm ±0,02 mm |
| External cable diameter | 4,7 ±015 mm |
| Wire colors | Brown, white, blue, black |
| External sheath, color | Black-gray RAL 7021 |

| type | Mat.-No. | length |
|---|---|---|
| **straight connectors** | | |
| ESG 32AH0200G | 10163693 | 2 m |
| ESG 32AH0500G | 10148326 | 5 m |
| ESG 32AH1000G | 11003568 | 10 m |
| **angular connectors** | | |
| ESW 31AH0200G | 11010528 | 2 m |
| ESW 31AH0500G | 10148328 | 5 m |
| ESW 31AH1000G | 10134059 | 10 m |
| other lengths on request | | |

## pin assignment

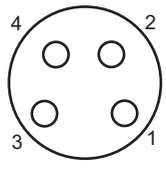


1 = BN
2 = WH
3 = BU
4 = BK

09.07.2019



Baumer Electric AG P.O. Box Hummelstrasse 17 CH-8501 Frauenfeld Phone +41 (0)52 728 11 22 Fax +41 (0)52 728 11 44 www.baumer.com
Drawn: 21.02.11/in Checked: 22.02.11/zi Released: 22.02.11/zi Last change: 09.07.2019/bons

chanhvinh.com



# Connector M8 x 1 with attached PUR-cable, shielded

| **Conductor data** (cont.) | |
|---|---|
| Conductor resistance | ≤ 78 Ω/km |
| Nominal voltage, conductor | 300 V |
| Test voltage, conductor | 3000 V |
| Overall twist | 4 wires, twisted |
| Outer sheath, material | PUR |
| Conductor material | Bare Cu litz wires |
| Cable weight | 36 kg/km |
| Smallest bending radius, movable installation | 50 mm |
| Number of bending cycles | 4‘000‘000 |
| Bending radius | 50 mm |
| Traversing path | 10 m |
| Traversing rate | 3 m/s |
| Acceleration | 10 m/s² |
| Ambient temperature (operation) | -40 ... 80 °C (cable, fixed installation) |
| | -5 ... 80 °C (cable, flexible installation) |
| Special properties | Flexible cable conduit capable |
| | Silicone-free |
| | Free of substances which would hinder coating with paint or varnish |
| Flame resistance | As per UL-Style 20549 |
| Halogen-free | As per DIN VDE 0472 part 815 |
| Resistance to oil | complying with DIN EN 60811-2-1 |
| Other resistance | Highly resistant to acids, alkaline solutions and solvents |
| | hydrolysis and microbe resistant |
| | |



Baumer Electric AG P.O. Box Hummelstrasse 17 CH-8501 Frauenfeld Phone +41 (0)52 728 11 22 Fax +41 (0)52 728 11 44 www.baumer.com
Drawn: 21.02.11/in Checked: 22.02.11/zi Released: 22.02.11/zi Last change: