chanhvinh.com

Absolute encoders - analog

Blind hollow shaft

Magnetic single- or multiturn encoders

EAM580R-B - analog - *MAGRES*



EAM580R with hollow shaft

Features

- **Encoder single- or multiturn / Analog**
- **ISO 13849 compliant firmware**
- **E1 compliant design**
- **High protection up to IP 67**
- **High resistance to shock and vibrations**
- **Protection against corrosion C5-M**
- **Wire cross section 0.5 mm²**
- **Teach input for adjustment of measuring range**

Technical data - electrical ratings

Voltage supply	8...30 VDC 14...30 VDC
Reverse polarity protection	Yes
Consumption typ.	20 mA (24 VDC, w/o load)
Initializing time	≤170 ms after power on
Response time	<1 ms
Interface	Analog 0...10 V / 0.5...4.5 V / 4...20 mA / Resolution: 12 bit
Function	Multiturn, Singleturn
Teach range	5°...359.9° (singleturn), 5°...32767 turns (multiturn)
Absolute accuracy	±0.15 ° (+20 ±15 °C) ±0.25 ° (-40...+85 °C) sensor
Accuracy analog output	±0.5 % of whole measuring range (-40...+85 °C)
Sensing method	Magnetic
Interference immunity	DIN EN 61000-6-2 ISO 11452-2:2004* / -5:2002* ISO 7637-2:2004* ISO 10605:2008 + Amd 1:2014 (CD ±8 kV / AD ±15 kV) * Severity level according to ECE R10 (Rev. 4)
Emitted interference	DIN EN 61000-6-4 CISPR 25:2008 (30..1000 MHz) ISO 7637-2:2004* * Severity level according to ECE R10 (Rev. 4)
Programmable parameters	Measuring range teachable
Diagnostic function	DATAVALID
Factory setting	360° and 10 revolutions (other on request)

Technical data - mechanical design

Size (flange)	ø58 mm
Shaft type	ø10...15 mm (blind hollow shaft)
Protection DIN EN 60529	IP 67 (with shaft seal)
Operating speed	≤6000 rpm
Starting torque	≤2.5 Ncm (+20 °C, IP 67)
Materials	Housing: steel, powder-coated Flange: aluminium Hollow shaft: stainless steel
Corrosion protection	IEC 60068-2-52 Salt mist for ambient conditions C5-M (CX) according to ISO 12944-2
Operating temperature	-40...+85 °C (see general information)
Relative humidity	95 %
Resistance	DIN EN 60068-2-6 Vibration 30 g, 10-2000 Hz DIN EN 60068-2-27 Shock 500 g, 1 ms
Weight approx.	250 g
Connection	Flange connector M12, 5-pin Cable 2 m
Instruction	Use in safety functions exclusively based on Application Note and MTTFd reliability prediction (request separately).

Subject to modification in technic and design. Errors and omissions excepted.
25/4/2019

chanhvinh.com

Absolute encoders - analog

Blind hollow shaft

Magnetic single- or multiturn encoders

EAM580R-B - analog - *MAGRES*

Part number

EAM580R-B | | | **.** | **7** | | | **.** | | **1** | **.A** |

Output characteristics
1 Increasing CW

Measuring range
A360 0°...360°
A36A 0°...3600°

Voltage supply / signals
V3 8...30 VDC / Output 0.5...+4.5 VDC
V1 14...30 VDC / Output 0...+10 VDC
C4 14...30 VDC / Output 4...20 mA

Connection
N Flange connector M12, 5-pin, radial, male contacts, CCW
L Cable 2 m, radial

Protection
7 IP 67

Specification hollow shaft
A ø10 mm, clamping ring at A side
C ø12 mm, clamping ring at A side
E ø14 mm, clamping ring at A side
F ø15 mm, clamping ring at A side

Flange
N Without stator coupling
A With stator coupling ø68 mm
E Torque pin 5 mm, axial

Subject to modification in technic and design. Errors and omissions excepted.

chanhvinh.com

Absolute encoders - analog

Blind hollow shaft

Magnetic single- or multiturn encoders

EAM580R-B - analog - *MAGRES*

Accessories

Connectors and cables

10153968	Female connector M12, 5-pin, straight, without cable
11046266	Female connector M12, 5-pin, straight, shielded, 5 m cable
10156842	Cable with male/female M12, 5-pin, angled, A-coded, 5 m
11144306	Cable with male/female M12, 5-pin, straight, A-coded, 5 m

General information

Self-heating interrelated to speed, protection, attachment method and ambient conditions as well electronics and supply voltage must be considered for precise thermal dimensioning. Self-heating is supposed to approximates 12 K (IP 67 protection) per 1000 rpm. Operating the encoder close to the maximum limits requires measuring the real prevailing temperature at the encoder flange.
For the current output (version C4), a load >470 Ohm must be selected when supplied with 24 VDC in order to minimize the self-heating of the encoder and not to exceed the maximum operating temperature.
For cable lengths >2 m, a current output (version C4) is to be preferred due to the voltage drop in order to avoid effects on the accuracy.

Terminal assignment

Cable / Flange connector M12, 5-pin

Pin	Core color	Signals	Description
1	white	0 V	Supply voltage
2	brown	+Vs	Supply voltage
3	green	Uout/Iout	Analog output
4	yellow	DV	DATAVALID output
5	grey	Teach	Teach input

Cable data: 5 x 0.5 mm²

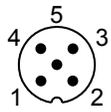

Terminal significance

Iout	Current output Load: <500 Ω
Uout	Voltage output Current output: max. 10 mA Load resistor: >1 kΩ between Uout / 0 V (version 0...10 V) >2 kΩ (version 0.5...4.5 V)
Teach	Teach in Maximum 0...+Vs Level LOW: <1 V Level HIGH: >2.1 V
DV	Diagnostic output/Teach output Function normal operation: DATAVALID (Diagnostic output) Type NPN output, Pull-Up 10 kΩ integrated - No error: HIGH - Error: LOW Function teach process: Teach status

Subject to modification in technic and design. Errors and omissions excepted.

chanhvinh.com

Absolute encoders - analog

Blind hollow shaft

Magnetic single- or multiturn encoders

EAM580R-B - analog - *MAGRES*

Output signals

Singleturn

Default: CW, 360°, rotating direction and measuring range teachable.

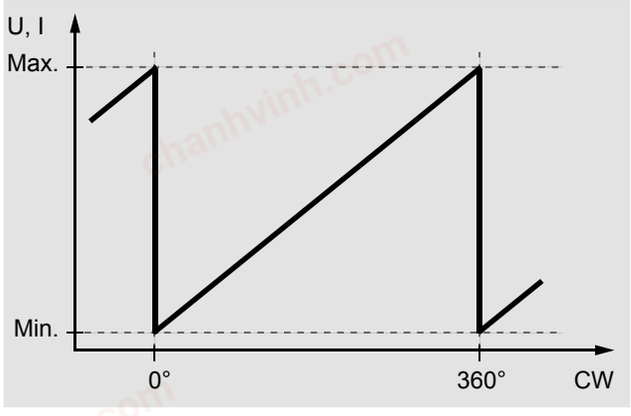

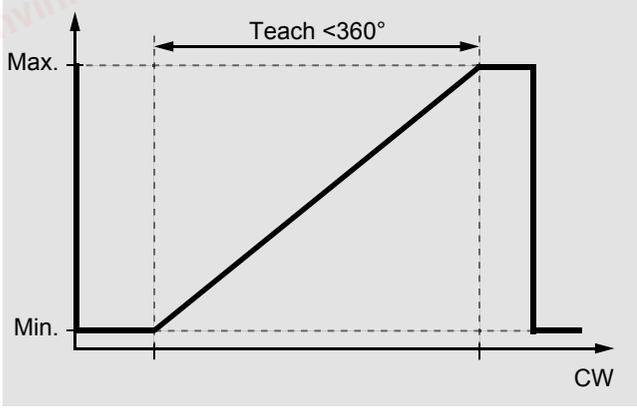

Multiturn

Default: CW, 10 turns, rotating direction and measuring range teachable (max. 32767 turns).

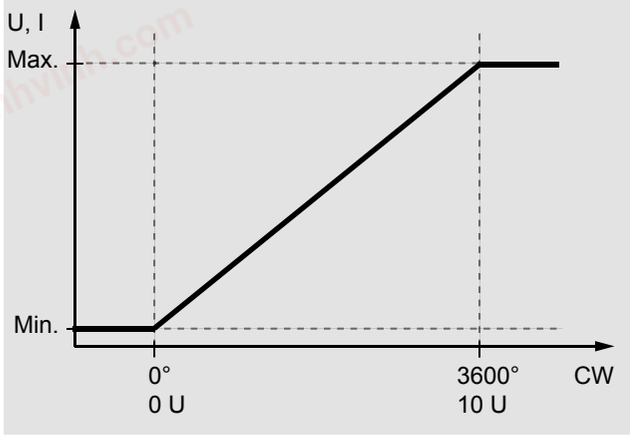

Note: The encoder can be mounted at a specific position and set to position 1 by means of factory preset.

Teach process

Activate teach process

Start teach process within 5 minutes after power on. Set teach input for >5 seconds on HIGH and afterwards on LOW level.
DV/Status output: Oscillates after 5 seconds.

Position 1

Get encoder on position intended for min. voltage output / current output. Set teach input for >0.1 seconds on HIGH.
DV/Status output: Switches to HIGH level for 3 seconds and flashes shortly.

Position 2

Get encoder on position intended for max. voltage output / current output. Set teach input for >0.1 seconds on HIGH.
DV/Status output: Switches to HIGH level for 3 seconds and flashes shortly. If measuring range is exceeded or the limits are too close to each other, the teaching process was not successful and has to be repeated.

Default

Set teach input for >15 seconds on HIGH.
DV/Status output: Oscillates after 5 seconds.

Subject to modification in technic and design. Errors and omissions excepted.

chanhvinh.com

Absolute encoders - analog

Blind hollow shaft

Magnetic single- or multiturn encoders

EAM580R-B - analog - *MAGRES*

Dimensions

EAM580R, cable with stator coupling

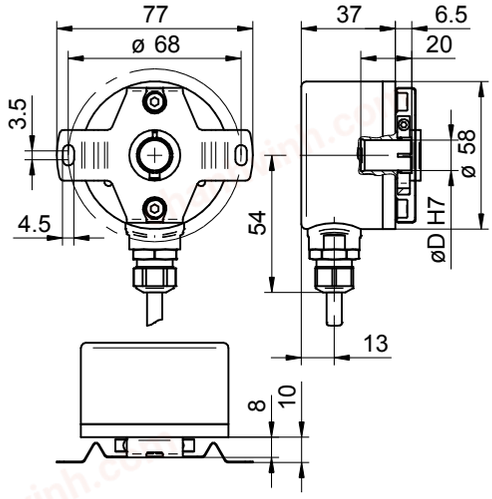

EAM580R, M12 with stator coupling

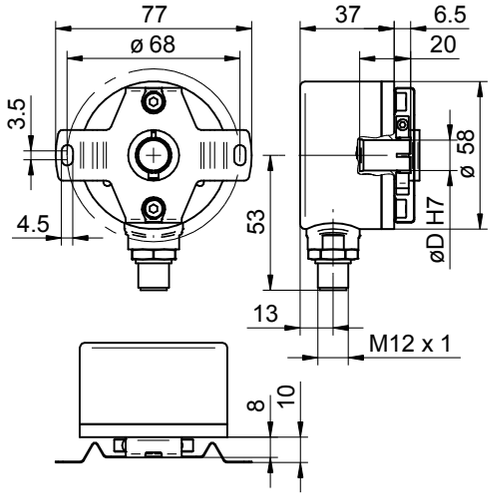

EAM580R, cable w/o stator coupling

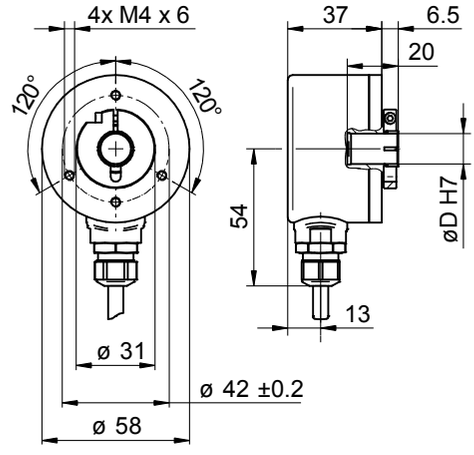

EAM580R, M12 w/o stator coupling

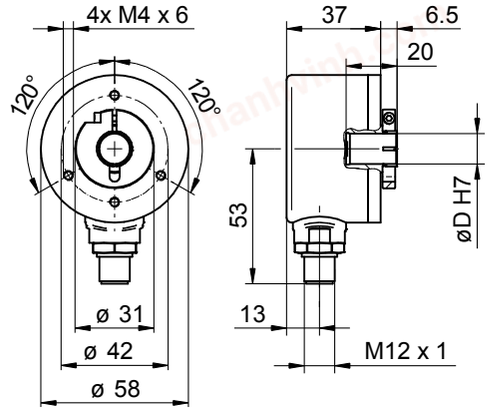

chanhvinh.com

Subject to modification in technic and design. Errors and omissions excepted.

chanhvinh.com

EAM580R-B - analog - *MAGRES*

Dimensions

EAM580R, torque pin

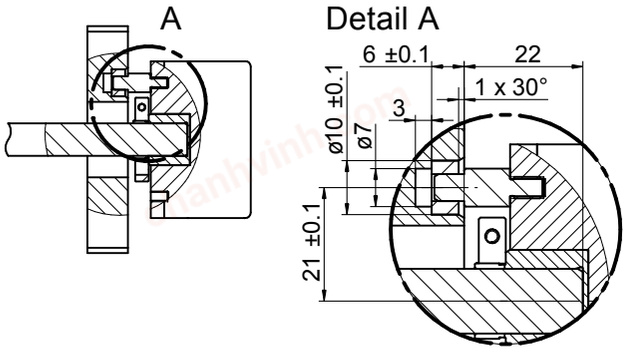

Subject to modification in technic and design. Errors and omissions excepted.
25/4/2019