chanhvinh.com

Absolute encoders - SSI

Blind hollow shaft

Magnetic single- or multiturn encoders 14 bit ST / 18 bit MT

EAM580-B - SSI - *MAGRES*



EAM580 with hollow shaft

Features

- **Encoder single- or multiturn / SSI**
- **Precise magnetic sensing**
- **Resolution max. 32 bit (14 bit ST, 18 bit MT)**
- **Angular accuracy up to ±0.15°**
- **Additional incremental signals**
- **High protection up to IP 67**
- **High resistance to shock and vibrations**

Optional

- **Protection against corrosion C5-M**

Technical data - electrical ratings

Voltage supply	4.5…30 VDC (SSI, SSI + TTL/ RS422) 5.5…30 VDC (SSI + HTL/ Push-pull)
Consumption typ.	60 mA (5 VDC, w/o load) 20 mA (24 VDC, w/o load)
Initializing time	≤170 ms after power on
Data currency	Typ. 2 µs (cyclic request)
Interfaces	SSI, SSI + incremental
Function	Multiturn, Singleturn
Operating mode	Linear feedback shift register (on request)
Steps per revolution	≤16384 / 14 bit
Number of revolutions	≤262144 / 18 bit
Absolute accuracy	±0.15 ° (+20 ±15 °C) ±0.25 ° (-40...+85 °C)
Sensing method	Magnetic
Code	Gray or binary
Code sequence	CW: ascending values with clockwise sense of rotation; looking at flange
Inputs	SSI clock: Linereceiver RS422 Zero setting input Counting direction
Output stages	SSI data: Linedriver RS422 Incremental: linedriver RS422 or push-pull (option)
Incremental output	1024, 2048, 4096 ppr (other on request)
Output signals	A+, A-, B+, B-
Output frequency	≤350 kHz
Interference immunity	DIN EN 61000-6-2
Emitted interference	DIN EN 61000-6-4
Diagnostic function	DATAVALID (on request)

Technical data - mechanical design

Size (flange)	ø58 mm
Shaft type	ø10...15 mm (blind hollow shaft)
Protection DIN EN 60529	IP 65 (without shaft seal), IP 67 (with shaft seal)
Operating speed	≤6000 rpm
Starting torque	≤2 Ncm (+20 °C, IP 65) ≤2.5 Ncm (+20 °C, IP 67)
Materials	Housing: steel zinc-coated Flange: aluminium Hollow shaft: stainless steel
Operating temperature	-40...+85 °C (see general information)
Relative humidity	95 %
Resistance	DIN EN 60068-2-6 Vibration 30 g, 10-2000 Hz DIN EN 60068-2-27 Shock 500 g, 1 ms
Weight approx.	250 g
Connection	Flange connector M12, 8-pin Flange connector M12, 12-pin Flange connector M23, 12-pin Cable 2 m

Subject to modification in technic and design. Errors and omissions excepted.

chanhvinh.com

Absolute encoders - SSI

Blind hollow shaft

Magnetic single- or multiturn encoders 14 bit ST / 18 bit MT

EAM580-B - SSI - *MAGRES*

Part number

EAM580-B | | | . | | | | . | | | | **.A**

Resolution incremental signals
- 0 Without incremental signals
- H 4096 pulses, TTL (RS422)
- 8 2048 pulses, TTL (RS422)
- 5 1024 pulses, TTL (RS422)

Resolution multiturn
- 00 No option
- 12 12 bit
- 13 13 bit
- 16 16 bit
- 18 18 bit

Resolution singleturn
- 12 12 bit
- 13 13 bit
- 14 14 bit

Voltage supply / signals
- 4B 4.5...30 VDC / SSI binary
- 4G 4.5...30 VDC / SSI gray

Connection
- B Flange connector M12, 8-pin, radial, male contact, CCW
- K Flange connector M12, 12-pin, radial, male contact, CCW
- F Flange connector M23, 12-pin, radial, male, CCW
- L Cable 2 m, radial

Protection
- 5 IP 65
- 7 IP 67

Specification hollow shaft
- A ø10 mm, clamping ring at A side
- C ø12 mm, clamping ring at A side
- E ø14 mm, clamping ring at A side
- F ø15 mm, clamping ring at A side

Flange
- N Without stator coupling
- A With stator coupling ø68 mm
- E Torque pin 5 mm, axial

Subject to modification in technic and design. Errors and omissions excepted.
25/4/2019

chanhvinh.com

Absolute encoders - SSI

Blind hollow shaft

Magnetic single- or multiturn encoders 14 bit ST / 18 bit MT

EAM580-B - SSI - *MAGRES*

Accessories

Connectors and cables

10146775	Female connector M12, 8-pin, straight, without cable
11170528	Female connector M12, 8-pin, straight, shielded, 5 m cable (ESG 34FH0500GVS)
11177375	Female connector M12, 8-pin, straight, shielded, 10 m cable (ESG 34FH1000GVS)
11091511	Female connector M12, 8-pin, straight, shielded, 20 m cable
10116717	Female connector M23, 12-pin, straight, without cable
11078614	Female connector M12, 12-pin, straight, without cable
11048452	Female connector M12, 12-pin, straight, shielded, 2 m cable (ESG 34JP0200G)
11043780	Female connector M12, 12-pin, straight, shielded, 5 m cable (ESG 34JP0500G)
11048455	Female connector M12, 12-pin, straight, shielded, 10 m cable (ESG 34JP1000G)

General information

Self-heating interrelated to speed, protection, attachment method and ambient conditions as well electronics and supply voltage must be considered for precise thermal dimensioning. Self-heating is supposed to approximates 6 K (IP 65 protection) respectively 12 K (IP 67 protection) per 1000 rpm. Operating the encoder close to the maximum limits requires measuring the real prevailing temperature at the encoder flange.

Terminal significance

SET	Zero setting. Input for zero setting at any position. The zero setting operation is triggered by a high pulse and has to be in line with the selected direction of rotation (DIR). Impulse duration >100 ms. Connect to 0 V after zero setting for maximum intereference immunity.
DIR	Counting direction input. CW HIGH - CCW LOW The input is standard on high. For maximum interference immunity connect to +Vs respectively 0 V depending on counting direction. (Version with DATAVALID does not include the counting directon input).

Subject to modification in technic and design. Errors and omissions excepted.
25/4/2019

chanhvinh.com

Absolute encoders - SSI

Blind hollow shaft

Magnetic single- or multiturn encoders 14 bit ST / 18 bit MT

EAM580-B - SSI - *MAGRES*

Data transfer

Output signal

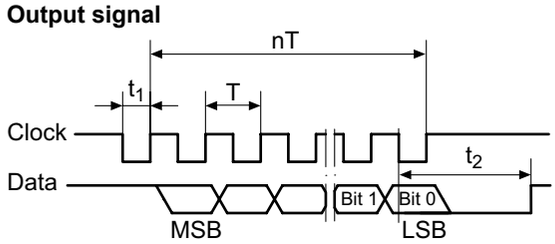

T = 0.5...10 µs	t_1 = 0.25...5 µs
t_2 = 20 ±2 µs	f max. = 2 MHz

Data acquisition time ta

Following timing of the SSI Masters is the requirement for a data refresh rate of typ. 2 µs. If this is not fulfilled the data refresh rate is <50 µs.

ta <5000 µs

ta jitter <±2 µs

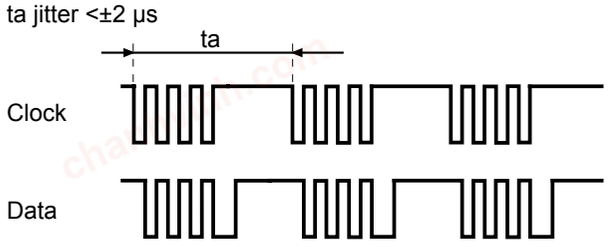

Trigger level

Control inputs	Input circuit
Maximal	0...+Vs
Input level Low	<1 V
Input level High	>2.1 V

RS422	
Output level High	>2.3 V
Output level Low	<0.5 V
Load	<20 mA

Push-pull	
Output level High	≥+VS -2.2 V
Output level Low	<0.7 V
Load	<20 mA

Applies to standard cable lengths up to 2 m, for longer cables the voltage drop must be taken into account.

Output signals

Incremental signals: clockwise rotating direction when looking at flange.

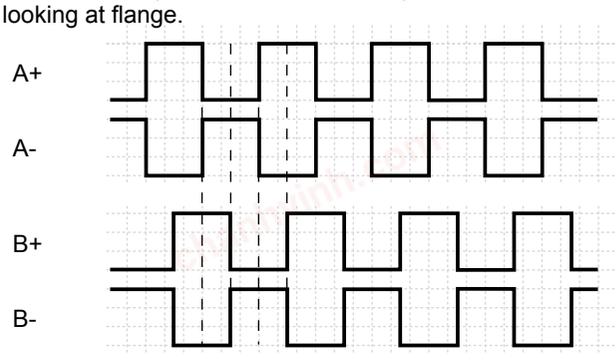

Subject to modification in technic and design. Errors and omissions excepted.
25/4/2019

chanhvinh.com

Absolute encoders - SSI

Blind hollow shaft

Magnetic single- or multiturn encoders 14 bit ST / 18 bit MT

EAM580-B - SSI - *MAGRES*

Terminal assignment

Cable / Flange connector M12, 8-pin / w/o incremental
for connection reference **-L** and **-B**

Pin	Core color	Signals	Description
1	white	0 V	Supply voltage
2	brown	+Vs	Supply voltage
3	green	Clock+	Clock signal
4	yellow	Clock-	Clock signal
5	grey	Data+	Data signal
6	pink	Data-	Data signal
7	blue	SET	Zero setting input
8	red	DIR	Counting direction input
Screen	connected to housing		
Cable data: 4 x 2 x 0.14 mm², twisted in pairs			

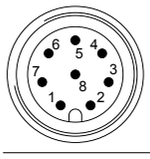

Male, A-coded

Cable / Flange connector M12, 12-pin / with incremental
for connection reference **-L** and **-K**

Pin	Core color	Signals	Description
1	brown	+Vs	Supply voltage
2	blue	SET	Zero setting input
3	white	0 V	Supply voltage
4	green	Clock+	Clock signal
5	pink	Data-	Data signal
6	yellow	Clock-	Clock signal
7	black	A+	Incremental signal
8	grey	Data+	Data signal
9	red	DIR	Counting direction input
10	violet	A-	Incremental signal
11	grey/pink	B+	Incremental signal
12	red/blue	B-	Incremental signal
Screen	connected to housing		
Cable data: 6 x 2 x 0.14 mm², twisted in pairs			

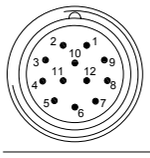

Male, A-coded

Flange connector M23, 12-pin / w/o incremental
for connection reference **-F**

Pin	Core color	Signals	Description
1	pink	Data-	Data signal
2	–	–	–
3	blue	SET	Zero setting input
4	red	DIR	Counting direction input
5	green	Clock+	Clock signal
6	yellow	Clock-	Clock signal
7	–	–	–
8	grey	Data+	Data signal
9	–	–	–
10	white	0 V	Supply voltage
11	–	–	–
12	brown	+Vs	Supply voltage
Screen	connected to housing		
Cable data: 4 x 2 x 0.14 mm², twisted in pairs			

Flange connector M23, 12-pin / with incremental
for connection reference **-F**

Pin	Core color	Signals	Description
1	brown	+Vs	Supply voltage
2	white	0 V	Supply voltage
3	green	Clock+	Clock signal
4	grey	Data+	Data signal
5	blue	SET	Zero setting input
6	pink	Data-	Data signal
7	yellow	Clock-	Clock signal
8	red/blue	B-	Incremental signal
9	red	DIR	Counting direction input
10	violet	A-	Incremental signal
11	black	A+	Incremental signal
12	grey/pink	B+	Incremental signal
Screen	connected to housing		
Cable data: 6 x 2 x 0.14 mm², twisted in pairs			

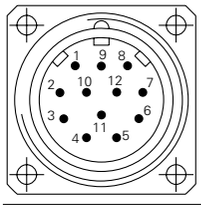

Subject to modification in technic and design. Errors and omissions excepted.
25/4/2019

chanhvinh.com

Absolute encoders - SSI

Blind hollow shaft

Magnetic single- or multiturn encoders 14 bit ST / 18 bit MT

EAM580-B - SSI - *MAGRES*

Dimensions

EAM580, cable with stator coupling

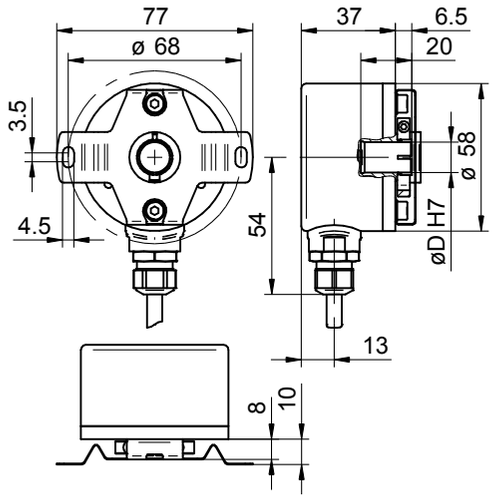

EAM580, M12 with stator coupling

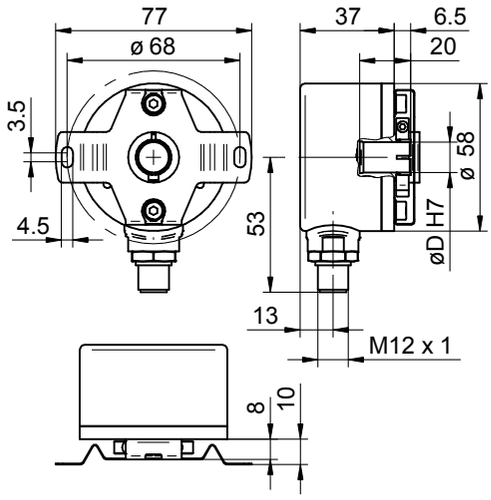

EAM580, M23 with stator coupling

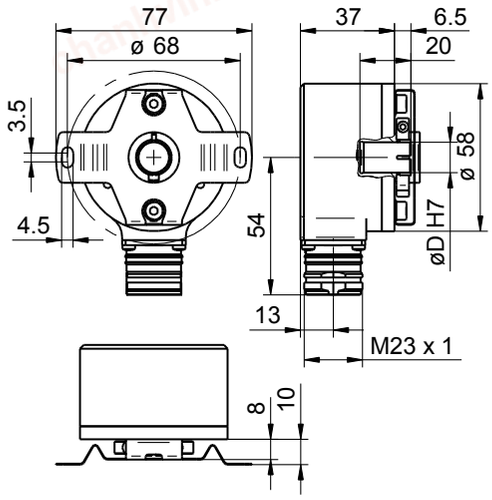

EAM580, cable w/o stator coupling

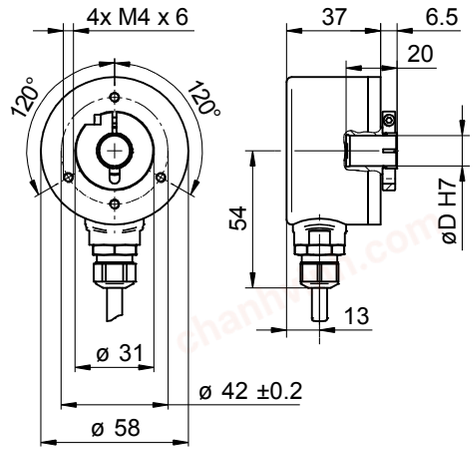

EAM580, M12 w/o stator coupling

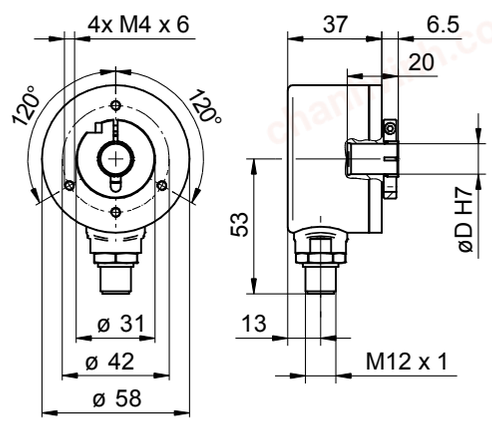

EAM580, M23 w/o stator coupling

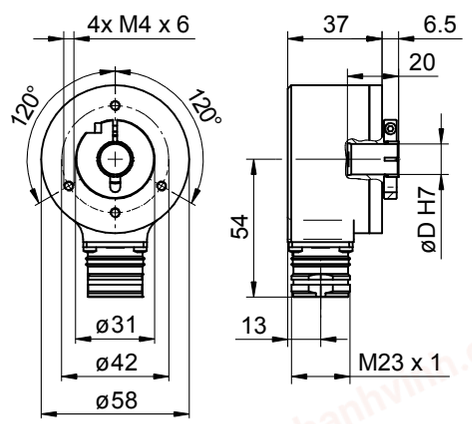

Subject to modification in technic and design. Errors and omissions excepted.

chanhvinh.com

Absolute encoders - SSI

Blind hollow shaft

Magnetic single- or multiturn encoders 14 bit ST / 18 bit MT

EAM580-B - SSI - *MAGRES*

Dimensions

EAM580, torque pin

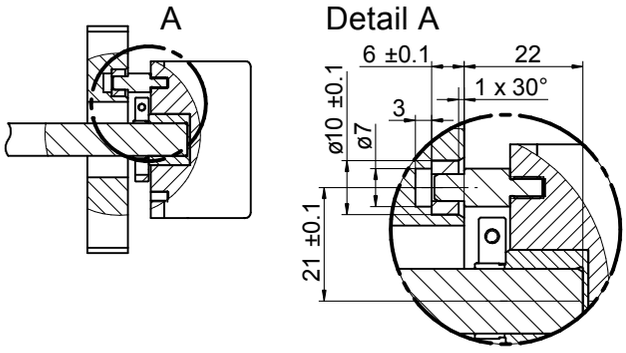

chanhvinh.com

Subject to modification in technic and design. Errors and omissions excepted.