chanhvinh.com

Absolute encoders - bus interfaces

Blind hollow shaft

Magnetic single- or multiturn encoders 14 bit ST / 18 bit MT

EAM580-B - CANopen® - *MAGRES*



EAM580 with hollow shaft

Features

- **Encoder single- or multiturn / CANopen®**
- **Precise magnetic sensing**
- **Angular accuracy up to ±0.15°**
- **Additional incremental signals**
- **High protection up to IP 67**
- **High resistance to shock and vibrations**
- **Electronic gear function**

Optional

- **Protection against corrosion C5-M**

Technical data - electrical ratings

Voltage supply	10...30 VDC
Consumption typ.	20 mA (24 VDC, w/o load)
Initializing time	≤170 ms after power on
Data currency	<1 ms
Interfaces	CANopen®, CANopen®-Lift, CANopen® + incremental
Function	Multiturn, Singleturn
Profile conformity	CANopen® CiA communication profile DS 301, LSS profile DSP 305, device profile DS 406, DS 417
Steps per revolution	≤16384 / 14 bit
Number of revolutions	≤262144 / 18 bit
Absolute accuracy	±0.15 ° (+20 ±15 °C) ±0.25 ° (-40...+85 °C)
Sensing method	Magnetic
Code sequence	CW: ascending values with clockwise sense of rotation; looking at flange
Output stages	CAN-Bus, LV (3.3 V) compatible ISO 11898 Incremental: linedriver RS422 or push-pull (option)
Incremental output	1024, 2048, 4096 ppr (other on request)
Output signals	A+, A-, B+, B-
Output frequency	≤350 kHz
Interference immunity	DIN EN 61000-6-2
Emitted interference	DIN EN 61000-6-4

Technical data - mechanical design

Size (flange)	ø58 mm
Shaft type	ø10...15 mm (blind hollow shaft)
Protection DIN EN 60529	IP 65 (without shaft seal), IP 67 (with shaft seal)
Operating speed	≤6000 rpm
Starting torque	≤2 Ncm (+20 °C, IP 65) ≤2.5 Ncm (+20 °C, IP 67)
Materials	Housing: steel zinc-coated Flange: aluminium Hollow shaft: stainless steel
Operating temperature	-40...+85 °C (see general information)
Relative humidity	95 %
Resistance	DIN EN 60068-2-6 Vibration 30 g, 10-2000 Hz DIN EN 60068-2-27 Shock 500 g, 1 ms
Weight approx.	250 g
Connection	Flange connector M12, 5-pin Flange connector M12, 8-pin Cable 2 m

Subject to modification in technic and design. Errors and omissions excepted.

chanhvinh.com

Absolute encoders - bus interfaces

Blind hollow shaft

Magnetic single- or multiturn encoders 14 bit ST / 18 bit MT

EAM580-B - CANopen® - *MAGRES*

Part number

EAM580-B | | | . | | | | . | **14** | | | **.A**

Resolution incremental signals
- 0 Without incremental signals
- H 4096 pulses, TTL (RS422)
- 8 2048 pulses, TTL (RS422)
- 5 1024 pulses, TTL (RS422)

Resolution multiturn
- 00 No option
- 18 18 bit

Resolution singleturn
- 14 14 bit

Voltage supply / signals
- C6 10...30 VDC / CANopen® (DS406)
- C7 10...30 VDC / CANopen®-Lift (DS417)

Connection
- B Flange connector M12, 8-pin, radial, male contact, CCW*
- N Flange connector M12, 5-pin, radial, male contacts, CCW
- L Cable 2 m, radial

Protection
- 5 IP 65
- 7 IP 67

Specification hollow shaft
- A ø10 mm, clamping ring at A side
- C ø12 mm, clamping ring at A side
- E ø14 mm, clamping ring at A side
- F ø15 mm, clamping ring at A side

Flange
- N Without stator coupling
- A With stator coupling ø68 mm
- E Torque pin 5 mm, axial

* Only available for CANopen with incremental signals

Subject to modification in technic and design. Errors and omissions excepted.
25/4/2019

chanhvinh.com

Absolute encoders - bus interfaces

Blind hollow shaft

Magnetic single- or multiturn encoders 14 bit ST / 18 bit MT

EAM580-B - CANopen® - *MAGRES*

Accessories

Connectors and cables

11046264	Female connector M12, 5-pin, straight, shielded, 2 m cable
11046266	Female connector M12, 5-pin, straight, shielded, 5 m cable
10127844	Female connector M12, 8-pin, straight, shielded, 2 m cable
11201509	Cable with male/female M12, 5-pin, straight, A-coded, 2 m (ESG 34C/KSG34C)
11201520	Cable with male/female M12, 5-pin, straight, A-coded, 5 m (ESG 34C/KSG34C)

Terminal assignment

Cable
for connection reference **-L**

Core colour	W/o incremental	With incremental
white	0 V	0 V
brown	+Vs	+Vs
green	CAN_H	CAN_H
yellow	CAN_L	CAN_L
grey	CAN_GND	A+
pink	n.c.	A-
blue	n.c.	B+
red	n.c.	B-
Screen: connected to housing		
Cable data: 4 x 2 x 0.14 mm²		

Flange connector M12, 5-pin
for connection reference **-N**

Pin	W/o incremental
1	CAN_GND
2	+Vs
3	0 V
4	CAN_H
5	CAN_L

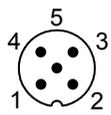

Flange connector M12, 8-pin
for connection reference **-B**

Pin	With incremental
1	0 V
2	+Vs
3	CAN_H
4	CAN_L
5	A+
6	A-
7	B+
8	B-

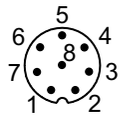

Subject to modification in technic and design. Errors and omissions excepted.

chanhvinh.com

Absolute encoders - bus interfaces

Blind hollow shaft

Magnetic single- or multiturn encoders 14 bit ST / 18 bit MT

EAM580-B - CANopen® - *MAGRES*

Output signals

Incremental signals: clockwise rotating direction when looking at flange.

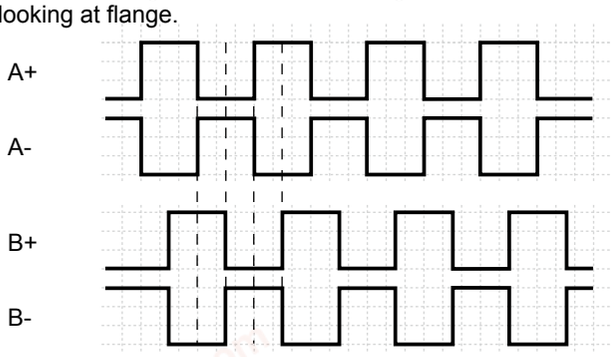

General information

Self-heating interrelated to speed, protection, attachment method and ambient conditions as well electronics and supply voltage must be considered for precise thermal dimensioning. Self-heating is supposed to approximates 6 K (IP 65 protection) respectively 12 K (IP 67 protection) per 1000 rpm. Operating the encoder close to the maximum limits requires measuring the real prevailing temperature at the encoder flange.

CANopen® features

Operating modes	Timer-driven (Event-Time) Synchronously triggered (Sync)
Node Monitoring	Heartbeat Node guarding
Programmable parameters	Operating modes Total resolution Scaling Electronic gear function
Diagnosis	Multiturn sensing Position error Temperature exceeding Speed exceeding
Default	50 kbit/s, Node ID 1 (DS406) 250 kbit/s, Node ID 4 (DS417)

Trigger level

RS422	
Output level High	>2.3 V
Output level Low	<0.5 V
Load	<20 mA

Push-pull	
Output level High	≥+VS -2.2 V
Output level Low	<0.7 V
Load	<20 mA

Applies to standard cable lengths up to 2 m, for longer cables the voltage drop must be taken into account.

Subject to modification in technic and design. Errors and omissions excepted.

chanhvinh.com

Absolute encoders - bus interfaces

Blind hollow shaft

Magnetic single- or multiturn encoders 14 bit ST / 18 bit MT

EAM580-B - CANopen® - *MAGRES*

Dimensions

EAM580, cable with stator coupling

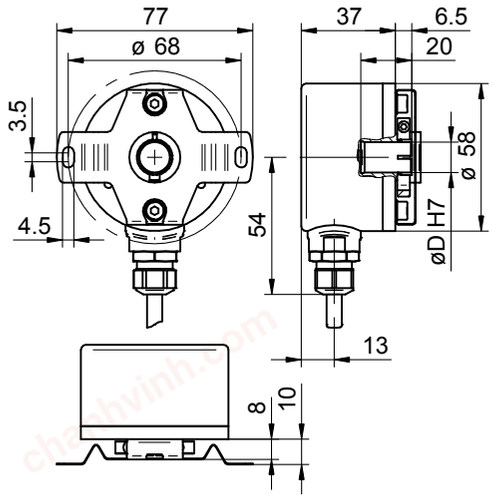

EAM580, M12 with stator coupling

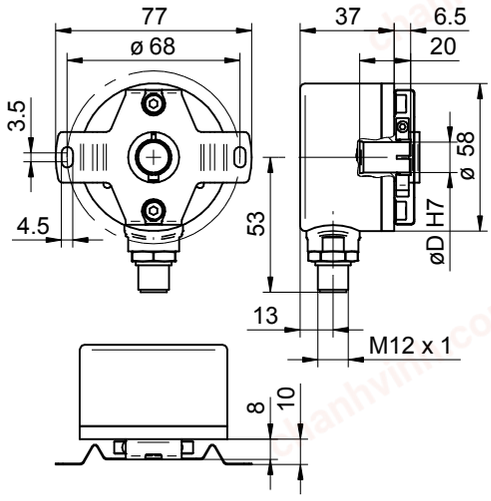

EAM580, cable w/o stator coupling

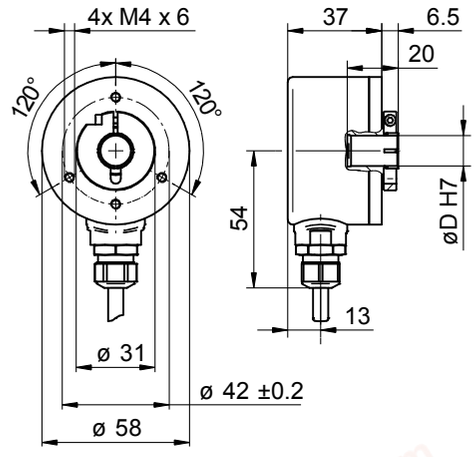

EAM580, M12 w/o stator coupling

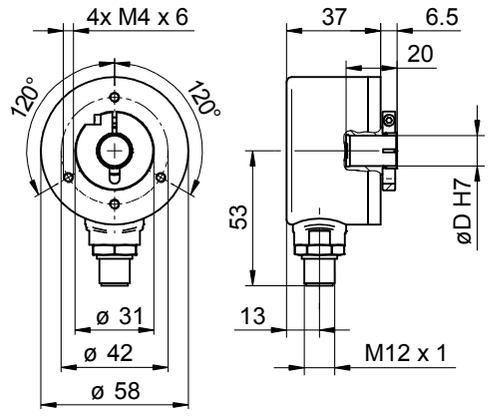

Subject to modification in technic and design. Errors and omissions excepted.

chanhvinh.com

Absolute encoders - bus interfaces

Blind hollow shaft

Magnetic single- or multiturn encoders 14 bit ST / 18 bit MT

EAM580-B - CANopen® - *MAGRES*

Dimensions

EAM580, torque pin

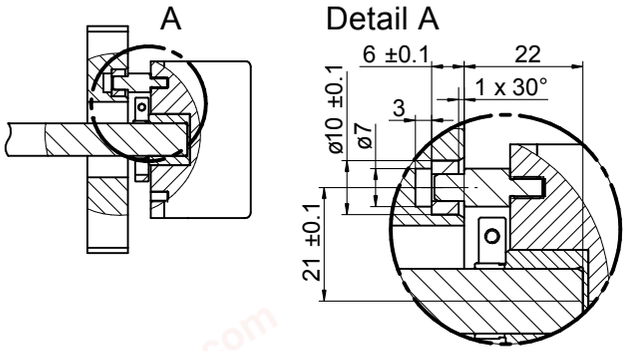

Subject to modification in technic and design. Errors and omissions excepted.