chanhvinh.com

Capacitive proximity sensors

CFDK 25G1125/LN3

dimension drawing

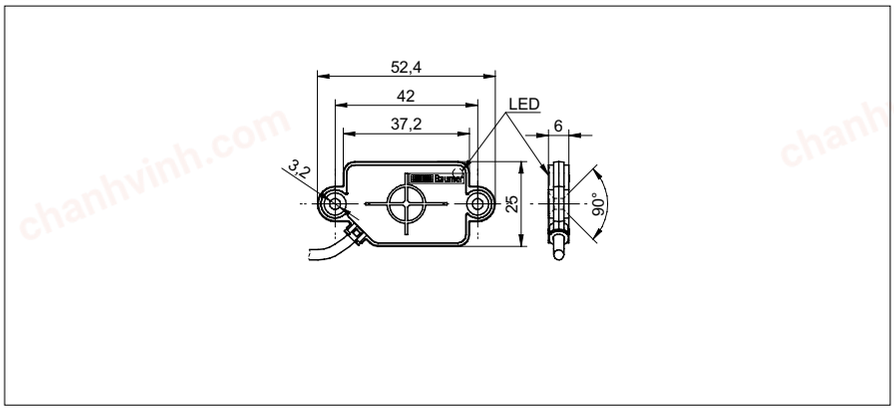

photo



general data

nominal sensing distance Sn	4 mm
mounting type	shielded
GND electrode	no
temperature drift	± 15 %
sensitivity adjustment	no
output indicator	LED red

electrical data

voltage supply range +Vs	10 ... 30 VDC
current consumption max. (no load)	15 mA
output function	active high
output circuit	push-pull
output current	< 100 mA
voltage drop Vd	< 3 VDC
switching frequency	< 35 Hz
short circuit protection	yes
reverse polarity protection	yes

connection diagram

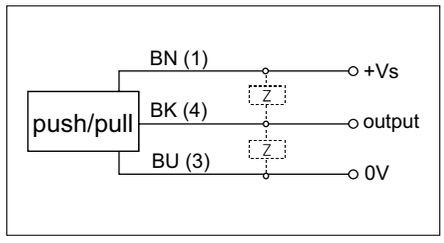

mechanical data

type	rectangular
housing material	PA 12
dimension	25 mm
housing length	52,4 mm
depth	6 mm
connection types	cable PVC 3 x 0,14, 2 m

ambient conditions

operating temperature	-25 ... +75 °C
protection class	IP 65

field of application

detection of non-conductive media	no
fill level detection through container	yes
liquids in direct contact	no
object detection / bulk goods	no