chanhvinh.com

Output circuits

Incrementale encoder

Complementary linedriver

05A

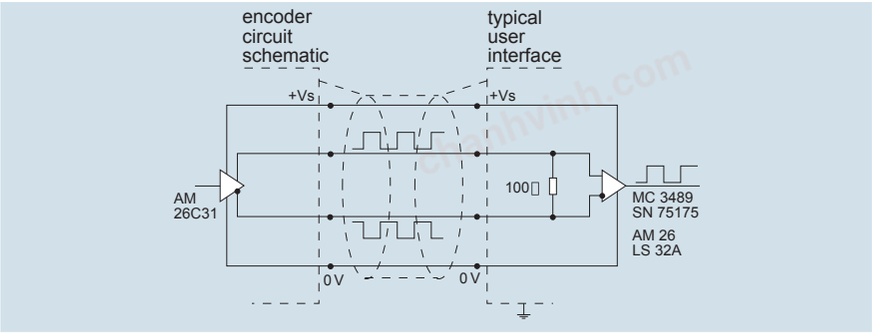

voltage supply	5 VDC ±10 %
level of signal	U_{High} ≥ 2.4 V at $-I_{High}$ = 20 mA U_{Low} ≤ 0.4 V at I_{Low} = 20 mA
supply current	see product page
special features	EIA-standard RS 422
preferred application	when EMI is present and with long cable lengths

Sine

05S

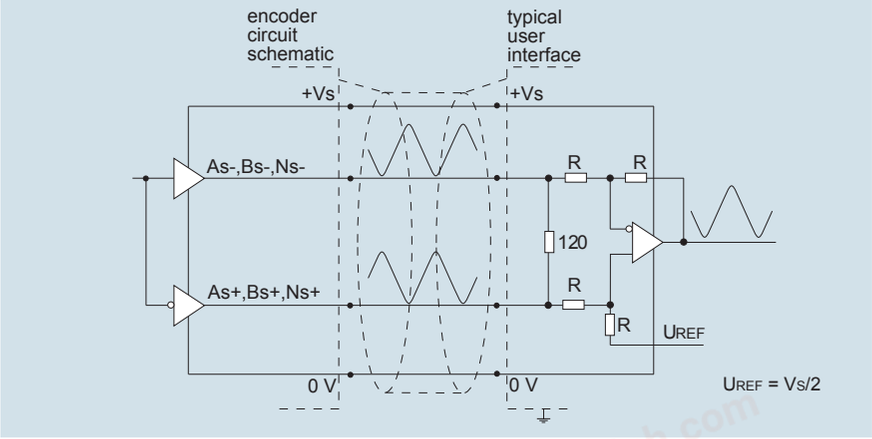

voltage supply	5 VDC ±5 %
supply current	see product page
level of output signal	approx. 1 Vpp
preferred application	for external interpolation

Push-pull short-circuit protection (TTL-compatible)

05T

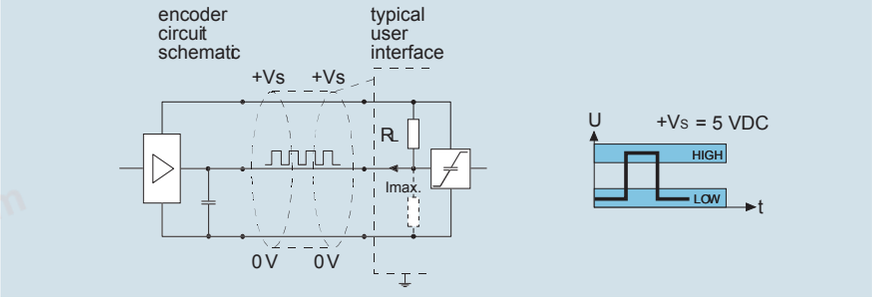

voltage supply	5 VDC ±5 %
level of signal	U_{High} ≥ 3.2 V at $-I_{High}$ = 1 mA U_{Low} ≤ 0.2 V at I_{Low} = 5 mA
supply current	see product page
preferred application	with short cable lengths

20.09.2011 Subject to modification in technic and design.

chanhvinh.com

Output circuits

Incrementale encoder

Push-pull complementary short-circuit protection

25W

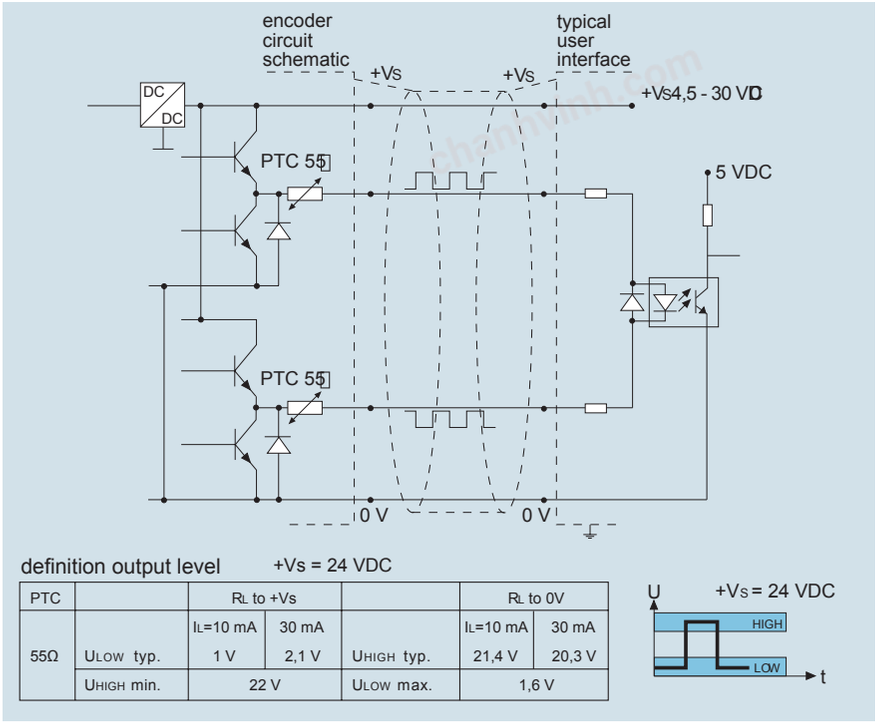

PTC		RL to +Vs			RL to 0V	
		IL=10 mA	30 mA		IL=10 mA	30 mA
55Ω	ULOW typ.	1 V	2,1 V	UHIGH typ.	21,4 V	20,3 V
	UHIGH min.	22 V		ULOW max.	1,6 V	

voltage supply	4.5 - 30 VDC
level of signal	depents on voltage supply
supply current	see product page
output current	max. 40 mA
preferred application	when EMI is present and with long cable length

Push-pull short-circuit protection

24K

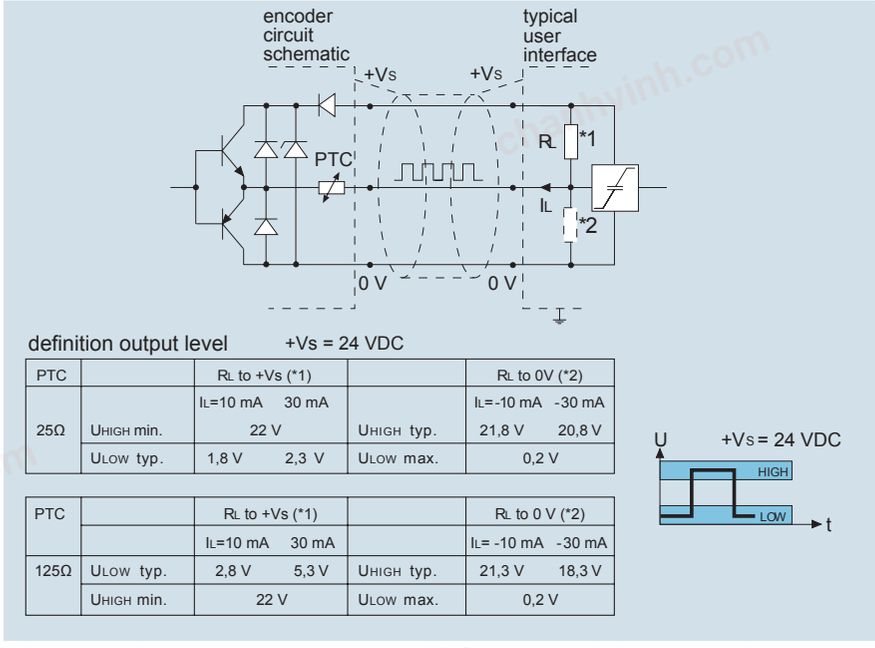

PTC		RL to +Vs (*1)			RL to 0V (*2)	
		IL=10 mA	30 mA		IL=-10 mA	-30 mA
25Ω	UHIGH min.	22 V		UHIGH typ.	21,8 V	20,8 V
	ULOW typ.	1,8 V	2,3 V	ULOW max.	0,2 V	

PTC		RL to +Vs (*1)			RL to 0 V (*2)	
		IL=10 mA	30 mA		IL= -10 mA	-30 mA
125Ω	ULOW typ.	2,8 V	5,3 V	UHIGH typ.	21,3 V	18,3 V
	UHIGH min.	22 V		ULOW max.	0,2 V	

voltage supply	10 - 30 VDC reverse polarity protected
level of signal	depents on voltage supply
supply current	see product page
output current	max. 30 mA
preferred application	for cable length up to 20 m
PTC-resistance	25 Ω (exception: BDK, BHK 125 Ω)

20.09.2011 Subject to modification in technic and design.