chanhvinh.com

FlexTop 2202 Temperature Transmitter

4...20 mA transmitter for Pt100 sensors

2-, 3- or 4-wire sensors

Accuracy better than 0.25°C

Sensor offset correction

Automatic/configurable cable resistance compensation (2-wire)

Sensor error detection

2-way configuration

Configurable damping and status indication

Engineering unit °C or °F

PC datalogging

Excellent temperature stability

Ex ia IIC T5/T6, ATEX II 1G



Description

FlexTop 2202 is a 4...20 mA loop-powered transmitter for Pt100 sensors.

Either 2-, 3- or 4-wire sensors can be used. For 2-wire sensors an automatic balancing of the sensor cable resistance is possible with shorted sensor cable. The cable resistance can be manually configured as well.

Using a PC, the Windows-based Flex-Program and a FlexProgrammer configuring unit, the following parameters can be configured via the output connectors (2-way communication): TAG no., number of wires, cable resistance, error detection level, measuring range/unit, damping, offset and status indication.

The Flex-Program has a datalogging facility enabling the user to monitor measuring results or calibrate the measuring setup.

FlexTop 2202 is embedded in silicone which makes it resistant to humid environments.

FlexTop 2202, fitting into the DIN B housing, has a 6 mm center hole for quick sensor replacement. The spring loaded mounting screws ensure a safe fastening even in vibrating environments.

Baumer

chanhvinh.com

Technical Data

Input

Accuracy	
Span ≤ 250°C:	< 0.25°C {2}
Span > 250°C:	0.1% of span
Sample time	< 0.7 sec.
Pt100 Standard	IEC/DIN/EN 60 751-2
RTD measuring current	0.3 mA, continuously
Sensor type	2-, 3- or 4-wires {1}
Sensor short detection	< -225°C
Sensor break detection	> 875°C
Error detection delay	< 10 sec.
Compensation for cable error	< 0.02°C/Ohm (3-wire)
Cable resistance	Max. 20 Ohm /wire {1}
Measuring range	-200...850°C {1}
Measuring unit	°C or °F {1}
Minimum span	25°C
Protection	+/- 35 V_{dc}
Suppression	50 and 60 Hz
Resolution	14 bit
Repeatability	< 0.1°C
Ripple immunity	IEC 770 6.2.4.2
Offset Adjustment	Max. ± 10°C {1}

Output

Signal span	4...20 mA, 2-wire
Accuracy	< 0.1% of signal span
Supply range	8...35 V_{dc}
Ripple immunity	3 V_{rms}
Load equation	$R_L \leq (V_{cc} - 8)/23$ [kOhm]
Up/Down scaling limits	23 mA/3.5 mA {1}
Damping	0...30 sec. {1}
Protection	Reversed polarity protection
Resolution	12 bit
Effect of variations in supply voltage:	
Output current	0.01% per volt
TAG No.	15 characters {1}

Environmental conditions

Operating temperature	-40...85°C
Storage temperature	-55...90°C
Humidity	< 98% RH, cond. (IEC 68-2-38)
Vibrations	GL, test 2 (IEC 68-2-6)
Long-term test	IEC 770 6.3.2

EMC data

Generic standards	EN 61000-6-3, EN 61000-6-2
Product standards	EN 61326
NAMUR	NAMUR NE21

Approval — Ex ia IIC T5/T6, ATEX II 1G

Supply range	8...28 V_{dc}
Internal inductivity	$L_i \leq 10$ µH
Internal capacity	$C_i \leq 10$ nF
Barrier data	$U \leq 28 V_{dc}$; $I \leq 0.1$ A ; $P \leq 0.7$ W
Temperature class	T1...T5: $-40 < T_{amb} < 85°C$ T6: $-40 < T_{amb} < 50°C$

Mechanical data

Dimensions	ø44 x 19 mm
Protection class	Housing: IP 40

Other data

Temperature drift	Typ. 0.003% per °C Max. 0.01% per °C
Power-on time	10 sec.

Test conditions

Configuration	0...100°C
Amb. temperature	23°C +/- 2°C
Power supply	24 VDC

Disposal of product and packing

According to national laws or by returning to Baumer

Notes

{1}	Configurable
{2}	Lower range limit ≤ 100°C

Measuring Ranges

Type	Standard	Range	Min. span	Accuracy
Pt100	DIN/EN/IEC 60751	-200...850°C {2}	25°C	0.25°C
Lin. resistance		0...500 Ohm	5 Ohm	1 Ohm

Ordering details - FlexTop 2202

	2202 000x (x)
Type	**8´ Digit**
Not configured, standard safety	1
Not configured, Ex ia IIC T5/T6, ATEX II 1G	2
Not configured, Ex nA II T5, ATEX II 3G	3
Configuration	**9´ Digit**
Configuration according to customer specifications (default is 0...120°C, 3-wire)	C

chanhvinh.com

Non-Ex Application

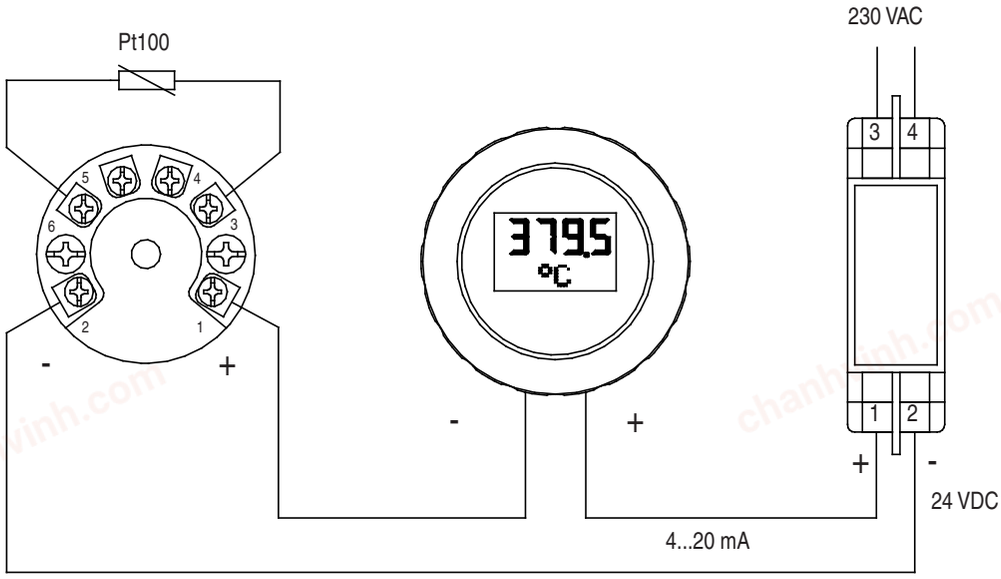

Ex Application

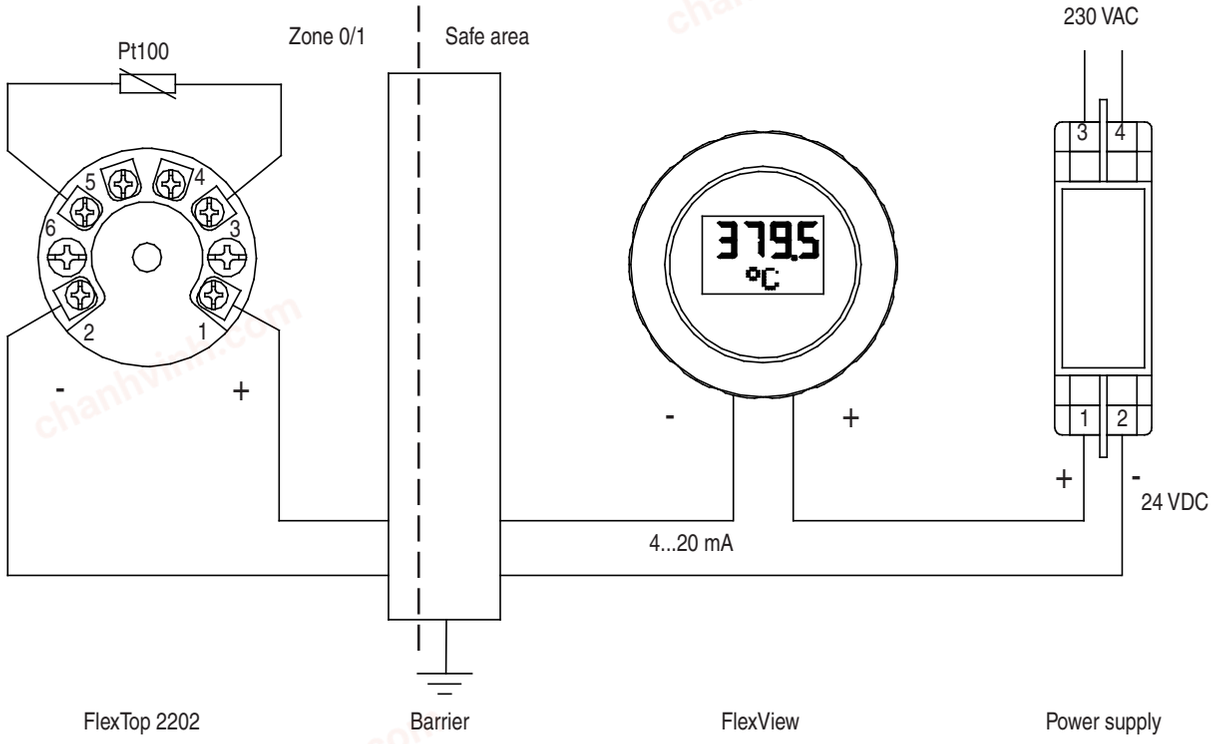

Configuration

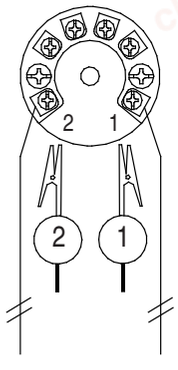

Note:
Disconnect loop supply before connecting the FlexProgrammer to FlexTop 2202.

chanhvinh.com

Electrical Installation

RTD

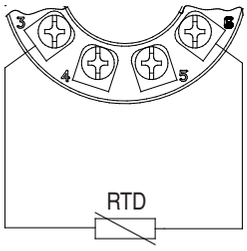

No cable compensation {3}

Potentiometer

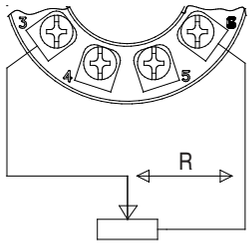

No compensation {3}

Resistance

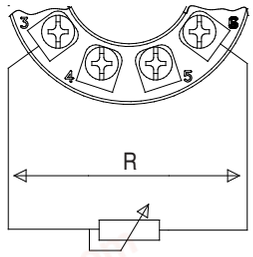

No compensation {3}

RTD

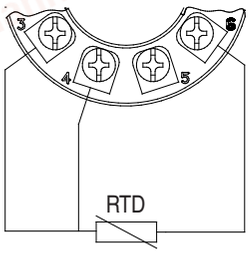

3-wire cable compensation

Potentiometer

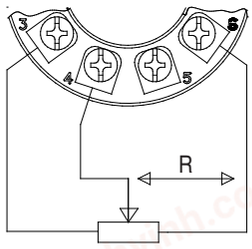

3-wire compensation for transfer resistance {4}

Resistance

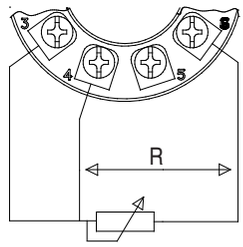

3-wire cable compensation

RTD

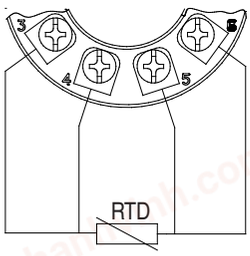

4-wire cable compensation

Potentiometer

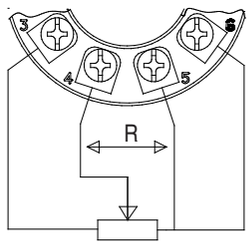

4-wire compensation for transfer resistance {4}

Resistance

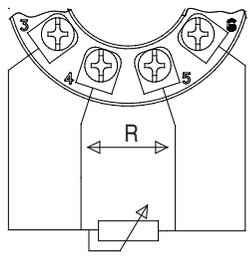

4-wire cable compensation

Notes

{3} Configurable compensation for cable resistance
{4} Transfer resistance between element and wiper

Accessories



The FlexProgrammer 9701 is a dedicated tool to configure all Baumer configurable products.

Type No. 9701-0001 comprises:
FlexProgrammer interface unit
CD with the FlexProgram software and product drivers (DTM)
USB cable
Cable with 2 alligator clips

Dimensional drawing

[mm]

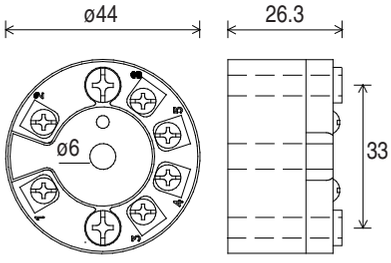

ø4 mounting hole.
Spring loaded mounting screws.

UK/2013-02-10 This data sheet may only be reproduced in full.