chanhvinh.com

Mounting bracket

Mat.-No.: 10134964

- Accessories to FxDK 14

dimension drawing

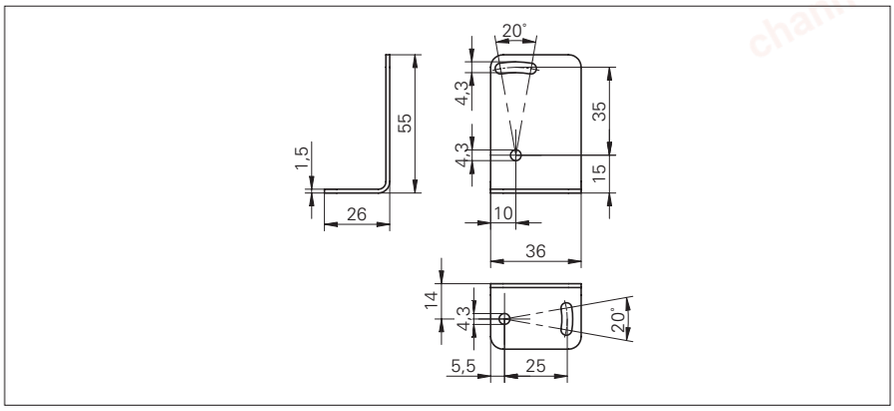

technical data

material adapter	1.4301
temperature range	-25 ... +65 °C
mounting	according to drawing

connection diagram

