chanhvinh.com

BANNER®
the photoelectric specialist

SMBQS18A Mounting Bracket

For use with QS18, QS18E, and QS18AF sensors



Features

- Die-cast bracket for mounting into 18 mm holes, or in combination with a swivel bracket (such as SMB3018SC, SMB18S, or SMB18C)
- Wrap-around bracket protects sensor against damage
- Accommodates Euro-style QD connectors and cabled versions
- Cabled units tilt ±8° (if side-mounted)
- Metal hex nut, lock washer, and grommet included
- QS18AF mounts from rear (M2.5) or side (M3) using hardware included with sensor
- Provides a low-cost alternative to an all-metal sensor

Insert nut into holes in sensor housing before inserting sensor into bracket

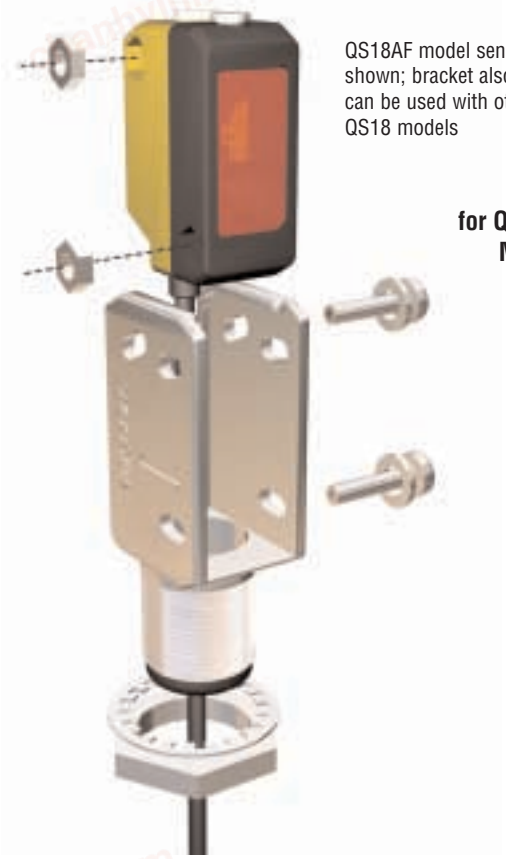

QS18AF model sensor shown; bracket also can be used with other QS18 models

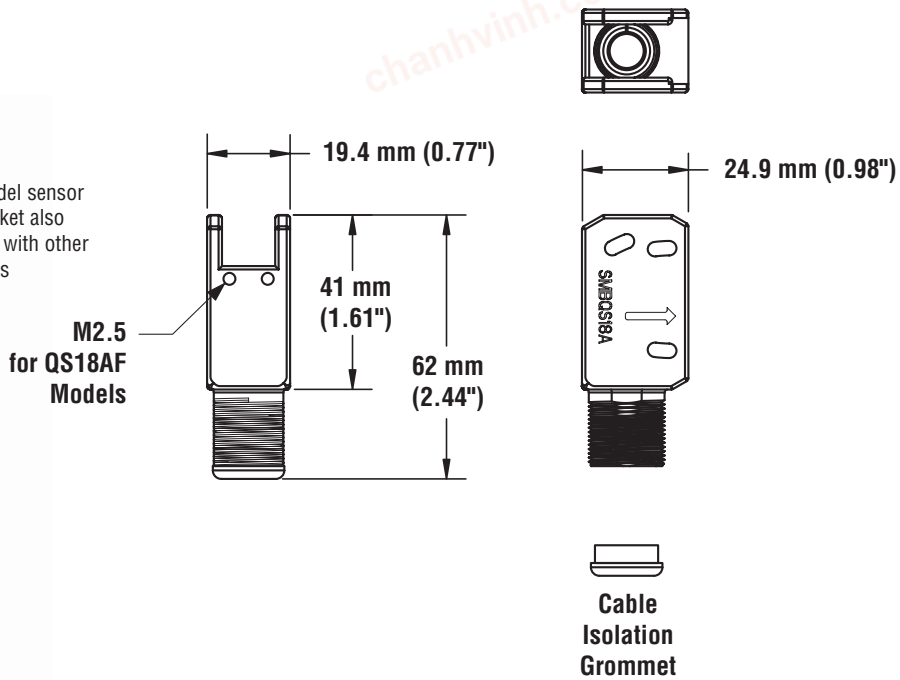

Banner Engineering Corp., 9714 Tenth Ave. No., Minneapolis, MN 55441 • Phone: 763.544.3164 • www.bannerengineering.com • Email: sensors@bannerengineering.com

Printed in USA 05/02 P/N 109128