chanhvinh.com

Safety Controllers



Safety Controller Highlights

- Intuitive icon-based drag-and-drop configuration via free PC software
- 10 input, 26 input, and expandable models available
- Communicates over industrial Ethernet
  - 80 virtual non-safe inputs
  - 256 virtual non-safe status outputs
- EtherCAT expansion module is daisy chain and line topology ready with two RJ45 connectors
- Export tag feature for easy PLC setup and integration
- Live view and configure controller via network access feature

BANNER®
more sensors, more solutions

chanhvinh.com

Safety Relays and Controllers

Industrial safety controllers and relays provide an interface between safety devices and the machines and processes those devices monitor for a complete and easy-to-use safety control solution.

Expandable Safety Controller

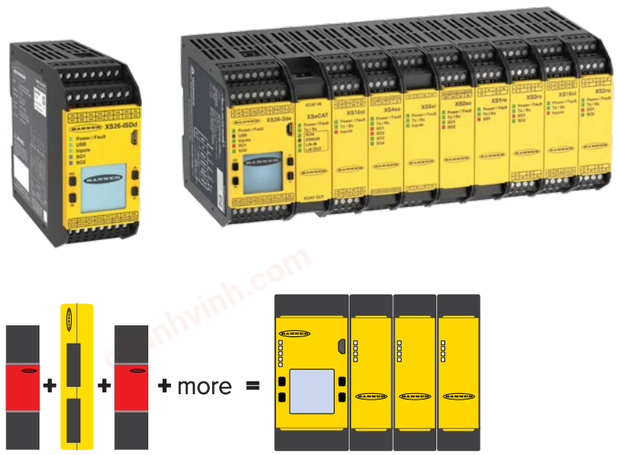

Expandable for Complex Safety applications where 3 or more safety relays are typically used

- PC Configurable: Flexible and easy-to-use
- Network Accessible: Configure and Live View via an Ethernet connection (Ethernet enabled XS26 and SC26 models only)
- Safe Devices: Up to 394 with ISD
- Safety Inputs: 26 (base unit) up to 154
- Independently controlled Safety Outputs: up to 68, 0.5A to 6A each
- Convertible Safety Inputs: 8 (Base Unit) up to 40
- LCD Display for easy troubleshooting
- Industrial Ethernet
- In-Series Diagnostic (ISD) provides detailed status and performance data

ISD, Modbus, PROFINET, EtherNet/IP, EtherCAT

Hybrid Safety Controller plus 2 Safety Relays

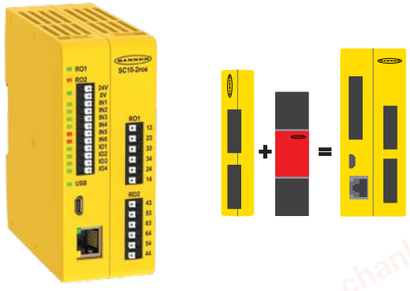

Flexible and cost effective solution for machines typically using 2 Safety Relays

- PC Configurable: Flexible and easy-to-use
- Safe Devices: Up to 70 with ISD
- Safety Inputs: up to 14 using Automatic Terminal Optimization (ATO)
- Independently controlled Safety Outputs: 2, 6A each
- Convertible Safety Inputs: 4
- Terminal LEDs for easy troubleshooting
- Industrial Ethernet

ISD, Modbus, PROFINET, EtherNet/IP

Safety Relays



Cost effective for simple safety circuits

- Pre-set Functionality: Configuration not required
- Safety Inputs: 1
- Independently controlled Safety Outputs: 1, 4 to 7A

	Configurable Safety Controllers			Pre-configured Safety Relay Modules							
	 XS26	 SC26	 SC10	 SR	 IM	 ES	 UM	 GM	 SM	 AT Two-Hand	 MMD
# of Input Terminals	up to 154*	up to 26	10*	1	1	1	1	1	1	2 STB	2
# of Safe Devices when using ISD	394	1	70	1	1	1	1	1	1	2	1
Independently Controlled Safe Outputs	up to 68*	2	2	1	1	1	1	1	1	1	1
Max. Safety Output Rating	0.5A, 6A* ea.	0.5A ea.	6A ea.	6A	6A	7A	7A	6A	6A	6A	6A
In-Series Diagnostics (ISD)	✓		✓								
Modbus TCP/IP	✓	✓	✓								
PROFINET	✓	✓	✓								
EtherNet/IP	✓	✓	✓								
EtherCAT	✓										
Network Access and View	✓	✓									
E-Stop	✓	✓	✓			✓	✓				✓
Rope Pull	✓	✓	✓			✓	✓				✓
Light Curtain/Scanner	✓	✓	✓				✓				✓
Light Curtain/Scanner with EDM	✓	✓	✓	✓	✓		✓				✓
Gate Switch (Complimentary Outputs ie. NC/NO)	✓	✓	✓					✓			
Gate Switch (Similar Outputs ie. NC/NC)	✓	✓	✓			✓	✓				✓
Safety Mat Monitoring	✓	✓	✓						✓		
Two-Hand Control	✓	✓	✓							✓	
Muting	✓	✓	✓								✓
ON/OFF Delay	✓	✓	✓								

NOTE: Up to Cat. 4 PL e. per EN ISO 13849-1; SIL 3 per IEC 61508 and IEC 62061. See www.bannerengineering.com for additional information.

*Expandable input and output modules available

chanhvinh.com

Build System and Select Equipment

Start using the free software today. Go to bannerengineering.com/safetycontrol

The feature-rich SC10 and SC/XS26 safety controller software provides a seamless user interface for setting up and managing safety systems. The software features an intuitive icon-based, drag-and-drop user interface to reduce the learning curve and speed up commissioning.

- Complex configurations made easy
- Simulate configurations before implementation
- Auto configure industrial Ethernet for remote monitoring and diagnostics

1. Choose controller



2. Equipment view

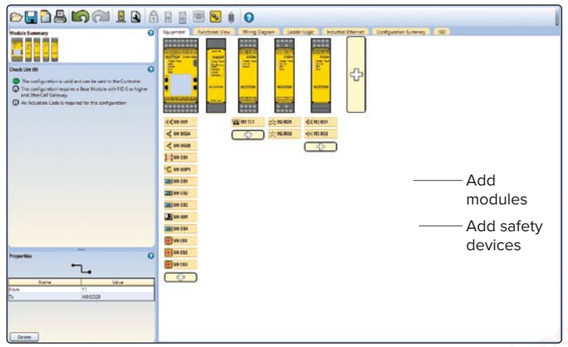

3. Add safety devices

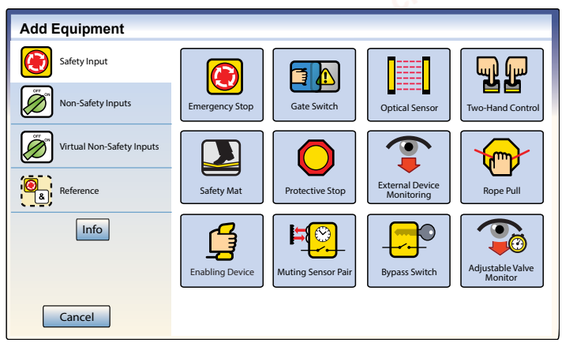

4. Select safety device properties

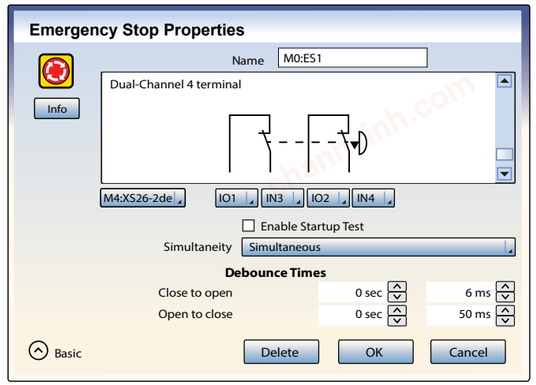

5. Add virtual non-safety inputs

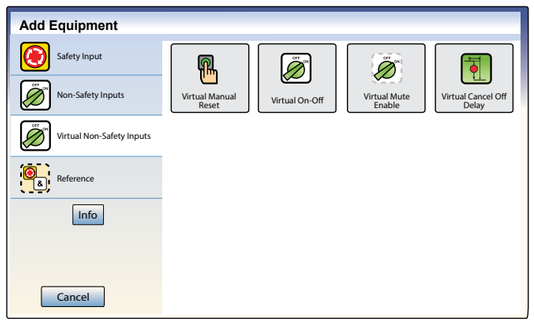

6. Configure your system in minutes

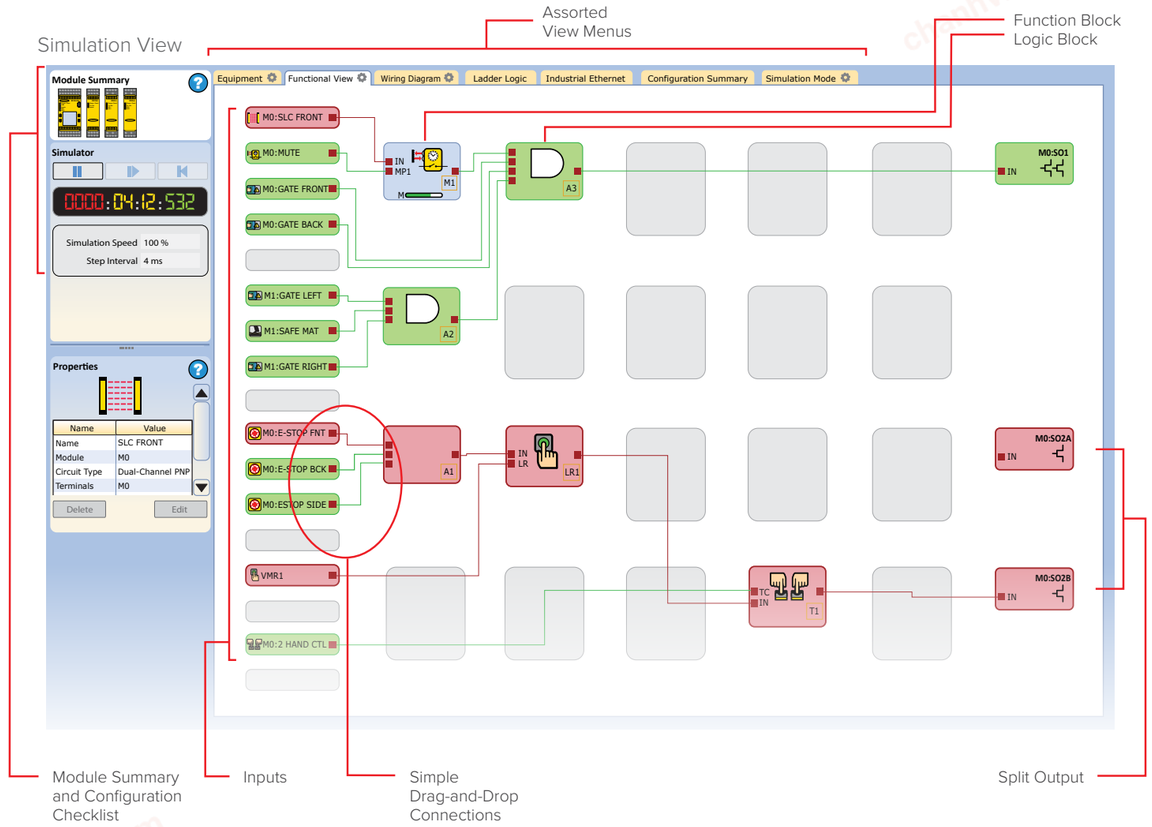

Wiring diagram in live mode

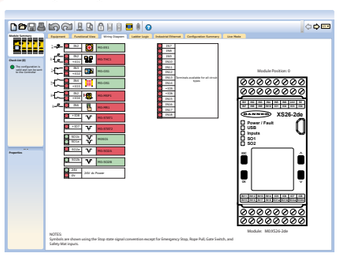

Ladder logic

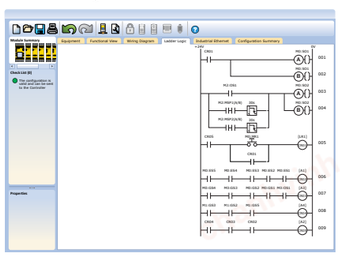

Industrial network integration

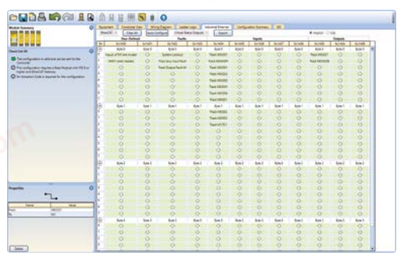

chanhvinh.com

XS26 Expandable Safety Controller

- Optional display screen allows local diagnostics for efficient troubleshooting
- Up to eight expansion I/O modules can be added as automation requirements grow or change
- Choose from six expansion module models with a variety of safety inputs, solid-state safety outputs and safety relay outputs
- Controller and input modules allow safety inputs to be converted to status outputs for efficient terminal use
- Fast programming and swapout using the SC-XM3 memory card (see next page)
- Network accessible: configure and live view via an Ethernet connection (Ethernet enabled XS26 and SC26 models only)

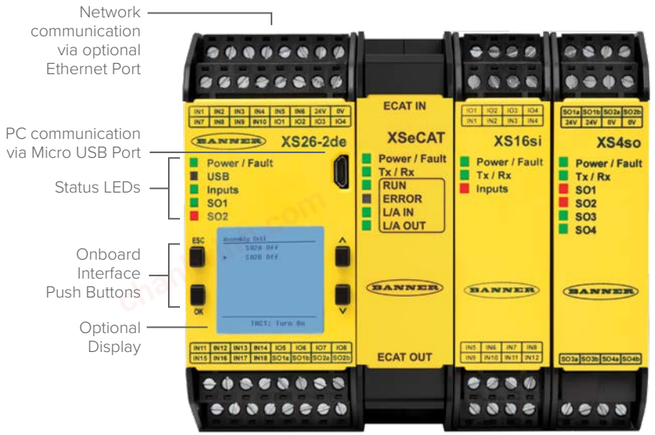

Base Controller (shown with LCD and Ethernet)



XS26 Safety Controller

- Base Controller allows eight of the 26 inputs to be configured as outputs for efficient terminal use
- Two independent pairs of safe outputs at 0.5A each
- In-Series Diagnostic (ISD) provides detailed status and performance data



SC26 Safety Controller

- Base Controller allows eight of the 26 inputs to be configured as outputs for efficient terminal use
- Two independent pairs of safe outputs at 0.5A each
- Models available with optional Ethernet and display

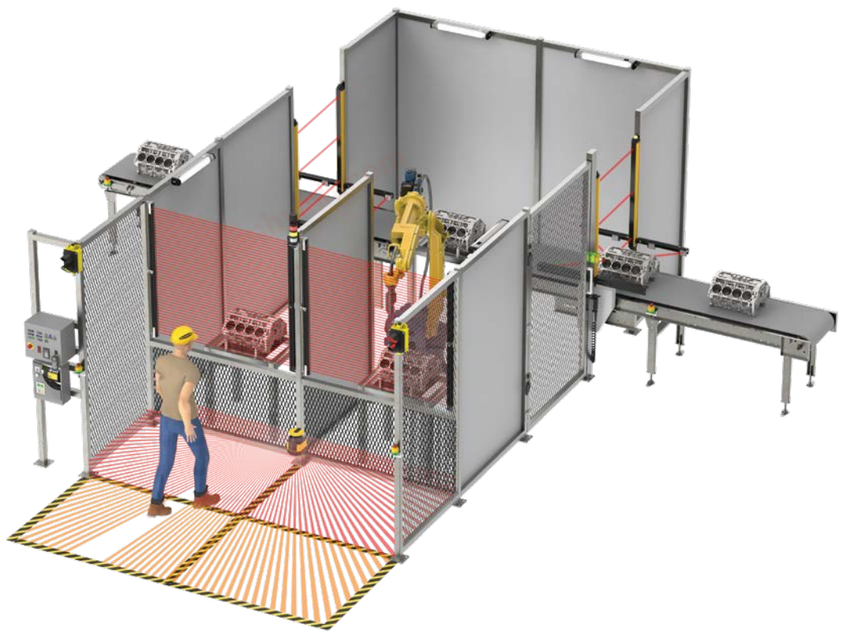

SC10 Safety Controller

Automatic Terminal Optimization (ATO)

Allows for an increase from 10 to 14 inputs

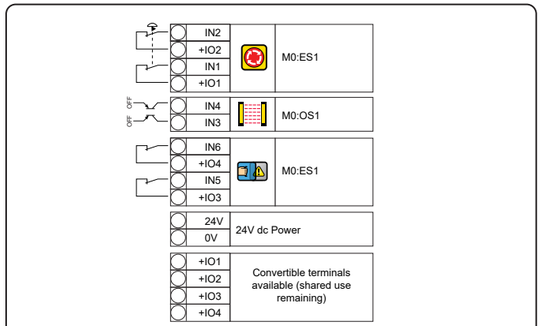

Wire Diagram View for 10 Inputs without ATO

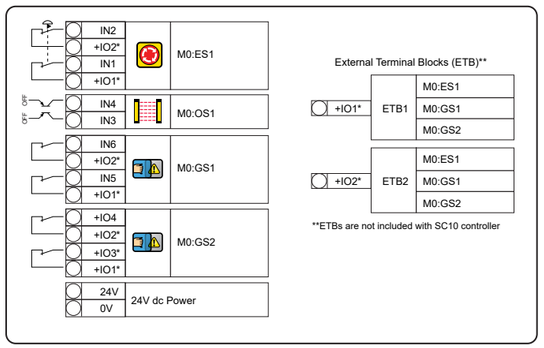

Wire Diagram View for 14 Inputs with ATO

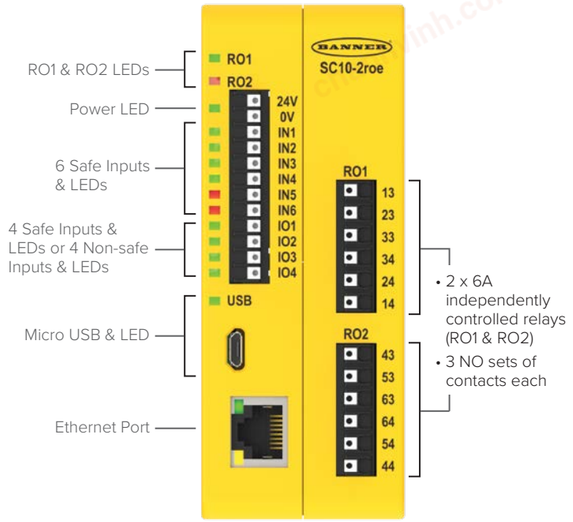



SC-XM3

Fast Programming and Swapout

- Backup copy of configuration, password, network settings
- Download configuration without a PC; Save time during panel build
- Fast swapout to minimize downtime at swapout

In-Series Diagnostics (ISD) makes it easy to access diagnostic data from devices in a safety system without special equipment or designated cabling. Users can troubleshoot machine safety systems, prevent system faults, and reduce equipment downtime. This innovative, next generation technology is exclusive to safety devices from Banner Engineering. For more information go to www.bannerengineering.com/isd



chanhvinh.com

Model*	Description	Industrial Ethernet	Inputs/ Convertible	Independently Controlled Safe Outputs	Max. Safety Output Rating
XS26-2d XS26-2de	Base Controller with LCD	✓	26/8	2	0.5A PNP @24 V DC
XS26-2 XS26-2e	Base Controller	✓	26/8	2	0.5A PNP @24 V DC
XS26-ISDd	Base Controller ISD	✓	26/8	2	0.5A PNP @24 V DC
XSeCAT	EtherCAT Expansion Module	EtherCAT	–	–	–
XS8si	Safety Input Module		8/2	–	–
XS16si	Safety Input Module		16/4	–	–
XS2so	Safety Output Module		–	1	0.75A PNP @24 V DC
XS4so	Safety Output Module		–	2	0.5A PNP @24 V DC
XS1ro	Safety Relay Output Module		–	1	6A; 2 NO, 1 NC aux
XS2ro	Safety Relay Output Module		–	2	6A; 2 NO, 1 NC aux
SC26-2d SC26-2de	Base Controller with LCD	✓	26/8	2	0.5A PNP @24 V DC
SC26-2 SC26-2e	Base Controller	✓	26/8	2	0.5A PNP @24 V DC
SC10-2roe	Base Controller ISD	✓	10/4	2	6A; 3 NO

*Models operate at 24 V DC +/- 20%.

Specifications



Accessories



SC-USB2
USB Cable



SC-XM3
Memory Card



SC-XMP2
SC-XM2/3 Configuration Tool

Additional accessories are available at bannerengineering.com

Start using the free software today. Go to bannerengineering.com/safetycontroller

Banner Engineering Corp.
9714 10th Avenue North • Minneapolis, MN 55441 • 1-888-373-6767 • www.bannerengineering.com

© 2023 Banner Engineering Corp. Minneapolis, MN USA

PN 174393 rev. H