chanhvinh.com

A-GAGE® High-Resolution MINI-ARRAY®

Instruction Manual

Original Instructions
64118 Rev. D
30 August 2019
© Banner Engineering Corp. All rights reserved

BANNER®
more sensors, more solutions

64118

chanhvinh.com

Contents

1 Product Description 3
1.1 Emitter and Receiver Models 3
1.2 Control Module Models 4
2 System Overview 5
2.1 System Features 5
2.2 Supplied System Software 6
2.3 Typical Applications 6
3 Installation Instructions 8
3.1 Emitter and Receiver Mounting 8
3.2 Control Module Mounting 9
3.3 Wiring 9
3.3.1 Emitter and Receiver Wiring 10
3.3.2 Inputs 10
3.3.3 Outputs 11
3.4 Install the Software 11
4 Control Module Configuration 13
4.1 Communications Setup 13
4.1.1 Ping Routine 13
4.1.2 Factory Settings 14
4.2 System Alignment 14
4.2.1 Push-Button Alignment Routine 14
4.2.2 Software Alignment Routine 14
4.2.3 Blanking 15
4.3 Programming Control Module Response 17
4.3.1 Selected Controller and Serial Communication 18
4.3.2 Control Mode Selection 19
4.3.3 Scanning Method 19
4.3.4 Scan Analysis Mode Selection 22
4.3.5 Analog Output Configuration (Analysis Mode Assignment) 22
4.3.6 Zero Value 23
4.3.7 Discrete Output Configuration (Analysis Mode Assignment) 23
4.4 Serial Communication with a Host Controller 24
4.4.1 Serial Data Transmission 24
4.4.2 Transmission Type 25
4.4.3 Serial Options 25
4.5 Transfer of PSF to the Control Module 25
4.5.1 Saving and Recalling PSF Files 25
4.5.2 PSF Output Analysis 25
4.5.3 Quit and Exit 26
5 System Diagnostics 27
5.1 Diagnostic Indicators 27
5.2 Diagnostics Routine 28
6 Specifications 29
6.1 Emitter and Receiver Specifications 29
6.2 Emitter and Receiver Dimensions 30
6.3 Emitter/Receiver Mounting Bracket Dimensions 31
6.4 Control Module Specifications 31
6.5 Control Module Dimensions 33
7 Accessories 34
7.1 Cordsets 34
8 Additional Information 35
8.1 Host Mode Command String 35
8.2 Serial Data Format and Header String 35
8.2.1 ASCII Format Data Transmission 35
8.2.2 Binary Format Data Transmission 36
8.3 Max Meas Mode Command String 37
8.4 Glossary 38
9 Product Support and Maintenance 39
9.1 Contact Us 39
9.2 Banner Engineering Corp Limited Warranty 39

chanhvinh.com

1 Product Description

For Controllers with 2 Analog and 2 Discrete Outputs

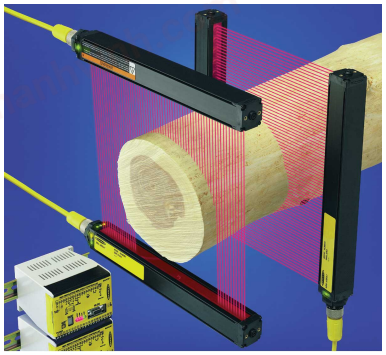

- Excels at high-speed, precise process monitoring and inspection applications
- A comprehensive combination of scanning modes and outputs:
  - 10 measurement (Scan Analysis) modes
  - 3 scanning methods
  - Beam blanking
  - Selectable continuous, gated or host-controlled scan initiation
  - Programmable hysteresis for high and low limits
  - Serial communication options
- Storable scanning programs eliminate reprogramming for repeated applications
- Non-volatile memory stores alignment settings
- All models with both Analog and Discrete outputs
- Analog output Null setting
- Low cost, compared with similar systems
- Precision sensors have a 380 mm to 1.8 m (15 in to 6 ft) working range
- Wide field of view, easily aligned
- Alignment routine equalizes gain of each beam for reliable 2.5 mm (0.10 in) object detection throughout the array
- Host computer or PLC may be used to initiate scans and/or process scan data
- Unique addresses for up to 15 control modules on one EIA-485 Party Line

WARNING:
- **Do not use this device for personnel protection**
- Using this device for personnel protection could result in serious injury or death.
- This device does not include the self-checking redundant circuitry necessary to allow its use in personnel safety applications. A device failure or malfunction can cause either an energized (on) or de-energized (off) output condition.

1.1 Emitter and Receiver Models

Emitter Model	Receiver Model	Array Length Y	Total Beams
MAHE6A Emitter	MAHR6A Receiver	163 mm (6.4 in)	64
MAHE13A Emitter	MAHR13A Receiver	325 mm (12.8 in)	128
MAHE19A Emitter	MAHR19A Receiver	488 mm (19.2 in)	192
MAHE26A Emitter	MAHR26A Receiver	650 mm (25.6 in)	256
MAHE32A Emitter	MAHR32A Receiver	813 mm (32.0 in)	320
MAHE38A Emitter	MAHR38A Receiver	975 mm (38.4 in)	384
MAHE45A Emitter	MAHR45A Receiver	1138 mm (44.8 in)	448
MAHE51A Emitter	MAHR51A Receiver	1300 mm (51.2 in)	512
MAHE58A Emitter	MAHR58A Receiver	1463 mm (57.6 in)	576
MAHE64A Emitter	MAHR64A Receiver	1626 mm (64.0 in)	640
MAHE70A Emitter	MAHR70A Receiver	1788 mm (70.4 in)	704
MAHE77A Emitter	MAHR77A Receiver	1951 mm (76.8 in)	768

chanhvinh.com

1.2 Control Module Models

Controller Model	Solid-State Discrete Outputs	Analog Outputs
MAHCVP-1	2 PNP	(2) 0 V to 10 V Sourcing
MAHCVN-1	2 NPN	(2) 0 V to 10 V Sourcing
MAHCIP-1	2 PNP	(2) 4 mA to 20 mA Sinking
MAHCIN-1	2 NPN	(2) 4 mA to 20 mA Sinking

chanhvinh.com

2 System Overview

The A-GAGE® High-Resolution MINI-ARRAY® measuring light screen is ideal for applications such as on-the-fly product sizing and profiling, edge-guiding and center-guiding, loop tensioning control, hole detection, parts counting and similar uses.

A typical A-GAGE High-Resolution MINI-ARRAY system has five components: a high-resolution emitter/receiver pair, each with quick-disconnect (QD) connectors; one of four compact control modules; and quick-disconnect cables to connect them. Software is included to interface any PC-compatible computer (running Windows®[1] XP, Vista, or 7) with the control module for system configuration. A host computer or PLC may be used to control and/or receive input from the system.

Sensors are available in twelve array lengths from 163 mm to 1951 mm (6.4 in to 76.8 in), in 163 mm (6.4 in) increments. The emitter has two columns of infrared LEDs spaced 5 mm (0.2 in) apart. The columns are separated by 7.5 mm (0.3 in) and are staggered from each other by 2.5 mm (0.1 in). The receiver is configured opposite to the emitter, with the identical length and beam spacing. This high-resolution sensor pair is capable of detecting a 12.7-mm long by 2.54-mm diameter (0.5 in by 0.1 in diameter) cylindrical rod (held perpendicular to the sensor). The sensors have a wide field of view and are easily aligned, with a working range of 380 mm to 1.8 m (15 in to 6 ft).

Each of the four versatile microcontroller-based control modules are configured using a PC-compatible computer running Windows XP, Vista, or 7, and the supplied software, via the built-in RS-232 interface.

2.1 System Features

Built-in features simplify the operation of the A-GAGE High-Resolution MINI-ARRAY system. High-resolution emitters and receivers, available in twelve lengths, feature two closely spaced columns of beams to provide a precise, high-resolution light screen for exacting applications. The Alignment routine automatically equalizes the excess gain of each beam for reliable 2.5-mm (0.10-in) object detection throughout the array and stores this data in non-volatile memory. The Alignment routine does not need to be performed again unless the sensing application changes, or if the emitter and/or receiver is moved. Programmable beam blanking accommodates machine components or other fixtures that must remain in or move through the light screen. Blanking may be set automatically as part of the initial setup, or by using the included configuration software.

Built-in diagnostic programming and easy-to-see indicators on the sensors and the control module make alignment and troubleshooting easy. The emitter has a red LED that signals proper operation. The receiver has three bright LEDs: green signals that the sensors are properly aligned; yellow signals marginal alignment; and red signals misalignment or a blocked condition. The control module has four status indicators: 3 red LEDs signal discrete output #1 conducting, Alarm output (discrete output #2) conducting, and gate signal received; a green LED signals that the sensors are properly aligned. A segmented LED Diagnostics Indicator provides detailed system status using single-digit codes; a period in the indicator window indicates the presence of blanking. A key to the diagnostics codes is printed on the side of the control module for simplified troubleshooting.

The A-GAGE High-Resolution MINI-ARRAY system provides a wide selection of sensing and output options, including: measurement (scan analysis) modes and scanning methods that can determine the target object's location, overall size, total height or total width. Scanning may be continuous or controlled by a host process controller or a gate sensor. Up to 15 systems may be networked.

[1] Microsoft and Windows are registered trademarks of Microsoft Corporation in the United States and/or other countries.

chanhvinh.com

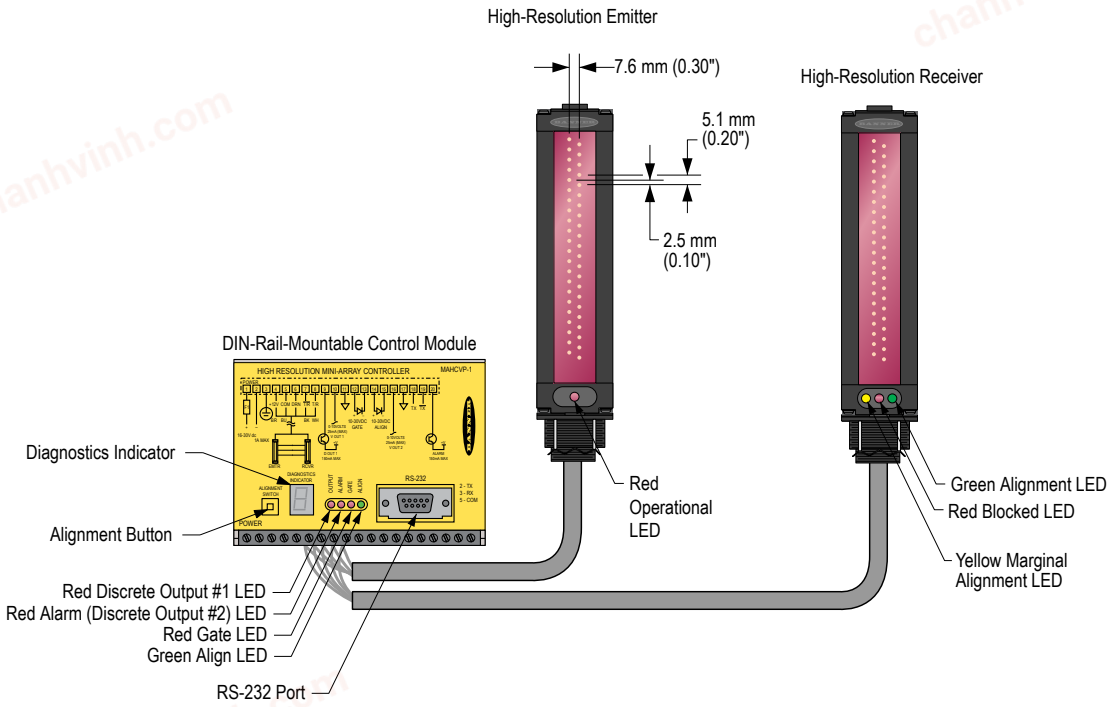

Figure 1. A-GAGE High-Resolution MINI-ARRAY System Features

2.2 Supplied System Software

The supplied software program, used to configure each system control module, may be run on any PC running Windows® XP, Vista, or 7. The menu-driven program walks the user through the many scanning and output options. After the desired options are selected, the user can save the combination of selections in a Parameter Setup File (PSF), and store it in the control module's non-volatile memory. Any number of PSFs may be stored in the computer and recalled as needed.

The software also provides alignment and diagnostics routines. An Alignment screen displays the individual status of each beam in the light screen, as well as the total number of beams in the system, and totals of beams blocked, made, and blanked. Built-in system diagnostics can be used to assess emitter and receiver hardware errors.

2.3 Typical Applications

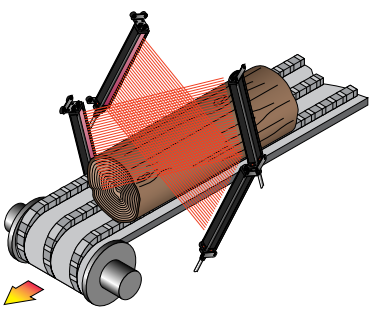

Figure 2. Log Profiling for Lumber Optimization

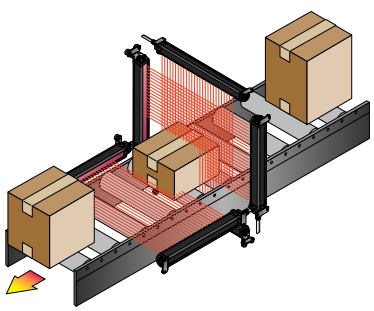

Figure 3. Box Profiling

chanhvinh.com

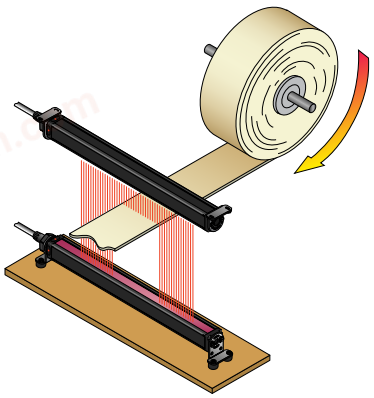

Figure 4. Maintaining Center of Opaque Rolled Goods

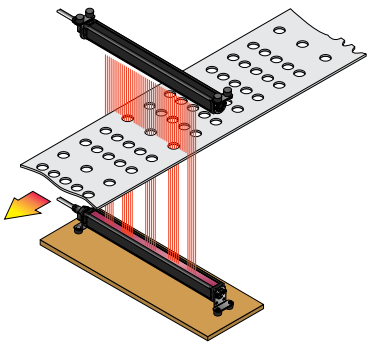

Figure 5. Inspection Applications

chanhvinh.com

3 Installation Instructions

3.1 Emitter and Receiver Mounting

Banner MINI-ARRAY emitters and receivers are small, lightweight, and easy to handle during mounting. The mounting brackets (supplied) allow ±30° rotation.

From a common point of reference, make measurements to locate the emitter and receiver in the same plane with their midpoints directly opposite each other. Mount the emitter and receiver brackets using the vibration isolators and M4 Keps nuts (all supplied). Standard M4 or #8-32 bolts may be substituted (and the vibration isolators eliminated) in situations where the emitter and receiver are not subjected to shock or vibration forces. While the internal circuits of the emitter and receiver are able to withstand heavy impulse forces, the vibration isolators dampen impulse forces and prevent possible damage due to resonant vibration of the emitter or receiver assembly.

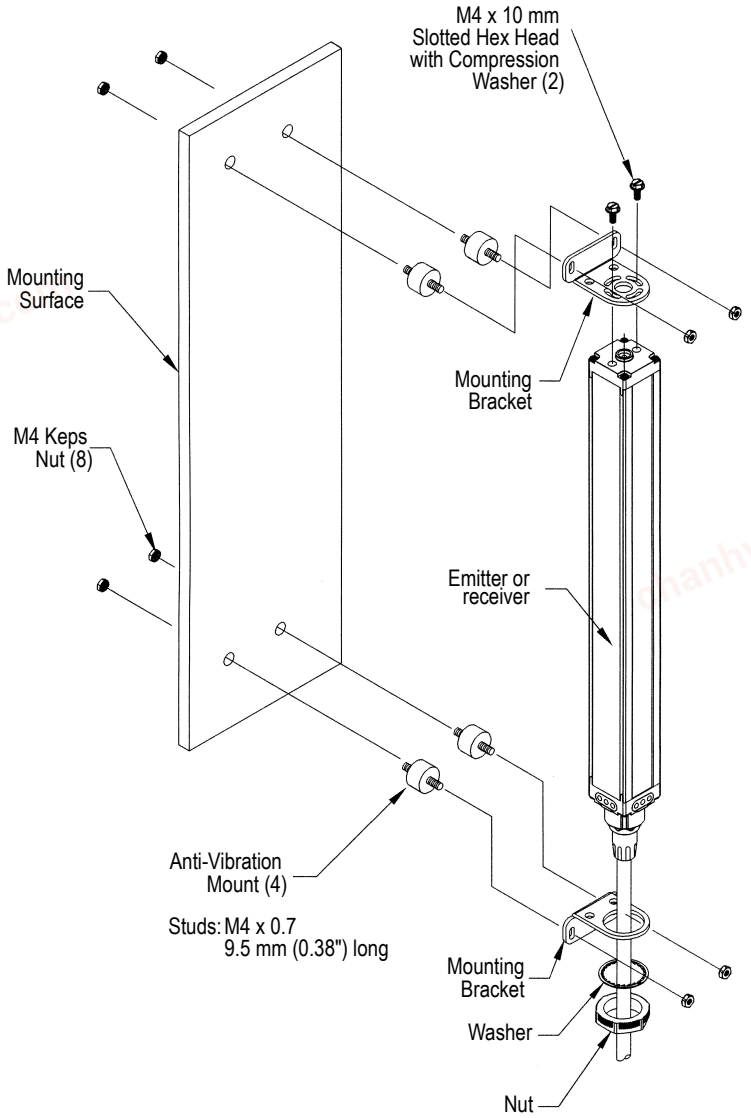

Figure 6. A-GAGE High-Resolution MINI-ARRAY emitter and receiver mounting hardware

1. Mount the emitter and receiver in their mounting brackets; see *Figure 6* (p. 8).
2. Position the red lenses of the two units directly facing each other. The connector ends of both sensors must point in the same direction.
3. Measure from one or more reference planes (for example, the floor) to the same points on the emitter and receiver to verify their mechanical alignment. If the sensors are positioned exactly vertical or exactly horizontal, a carpenter's level may be useful for checking alignment. Extending a straight-edge or a string between the sensors may help with positioning.
4. Also check by eye for line-of-sight alignment.

chanhvinh.com

5. Make any necessary final mechanical adjustments, and hand-tighten the bracket hardware.
6. See *System Diagnostics* (p. 27) for information on alignment indicators and *Control Module Configuration* (p. 13) for information on the use of the alignment software which is supplied with the controller.

3.2 Control Module Mounting

Install the controller inside an enclosure with a NEMA (or IEC) rating suitable for the operating environment. Mounting dimensions for the controller are shown in *Control Module Dimensions* (p. 33). The controller is supplied with M3.5 hardware for direct mounting to a surface, or it can be mounted onto standard 35 mm DIN rail.

3.3 Wiring

Refer to the following figures for the appropriate wiring information.

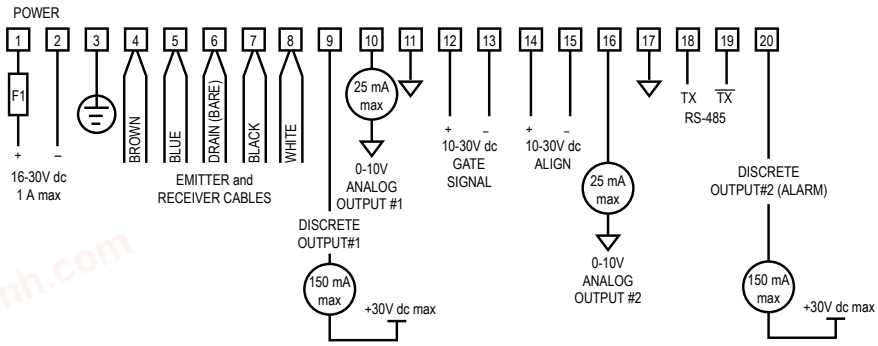

Figure 7. MAHCVN-1 Wiring

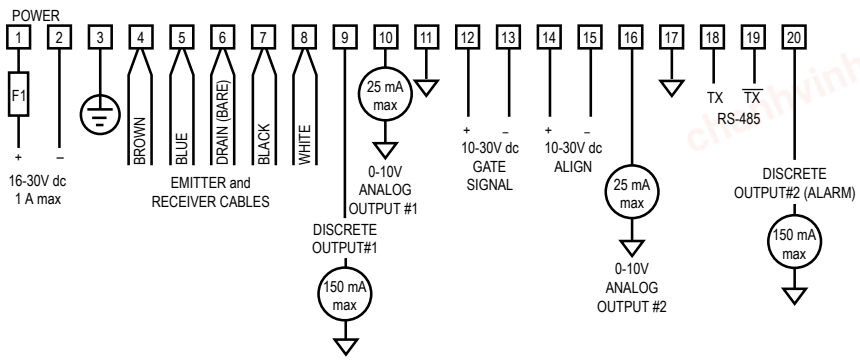

Figure 8. MAHCVP-1 Wiring

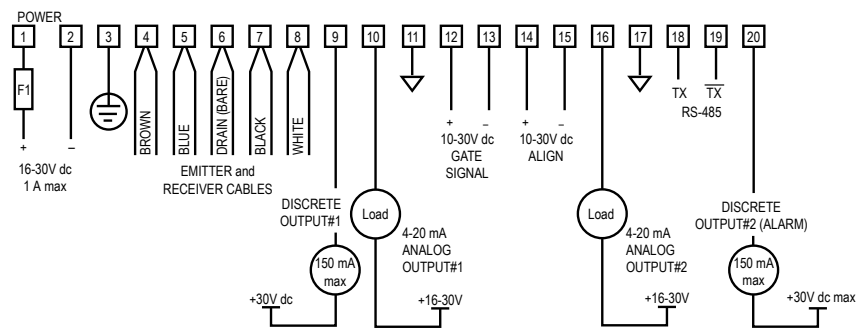

Figure 9. MAHCIN-1 Wiring

chanhvinh.com

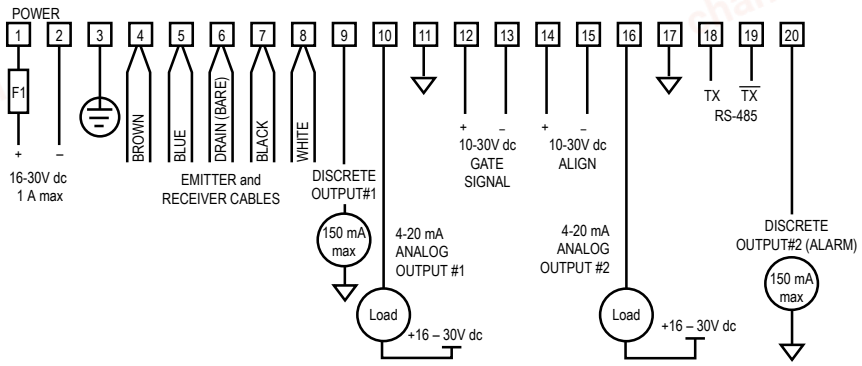

Figure 10. MAHCIP-1 Wiring

3.3.1 Emitter and Receiver Wiring

Connect emitters and receivers together in parallel to terminals #4 through #8 of the control module (identical for all control module models). See the figures in *Wiring* (p. 9) for wire color information.

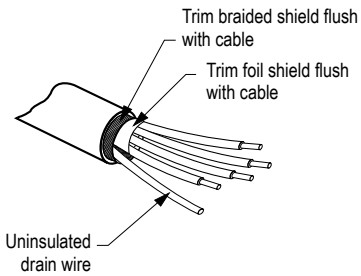

Note: The “drain wire” is the uninsulated stranded wire which runs between the braided shield and the foil shield. The foil shield and the braided shield should be removed at the point where the wires exit the cable.

Figure 11. Emitter and Receiver Cable Preparation

3.3.2 Inputs

System Power: Connect a source of 16 V dc to 30 V dc, rated at 1 amp or greater, to control module terminals #1 (+) and #2 (-). Connect a good earth ground to terminal #3 to provide electrical and RF noise immunity to the System.

Note: Remove power before making other connections to the controller.

Gate Signal: A source of 10 V dc to 30 V dc switched to terminals #12(+) and #13(-) provides a gating input (if required). The gating voltage typically is switched by the open-collector output transistor of a dc sensing device. The gate signal controls scanning when one of four Gate options is selected in the Control Mode Selection menu of the PSF configuration routine (see *Control Mode Selection* (p. 19)) .

Align: A source of 10 V dc to 30 V dc switched to terminals #14(+) and #15(-) provides a remote means of running the automatic alignment and blanking routines. The switch sequence is identical to the procedure described in *Push-Button Alignment Routine* (p. 14) for the Alignment switch on the front of the control module.

chanhvinh.com

3.3.3 Outputs

Control Module	Analog Outputs (Terminals #10 and 16)	Discrete Outputs[2] (Terminals #9 and 20)
MAHCVN-1 *Figure 7* (p. 9)	0 V to 10 V Sourcing 15 mA maximum	NPN open-collector 30 V dc maximum 150 mA maximum
MAHCVP-1 *Figure 8* (p. 9)	0 V to 10 V Sourcing 15 mA maximum	PNP open-collector 30 V dc maximum
MAHCIN-1 *Figure 9* (p. 9)	4 mA to 20 mA Sinking 16 V dc to 30 V dc	NPN open-collector 30 V dc maximum 150 mA maximum
MAHCIP-1 *Figure 10* (p. 10)	4 mA to 20 mA Sinking 16 V dc to 30 V dc	PNP open-collector 30 V dc maximum 150 mA maximum

Serial Communication

RS-232: All A-GAGE High-Resolution MINI-ARRAY Systems may communicate with a host computer or controller via RS-232 or RS-485 serial protocol. See Section 5.3.1 for selectable communications parameters. Prepare an RS-232 cable using a male DB-9 connector with connections as shown.

Note: DO NOT use a “null modem” RS-232 cable

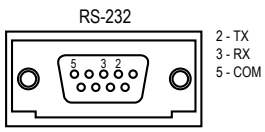

DB-9 Pin #	Function
2	Transmit (TX)
3	Receive (RX)
5	Ground (GND)

Figure 12. DB-9 connections between the control module and the PC

RS-485: RS-485 serial port is located at terminals #18 (TX) and #19 (TX).

3.4 Install the Software

The Parameter Setup Software CD includes an installation program that quickly and easily loads the MINI-ARRAY configuration program into the computer. The MINI-ARRAY configuration program requires approximately 50 MB of hard disk space. Install as follows:

1. Use the Parameter Setup Software CD included with the controller, or download from *www.bannerengineering.com* as required.

[2] Discrete Output #2 is labeled Alarm on the control module.

chanhvinh.com

2. Insert the Software CD into the CD drive.
   - If the program does not auto-start, browse to your CD drive, click **Setup.exe**, then select **START**, then select **RUN**. The Welcome dialog box displays. Select **Next**, and follow the prompts in the dialog boxes as they appear.
   - If the program does auto-start, the Welcome dialog box appears. Select **Next**, and follow the prompts in the dialog boxes as they appear.
3. The installation program decompresses the files. A status dialog box monitors the progress of the installation.
4. An **Installation Completed** dialog box appears. Select **OK**.
5. Reboot your computer for the changes to take effect.
   After the software is installed, a MINI-ARRAY shortcut icon is placed on your desktop. Double-click the **MINI-ARRAY icon** to launch the program, then follow the configuration instructions.

chanhvinh.com

4 Control Module Configuration

Configure the A-GAGE High-Resolution MINI-ARRAY control module using a Windows® menu-style routine; the configuration routine requires the Banner-supplied HRMA software and a PC-compatible computer (running Windows® XP, Vista, or 7). Make a serial data connection between the computer and the DB9 connector on the control module.

4.1 Communications Setup

1. After installing the software, attach the serial communication cable between the control module and the PC.

   Note: If an RS-232 interface is used, only one control module is allowed on the line at any one time.

   The minimum connections to the control module's DB-9 connector are shown in *Figure 12* (p. 11).
2. Launch the High-Resolution MINI-ARRAY program.
3. Configure the serial communications port of the PC.
   a) Select **Options** > **Serial Port** from the High-Resolution MINI-ARRAY main menu.
      The program supports serial communication via the COM1-COM20.port of the computer.
   b) Highlight the desired serial port to select it.
   c) Select **Save Settings** on Exit to store the serial port selection, if it is not already ON.

   Parity is selected here also: Even, Odd or None.

4.1.1 Ping Routine

Perform the Ping routine during system configuration, and before any Diagnostic, Alignment, or Edit routine. The routine polls all control modules on the communications line (one, in the case of the standard RS-232 line, or up to 15 modules, on an RS-485 circuit). It then is used to select an individual control module for configuration or alignment.

1. If needed, apply power to the system control module and allow the system to complete its power-up routine.
2. Press **F5** or access the MINI-ARRAY menu.
3. Select **Ping** to perform the Ping routine.
   All connected control modules identify themselves with an ID value and baud rate; the routine takes approximately 15 to 20 seconds. After the Ping is performed, all valid control module ID values display in a chart on the screen, under their appropriate baud rates. Control modules are identified in the chart as **X**.

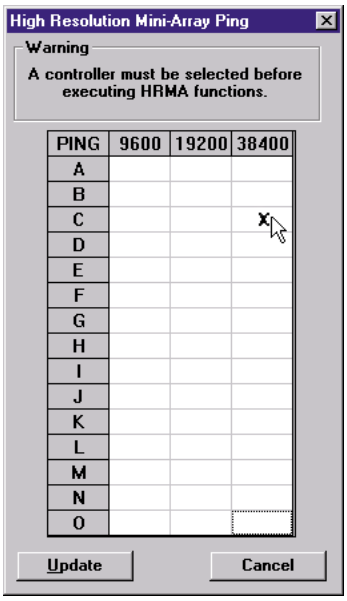

Figure 13. Screen showing the result of a completed Ping routine

4. Point to a valid ID and click to select a control module.
   System Diagnostics, Alignment, or Edit routines may now be performed for the selected control module.

chanhvinh.com

4.1.2 Factory Settings

Of the 15 available control module ID values (A through O), the factory software setting is A. Selectable communication baud rates are 9600, 19200, and 38400; the factory setting is 9600. See *Selected Controller and Serial Communication* (p. 18) for information on changing these settings.

4.2 System Alignment

The emitter/receiver pairs have a wide field of view and are easy to align. The recommended distance between the emitter and receiver ranges from 380 mm to 1829 mm (15 in to 72 in). Shorter sensor separation can be achieved; consult Banner Engineering for details.

Perform the Alignment process at System installation and repeat it every time one or both of the sensors is moved. Alignment of the System can be specified automatically using either the Alignment routine of the configuration software or the Alignment switch on the control module's front panel.

The System also may be aligned remotely, using pins 14 and 15 on the terminal block. Apply 10 V dc to 30 V dc power to the pins to approximate the push-button procedure. For example, apply input signal for 3 seconds to access Alignment mode.

1. Make sure the sensors have been wired as shown in *Wiring* (p. 9).
2. Apply power to the control module via terminals #1 and #2 (16 V dc to 30 V dc).

   The Diagnostics Indicator shows the sensors going though a power-up test: first the receiver, then the emitter. After the sensors have been tested and the System is ready for service, the Diagnostics Indicator shows **—** or **—.**; see figure.

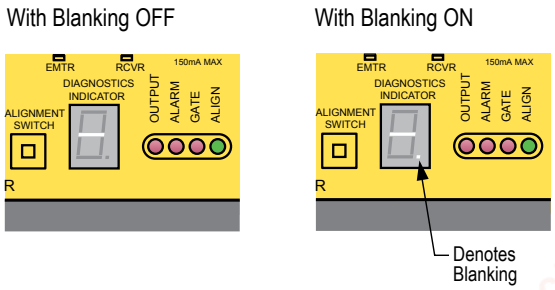

Figure 14. Diagnostics Indicator Showing a Clear Condition

4.2.1 Push-Button Alignment Routine

Re-align the System at installation or whenever the emitter and/or receiver is moved.

1. Press the Alignment switch on the control module front panel for 3 seconds.
   The letter **A** displays on the Diagnostics Indicator; the System is learning a clear condition.
2. Rotate the sensors as required (but do not change the distance between them).
   When the green Alignment LED is displayed on the control module and receiver, the sensors are adequately aligned.
3. To leave Alignment mode, press the Alignment switch for 3 seconds.

During the alignment procedure, the System polls each receiver channel to measure excess gain and performs a coarse gain adjustment. When the System exits the alignment procedure, each channel's signal strength is stored in non-volatile memory. The System is now ready for operation and does not require re-alignment unless the emitter or receiver is moved.

4.2.2 Software Alignment Routine

The green LED indicator on the receiver and also on the control module continuously displays Alignment status. When all unblanked beams are clear, the green Alignment indicators are ON. To better understand blocked, clear, and blanked beams, launch the Alignment routine (press **F8** or select **Alignment** under the MINI-ARRAY menu). The screen shows the state of all of the beam channels, grouped into sets of 16.

Key information provided on the Alignment screen is the sensor size, plus the number of beams blocked, made, and blanked. The sensor size is given the title of Total; this refers to the total number of beam channels in the array. The number of beams blocked is a running total of blocked beams, excluding any blanked beams. The Made value is a count of unblocked beams. The Blanked value is a count of the number of beam channels that are blanked (channels that are ignored for measurement mode applications).

chanhvinh.com

The Alignment screen provides the following functions: Start, Stop, Step, Clear Blanking Fields, Restore Control module Settings, Auto Blanking, Abort Auto Blanking, Save to File, Read From File, Cancel, OK, and Edit. To access any of these sub-routines, first click **Stop**, then the selected option.

Start causes the control module to continuously scan and report All Channel Data. This data is used to update the state of each beam channel.

Stop causes the control module to stop scanning.

Step produces one scan and then stops until another command is issued.

Clear Blanking Fields is a quick way to remove blanking specifications.

Restore Control Module Settings recalls the blanking specifications in effect prior to Alignment/Blanking being entered.

Auto Blanking is used to scan and determine which beams are blocked; blocked beams automatically become blanked beams. The Auto Blanking values can then be **Accepted** or **Aborted**.

Edit is used to control the blanking specifications of any channel manually. This is useful for adding any number of blanked beam channels above and/or below a blanked object to allow for vibration or other movement of the object to be ignored.

Blanking specifications can be saved and read from a computer file using **Save To File** and **Read From File** commands.

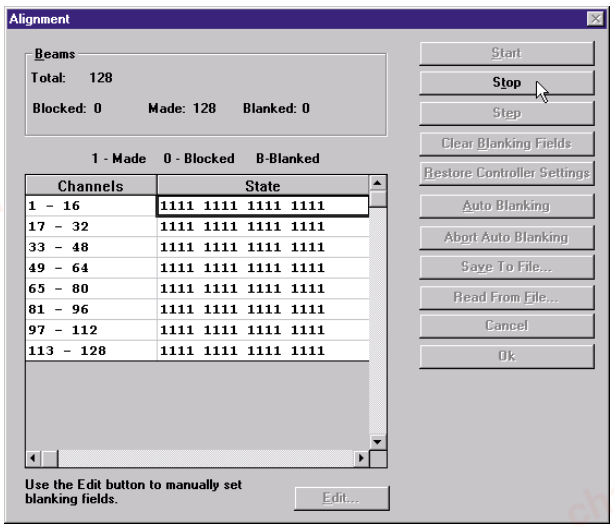

Figure 15. Alignment screen

4.2.3 Blanking

If a machine fixture or other equipment will continuously block one or more beams, the affected beam channels may be blanked. The Blanking option causes the control module to ignore the status of blanked beams for measurement mode calculations. For example, if a machine fixture blocks one or more beams during System operation, the output data will be incorrect; if beams blocked by the fixture are blanked, the output data will be correct. Blanking may be configured using the push-button Alignment switch on the control module, or by using the System software and a computer.

Push-Button Blanking Setup Routine

To specify blanking using the control module's Alignment switch, position the object or part to be ignored in the path of the beams before beginning the Alignment routine.

1. Press the Alignment switch for 3 seconds.
   The Diagnostics Indicator shows the letter **A**.
2. Press the Alignment switch momentarily (about 0.5 seconds maximum).
   The Diagnostics Indicator shows the letter **b** to indicate it is ready to learn the blanking pattern.
3. Press the Alignment switch momentarily (about 0.5 seconds maximum) to set the blanking fields.
   Both the control module and the receiver indicate a clear condition (green Align indicator ON) and the Diagnostics Indicator shows **A.** (the period following the A indicates that blanking is in use). The beams blocked during the routine are now blanked.
4. To return to Run mode, again press the Alignment switch for 3 seconds.
   When the System is ready for operation and configured for beams to be blanked, the period on the Diagnostics Indicator remains lit, showing **—.**.

chanhvinh.com

System Software Blanking Setup Routine

1. Position the object to be blanked in the path of the beams (this can be done at any time before beginning the blanking routine).
2. Perform the Ping routine to select the proper control module.
3. Press **F8** or select the **Alignment** option from the MINI-ARRAY menu.
4. From the screen menu, select **Stop**.
   The Diagnostics Indicator on the control module shows the letter **A**.
5. Select Auto Blanking.
   The Diagnostics Indicator shows the letter **b**.
6. Select **Accept Auto Blanking**.
   Both the control module and the receiver indicate a clear condition (green Align indicator ON) and the Diagnostics Indicator shows **A.** (the period following the A indicates that blanking is in use). The beams blocked during the routine are now blanked and appear as the letter **B** on the grid instead of **0**.

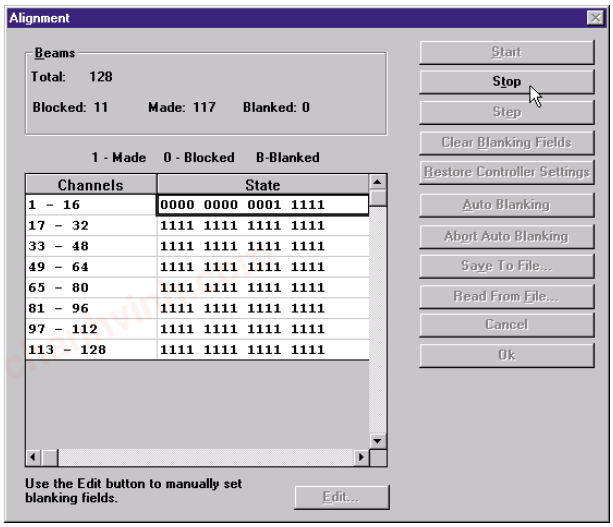

Figure 16. Alignment screen, showing beams #1-11 blocked

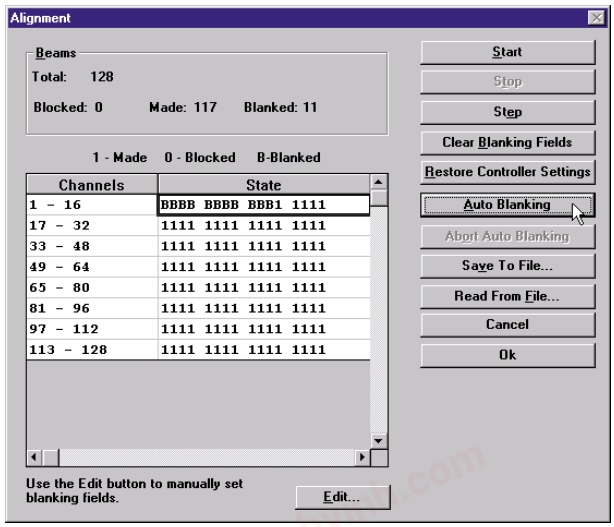

Figure 17. Alignment screen, showing beams #1-11 blanked

7. To blank additional beams, use **Edit** to manually set additional blanking (see *Scanning Mode Limitations for Blanking* (p. 16)).
8. To leave Alignment mode, click **OK**.
   When the System is ready for operation and configured for beams to be blanked, the period on the Diagnostics Indicator will remain lit, showing **—.**.

Scanning Mode Limitations for Blanking

All blanking features are available with Continuous Scan mode. For single-and double-edge scan, blanking is limited to four blanking fields. Other blanking features are ignored.

To accommodate parts or components that will move through the array, blanking may be manually adjusted for one or more individual beam channels.

1. After using the system software to specify blanking, select **Edit** from the Alignment screen.

   The Diagnostics Indicator continues to show the letter **b** and a grid displays on the computer screen. The beams are numbered from the sensors' cabled ends, with the beam closest to the cable being beam #1.

chanhvinh.com

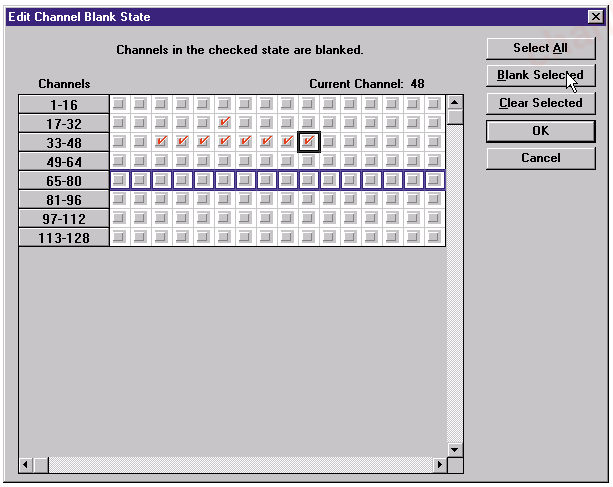

Figure 18. Edit channel blank state screen, showing beam #22 and beams #35-42 blanked; beams #65-80 are highlighted, ready to be selected for blanking

2. To set the blanking fields, click each grid box representing a beam you wish to blank.
3. Clicking again on a blanked beam channel removes the blanking specification.
4. To select or clear the blanking specification for several rows of channels, place the cursor directly to the left of the row to be selected and click the mouse. The rows highlight.
5. Select **Blank Selected** (to accept the blanking status) or **Clear Selected** (to reject the blanking status) option.
6. To leave Alignment mode, click **OK**.

   Both the control module and the receiver indicate a clear condition (green Align indicator ON) and the Diagnostics Indicator shows **A.**. When the system is ready for operation and configured for beams to be blanked, the period on the Diagnostics Indicator remains lit, showing **—.**.

4.3 Programming Control Module Response

Use the Parameter Setup File (PSF) Configuration routine to configure the control module for a specific application. After performing the Ping routine to select a control module, access the PSF Configuration screen by selecting **Edit PSF** (**F4**) from the MINI-ARRAY menu. The Edit PSF process may also be performed with no control module selected, to configure and save a PSF for multiple control modules. In such a case, some fields on the PSF Configuration screen will not be accessible.

The process of configuring the control module involves selecting among options for each of the parameters listed in this section, including serial communication, control mode, scanning method, scan analysis mode, serial transmission, and analog/discrete outputs. The resulting combination of options causes the control module to react as required for the application, to changes in the light screen.

The configuration process produces a Parameter Setup File (PSF). PSF files may be saved and retrieved as computer files via **File Save PSF** and **File Retrieve PSF** (see *Saving and Recalling PSF Files* (p. 25)) . After it is configured, a PSF may be sent to the control module via the **Send PSF** command. The PSF currently loaded into the control module may be displayed by using the **Upload PSF** command.

chanhvinh.com

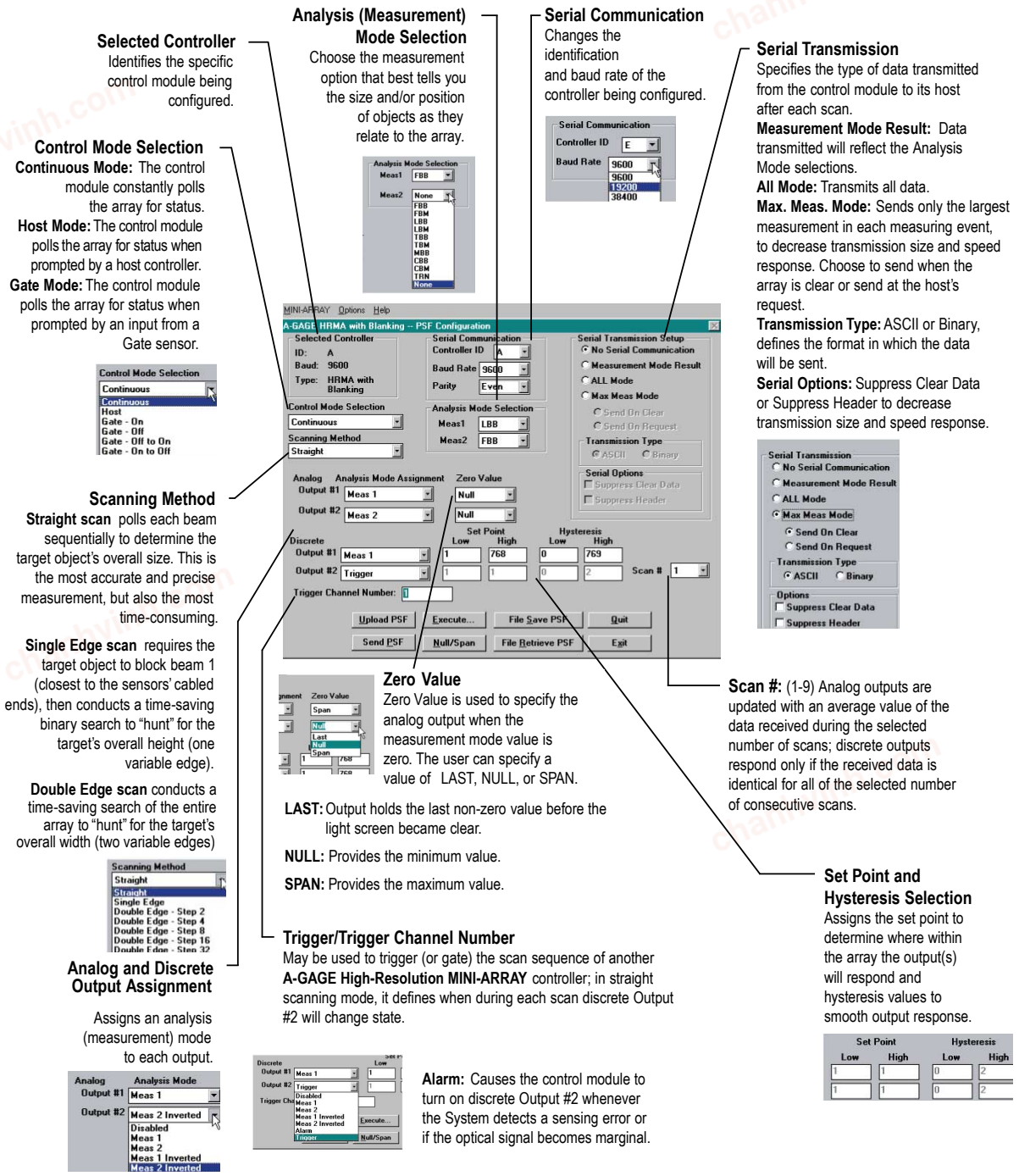

Figure 19. Use the PSF Configuration Screen to Program Each Control Module Individually

4.3.1 Selected Controller and Serial Communication

The Selected Controller box displays information about the control module being configured. Two of these settings may be changed in the Serial Communication box. The settings selected and displayed in these boxes are those used to identify the control module during the Ping routine.

Controller ID (assigned a letter, **A** through **O**) is used to identify each individual control module when multiple discrete-output control modules (up to 15) are connected on one EIA-485 party line.

Note: Analog output control modules do not offer RS-485 communication; choose any ID letter (**A** through **O**) when programming an analog-output control module.

chanhvinh.com

Baud Rate is the data communication rate between the control module and the computer used for configuration and also the process controller. Choose from three values: **9600**, **19200**, and **38400**.

Parity: Select **Odd**, **Even**, or **None**. All controllers on one EIA-485 party line should have the same parity settings.

4.3.2 Control Mode Selection

The control mode determines the method used to control scanning of the light screen array. Choose from three main control modes:

- Continuous Scan Mode
- Serial Host Command Mode
- Gate Mode, which has four options

In **Continuous Scan** mode, the control module begins a new scan as soon as it updates the outputs from the previous scan. This is the fastest scan control method; it is used in most analog output applications and whenever continuous updating of the outputs is acceptable.

Host mode allows the control module to communicate with a host computer or control module via RS-232 (all models) or RS-485 (discrete-output models only) serial protocol. The host directs the control module to scan on demand and receives the output data from the control module in binary or ASCII form. Baud rates of 9600, 19200, and 38400 are selectable in the Serial communications menu. See *Additional Information* (p. 35) for more information on Host mode data format.

Gate mode activates an optically isolated external Gate input between terminals 12 (+) and 13 (-) of the control module. The Gate input has impedance of 7.5 kΩ and accepts a 10 V dc to 30 V dc signal. A dc device such as a photoelectric sensor or optical encoder typically supplies the Gate input. Gate input signals must be greater than 150 microseconds in duration; the time between successive Gate inputs must be greater than the minimum scan time for the light screen array (see *Scanning Method* (p. 19) for scan time information).

Gate mode has four options:

- **Gate ON**: the control module will scan as long as the gate is active.
- **Gate OFF**: the control module will scan whenever the gate is not active.
- **Gate ON/OFF**: the control module will scan once for each gate transition from ON to OFF.
- **Gate OFF/ON**: the control module will scan once for each gate transition from OFF to ON.

4.3.3 Scanning Method

The control module may be configured for one of three scanning methods:

- Straight Scan
- Single-Edge Scan
- Double-Edge Scan

Straight scan is the default mode in which all beams are scanned in sequence from the bottom end (cable end) to the top end of the array. This scanning method requires the longest scan times and provides the smallest object detection size (2.5 mm, 0.1 in diameter).

Single-Edge scan is used to measure the height of a single object. A good application for this scanning method is box height measurement. For Single-Edge scan, the system always activates the first beam channel (nearest the cable end, or bottom). If the first beam is blocked, the sensor performs a binary search to hunt for the last beam blocked. Single-Edge scan works as follows:

1. The receiver scans only the bottom beam until that beam is blocked.
2. When the bottom beam is blocked, the sensor looks to see whether the middle beam is blocked or made (unblocked).
3. If the middle beam is made (unblocked), the sensor checks the bottom quarter beam; if the middle beam is blocked, the sensor checks the top quarter beam. This is called a binary search.
4. This routine continues to narrow the field until the edge is found.

chanhvinh.com

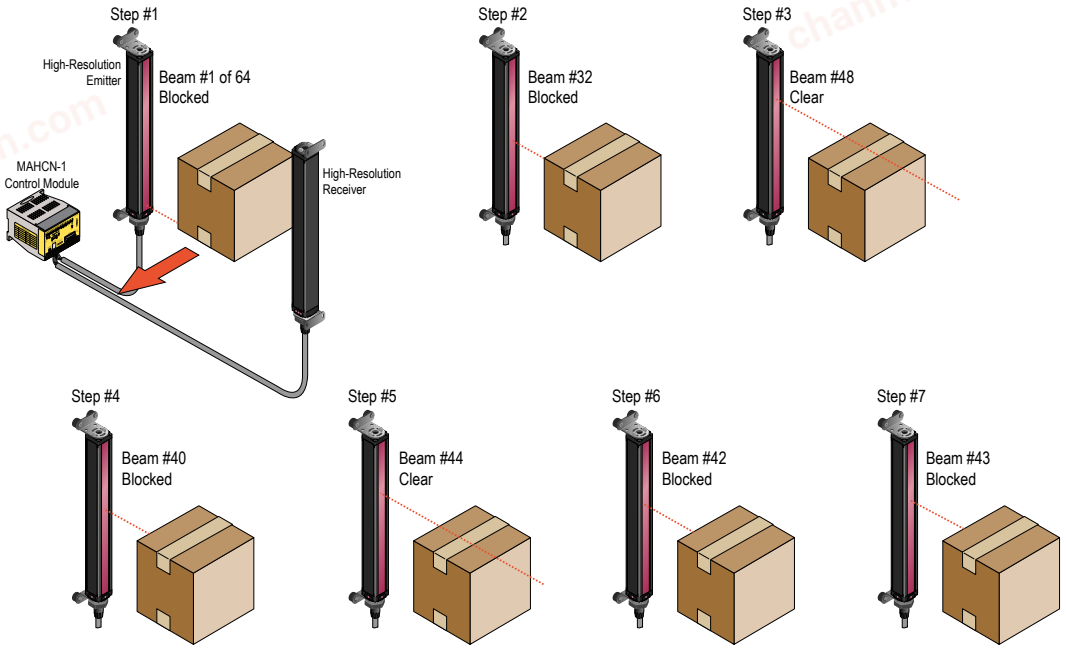

Figure 20. Finding an Edge Using a Binary Search

Note that the receiver always checks the bottom beam first, and only if that beam is blocked does the binary search continue. Therefore, Single-Edge scan will not work in instances where an item that does not block the first beam is to be measured. Single-Edge scan is also ineffective if the object does not present a continuous blocked pattern. In other words, Single-Edge scan is used for single, solid objects that block the first beam.

Double-Edge scan is used to detect two edges of a single object, for example, box width measurements. Double-Edge Scan requires the selection of a step size: 2, 4, 8, 16 or 32 beams. The sensor uses the steps to skip over beams. Double-Edge scan works as follows:

1. The sensor activates beam #1 (the beam closest to the sensor cable end).
2. The sensor activates the next beam, determined by the step size. For example, if the step size is 2, beam #3 is next; if the step size is 8, beam #9 is next.
3. As long as the activated beam is unblocked (or made), the sensor continues the stepping routine until a blocked beam is found.
4. When a blocked beam is found, a binary search is conducted to find the object's bottom edge.
5. When the bottom edge is found, the sensor begins stepping again through the array until the sensor finds the next unblocked beam.
6. A binary search is again performed to find the second edge.

Note that this scanning method sacrifices object detection size for speed. Similar to Single-Edge scan, Double-Edge scan has some restrictions: the object should provide a solid obstruction; the size of the object will determine the maximum step size.

Table 1: The Effect of Step Size on Minimum Object Detection Size

Step Size	Number of Beams				
	2	4	8	16	32
Minimum Object Detection Size	5 mm (0.2 in)	10 mm (0.4 in)	20 mm (0.8 in)	40 mm (1.6 in)	80 mm (3.2 in)

Sensor response time is a function of sensor length and scanning method. Typical scan times are shown in the following table.

Table 2: The Effect of Sensor Length and Scanning Method on Scan Time (Typical)

Maximum Scan Time (in milliseconds)							
Array Length	Straight Scan	Single-Edge Scan	Double-Edge Scan				
			Step 2 Beams	Step 4 Beams	Step 8 Beams	Step 16 Beams	Step 32 Beams
163 mm (6.4 in)	5.8	1.8	4.8	3.4	2.7	2.5	2.6

chanhvinh.com

Maximum Scan Time (in milliseconds)							
Array Length	Straight Scan	Single-Edge Scan	Double-Edge Scan				
			Step 2 Beams	Step 4 Beams	Step 8 Beams	Step 16 Beams	Step 32 Beams
325 mm (12.8 in)	10.6	1.9	8.1	5.1	3.6	3.0	2.7
488 mm (19.2 in)	15.0	2.1	11.5	6.8	4.5	3.4	3.0
650 mm (25.6 in)	20.1	2.1	14.9	8.5	5.3	3.9	3.2
812 mm (32.0 in)	24.9	2.1	18.3	10.1	6.1	4.2	3.5
975 mm (38.4 in)	30.0	2.1	21.7	11.8	7.0	4.7	3.6
1138 mm (44.8 in)	34.5	2.1	25.0	13.5	7.9	5.1	3.8
1300 mm (51.2 in)	39.3	2.1	28.4	15.2	8.7	5.5	4.1
1463 mm (57.6 in)	44.0	2.2	31.8	16.9	9.5	5.9	4.3
1626 mm (64.0 in)	48.0	2.3	35.1	18.6	10.4	6.4	4.5
1788 mm (70.4 in)	53.6	2.3	38.5	20.3	11.2	6.8	4.7
1951 mm (76.8 in)	58.4	2.3	41.9	21.9	12.1	7.2	4.9

Note: Scan times are exclusive of serial communication transmission times.

chanhvinh.com

4.3.4 Scan Analysis Mode Selection

The control module may be programmed, if desired, for any one or two of seven Scan Analysis (measurement) Modes. Each selected mode may be assigned individually to an output (see section *Analog Output Configuration (Analysis Mode Assignment)* (p. 22) or *Zero Value* (p. 23)). The beams in the array are numbered in sequence, with beam #1 located at the cabled end of the emitter and the receiver.

Beam Location Modes

- First Beam Blocked (FBB): The control module identifies the location of the First Beam Blocked.
- First Beam Made (FBM): The control module identifies the location of the First Beam Made (unblocked).
- Last Beam Blocked (LBB): The control module identifies the location of the Last Beam Blocked.
- Last Beam Made (LBM): The control module identifies the location of the Last Beam Made (unblocked).
- Middle Beam Blocked (MBB): The control module identifies the location of the Middle Beam Blocked, midway between the first and last beams blocked.

Beam Total Modes

- Total Beams Blocked (TBB): The control module totals the number of blocked beams.
- Total Beams Made (TBM): The control module totals the number of made (unblocked) beams.
- Contiguous Beams Blocked (CBB): The control module identifies the largest number of consecutively blocked beams.
- Contiguous Beams Made (CBM): The control module identifies the largest number of consecutively made beams.
- Transitions (TRN): The control module counts changes from blocked to clear and clear to blocked. For instance, if beams 6-34 are blocked, then there is a clear-to-blocked transition from beam 5 to beam 6, and a blocked-to-clear transition from beam 34 to beam 35. Transition mode can be used to count objects within the array.

The Analysis Mode(s) programmed may be assigned to any one of the available outputs. Each output can be set for **MEAS1**, **MEAS2**, **MEAS1 Inverted**, or **MEAS2 Inverted**.

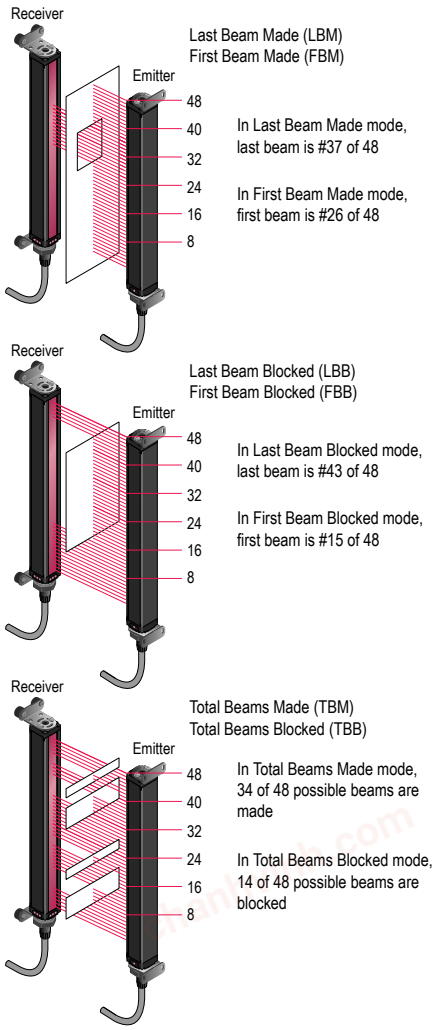

Figure 21. Examples of MINI-ARRAY Scan Analysis Modes

4.3.5 Analog Output Configuration (Analysis Mode Assignment)

Analog outputs #1 and #2 may each be assigned to one of the analysis modes. When the selected Scan Analysis Mode involves first or last beam blocked or made (unblocked), the assigned output will vary in proportion to the beam number identified during a scan. When the Scan Analysis Mode involves total beams blocked or made, that assigned output will vary in proportion to the total beams counted during a scan.

Note that the menus used for assignment of the Scan Analysis Modes to the analog outputs include two Inverted selections. When either **MEAS1 Inverted** or **MEAS2 Inverted** is selected, that analog output will decrease as the measurement mode value increases. An inverted output is at full scale (**Span** value) when the scan analysis value is zero; and at maximum scan analysis value, the output is at the **Null** value.

The Null/Span Configuration screen , may be used to adjust the zero and full scale reading for either analog output. To display the Null/Span Configuration screen, click on the Null/Span button at the bottom of the PSF Configuration screen. Each output is independent and must be adjusted separately. Adjust the **Null** and **Span** values either by moving the slide bars, or by entering a new value on the keyboard.

Note: When in the Null/Span screen, the controller has a diagnostic code of 8.

chanhvinh.com

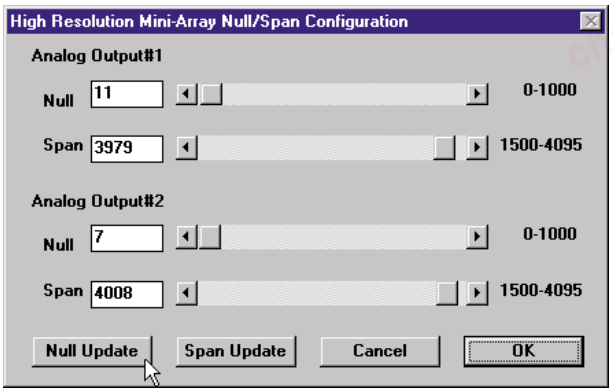

Figure 22. Null/Span Configuration screen

To Measure:

Analog Voltage Output: Connect the voltmeter between terminals 10 or 16 (+) and 17 (–).
Analog Current Output: Connect the ammeter between terminals 10 or 16 (–) and 1 (+).

Analog Output Type	Null		Span	
	Minimum	Maximum	Minimum	Maximum
Voltage	10 mV	2.3 V	4.8 V	10.1 V
Current	3.9 mA	7.8 mA	11.9 mA	20.2 mA

Adjust the Null and Span ranges as follows:

1. To read the new values on the meter, click **Null** or **Span Update**.
2. Click **OK** to save the new settings and return the program to the **PSF Configuration** screen. Clicking **Cancel** returns the program to the previously saved null and span settings.

Note: Null and Span are factory set to specified values and usually require no changes.

Scan # provides a way to smooth output response and avoid unstable analog output conditions. The menu allows selection of 1 to 9 scans. For analog outputs, if scan # is set at more than 1, the scan analysis value is averaged for all of the selected number of consecutive scans, preventing dips and spikes in the outputs.

For total beam values (TBB and TBM analysis modes), programming of blanked beams will affect the proportional analog outputs. Blanked beams are ignored both in the number of blocked or made beams and the total number of beams. For example, if a 64-beam array has 20 blanked beams and 22 of the remaining 44 beams are blocked, the output values will be at mid-range.

4.3.6 Zero Value

Zero value is used to specify the analog output when the measurement mode value is zero. Select an analog output of Last, Null, or Span.

Last: Output holds the last non-zero value before the light screen became clear.

Null: Provides the minimum value.

Span: Provides the maximum value.

4.3.7 Discrete Output Configuration (Analysis Mode Assignment)

Discrete outputs #1 and #2 (Alarm) may each be individually assigned to one of the Scan Analysis Modes programmed in *Scan Analysis Mode Selection* (p. 22).

chanhvinh.com

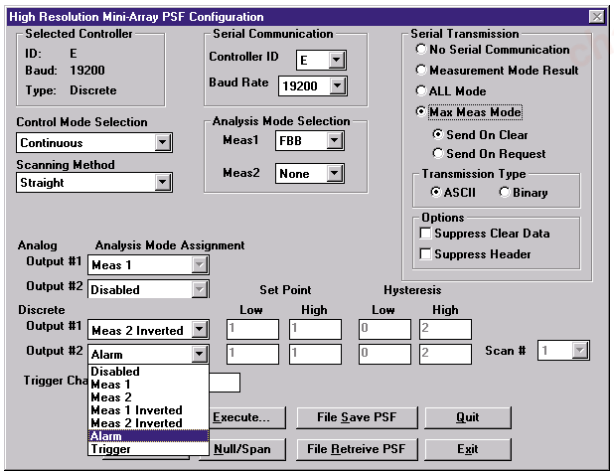

Figure 23. Assigning an Analysis Mode to each Discrete output (PSF Configuration screen); Alarm and Trigger output options are available only for Discrete Output #2

Next to each discrete output assignment menu are **Low Set Point** and **High Set Point** boxes. The number in each box identifies a beam in the array (beam #1 being closest to the cabled end of the emitter and the receiver). Change the Low and High Set Points by clicking on a box and entering a new number.

When the selected Scan Analysis Mode involves first or last beam blocked or made (unblocked), the assigned output will energize when the beam identified during a scan falls within the range of the set points. When the Scan Analysis Mode involves total beams blocked or made, that assigned output will energize when the value of total beams counted during a scan falls within the range of the set points.

Note that the menus used for assignment of the Scan Analysis Modes to the discrete outputs include two Inverted selections. When either **MEAS1 Inverted** or **MEAS2 Inverted** is selected, that discrete output will de-energize (turn OFF) whenever a scan analysis value falls within the range of the set points.

Hysteresis values for each end of the set point range may also be set. Hysteresis determines the amount of change that must occur at each set point (High and Low) to cause the associated output to change state. Hysteresis prevents unstable output conditions when the scan analysis value exactly matches one of the set points. The default hysteresis setting is one beam less than the Low Set Point and one beam more than the High Set Point.

Scan # provides another way, in addition to hysteresis settings, to smooth output response. Outputs are updated only after the selected number of identical (within the hysteresis limits) scans. The menu allows selection of 1 to 9 scans. For discrete outputs, the scan analysis value must stay either inside or outside the hysteresis limits for all of the selected number of consecutive scans, in order for the output to respond.

Alarm and Trigger

Discrete output #2 (only) has two additional options: Alarm and Trigger.

Alarm: Output #2 energizes whenever the System detects a sensor error (such as a disconnected cable) or whenever the excess gain of one or more beams becomes marginal.

Trigger: can be used to gate a second control module when Continuous Scan Method is also used. When the control module is in straight scanning mode, **Trigger Channel Number** defines the beam number during a scan at which the trigger output will occur. The Trigger output is a 100 microsecond (0.0001 second) pulse. If the control module is set for single or double edge scan, the Trigger pulse comes at the end of the scan (Trigger Channel Number is ignored).

4.4 Serial Communication with a Host Controller

The control module communicates with a host process controller via RS-232 or RS-485 protocol and at the baud rate specified in the Serial Communications box. The System provides a number of data transmission options.

4.4.1 Serial Data Transmission

The serial transmission portion of the PSF Configuration screen activates the serial port(s), specifies the data format, and provides data suppression options. These settings are required to allow a control module to communicate with a host computer or process controller. If No Serial Communication is selected (the default setting), the serial port(s) will not transmit sensing data.

Measurement Mode Result: Data transmitted are the values output for the Scan Analysis Mode selections. Up to two Scan Analysis Mode selections can be active.

chanhvinh.com

ALL Mode: The status of each beam in the light screen array is transmitted for each scan. In ALL mode, blanked channels are transmitted as unblocked (or clear) beams.

Max Meas Mode: The control module records the maximum measurement value registered while the light screen is blocked. That data may be transmitted to the host either when the array is clear at the end of the sensing event (select **Send On Clear**), or when prompted by the host (select **Send On Request**). This mode reduces the amount of serial data sent.

4.4.2 Transmission Type

Transmission type defines the format in which data is sent. The **ASCII** option causes the control module to send data in three ASCII-coded bytes. The **Binary** option causes data to be sent in binary format, reducing the amount of data per measurement mode from three bytes to two. For more information on the data formats, refer to *Additional Information* (p. 35).

4.4.3 Serial Options

The Serial Options box provides two options: **Suppress Clear Data** and **Suppress Header**.

Suppress Clear Data provides one method to reduce the amount of data being transmitted by the control module, accomplished by not sending data when no object is detected. The control module transmits serial data only when one or more unblanked beams of the light screen array are blocked. When the array goes from blocked to clear, data is sent one additional time, indicating the clear condition.

Suppress Header is used to prevent transmission of the three-byte identification string (“header string”) associated with either ASCII or Binary data formats. The header string consists of two bytes at the start of the data, and a termination byte to mark the end of the serial transmission. See *Additional Information* (p. 35) for more information on serial data formats.

4.5 Transfer of PSF to the Control Module

After making all of the selections in the PSF Configuration screen, send the PSF to the control module by clicking **Send PSF**. This command loads the PSF into the non-volatile memory of the control module, and automatically overwrites the current PSF. The program confirms that the PSF was accepted, or notifies the user of changes required to the PSF.

To check the values of the PSF currently loaded into the control module, select **Upload PSF**. The current PSF displays on the PSF Configuration screen.

4.5.1 Saving and Recalling PSF Files

To place the displayed PSF into a file that can be retrieved at any time:

1. Click **File Save PSF**.
2. When asked if you want to save the PSF to a file, select **Yes**. A subscreen titled **FileSave** displays.
3. Overtype ***.psf** in the File Name entry box with the name of the file to be stored (up to 8 characters), plus the .psf extension.
4. Click **OK** (or press **Enter**).

The PSF is stored on the selected drive (default is **c:**) and the program automatically returns to the PSF Configuration screen.

To retrieve a filed PSF:

1. Click **File Retrieve PSF**. The **FileBox** subscreen displays.
2. Select the desired PSF from the **File Name** list.
3. Click **OK** (or press **Enter**).

The selected PSF loads to the PSF Configuration screen, and it can then be loaded into the controller using the **Send PSF** command.

4.5.2 PSF Output Analysis

To view activity in the array in response to the currently loaded PSF:

1. Select **Execute**. The Measurement Output screen displays.

chanhvinh.com

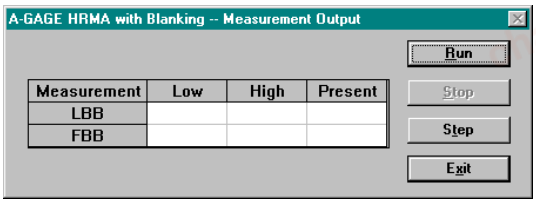

Figure 24. Measurement Output Screen

2. Select **Run**. The table displays the status for the selected measurement mode(s), including the Present value and the High and Low values for the Run period.
3. Select **Stop** to freeze the data.
4. Select **Step** to initiate a single scan of the array to simulate a snapshot of what is viewed by the array at the instant that **Step** is selected.

Use of the **Execute** command is beneficial for testing the response of a gated system. **Run** simulates the Continuous Scanning mode, and **Step** simulates a gate input command.

4.5.3 Quit and Exit

To close the PSF Configuration screen, select either **Quit** or **Exit**. Selecting Quit erases the Edit PSF Screen and sends the user back to the Main Window; the present PSF Screen values are not retained. The Exit command is similar to the Quit command, except the user is prompted to save the configuration values to a parameter setup file (PSF).

chanhvinh.com

5 System Diagnostics

Perform System diagnostics by using the status and diagnostics indicators on the control module and sensors, or by using the diagnostics software routine, or by a combination of the two.

5.1 Diagnostic Indicators

Bright, easy-to-see LED indicators on both sensors and on the front panel of the control module provide an ongoing display of the system's operating status.

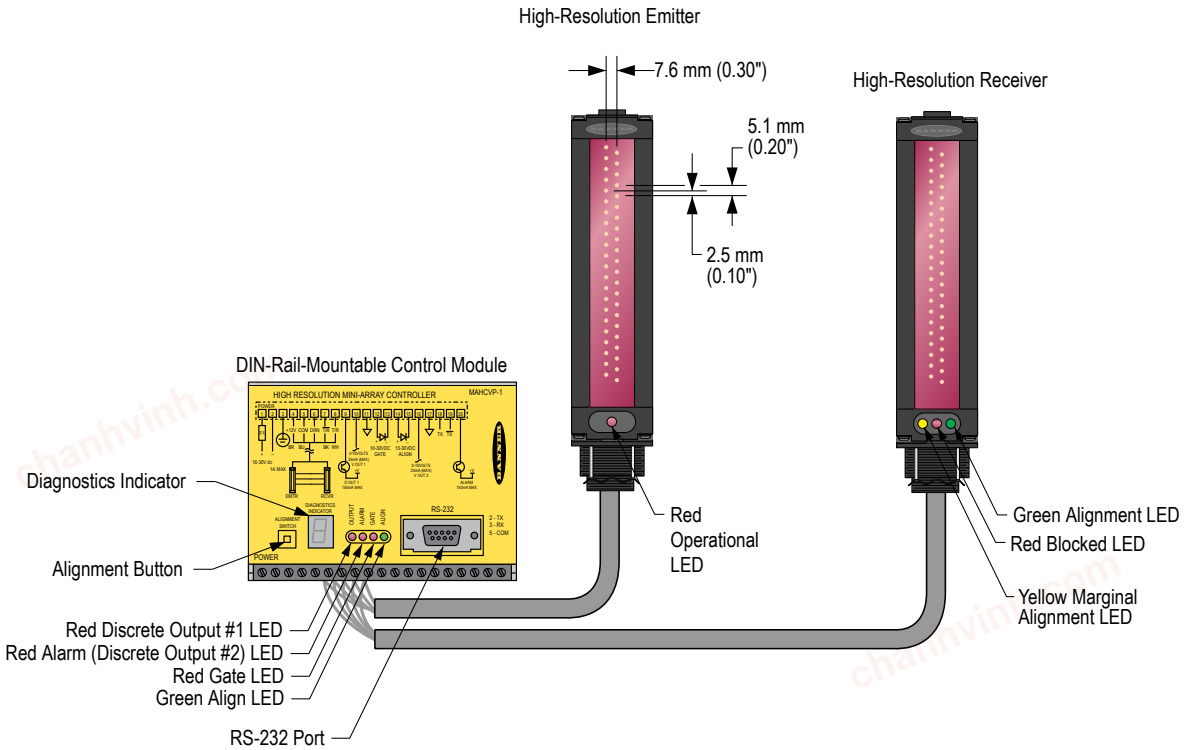

Figure 25. A-GAGE High-Resolution MINI-ARRAY System Diagnostics and Status Indicators

Note: Status indicators appear to freeze if the controller has been configured for Gate or Host mode, and no signal is present to cause a scan update.

Control Module

OUTPUT (red): Displays the status of Discrete Output #1.

ALARM (red): Displays the status of Discrete Output #2. This output may be assigned to an analysis mode, or it may be used as a system diagnostics alarm or as a trigger alarm to gate another A-GAGE High-Resolution MINI-ARRAY System.

GATE (red): Displays the status of the gate input.

ALIGN (green): Indicates proper emitter/receiver alignment and a clear, unblocked light screen. This indicator is ON when either the green or both the green and yellow LEDs of the receiver are ON.

Diagnostics Indicator: This bright, segmented LED display on the control module front panel indicates one of ten system status conditions, plus the presence or absence of blanking. Blanking ON causes a period to appear in the Diagnostics Indicator window, in addition to the System's other status condition. See the table for the key to these error types and status conditions; this chart is also located on the side of the control module.

Table 3: Key to System Diagnostics Indicator codes

Error Number	Error Type	Action
–	System is OK	None
A / b	Align / blank	Status

chanhvinh.com

Error Number	Error Type	Action
1	Output Short	Check output load & wiring
2	E / R Mismatch	System must use same length emitter and receiver
3	Receiver Error	• Check receiver cable • Replace receiver
4	Emitter Error	• Check emitter cable • Replace emitter
5	Serial Comm	Check serial cable
6	EEPROM	• Reconfigure PSF • Replace control module • Reconfigure blanking
7	CPU Error	Replace control module
8	Null / Span	Status

Emitter

OPERATIONAL (red): LED indicates power to the emitter is ON, and unit is operational.

Receiver

BLOCKED (red): LED indicates some of the array beams are blocked.

MARGINAL (yellow): LED indicates that array alignment is marginal.

ALIGNMENT (green): LED indicates that array alignment is satisfactory.

To improve alignment, adjust the position of the emitter and receiver until the green LED lights, making sure that no unblanked beams are interrupted. Then use one of the methods in *System Alignment* (p. 14) to realign the system.

5.2 Diagnostics Routine

Emitter or receiver problems may be further diagnosed using the Diagnostics routine included with the MINI-ARRAY software. Launch the program by selecting **Diagnostics** under the MINI-ARRAY menu or by pressing **F2**.

The **Diagnostics** screen displays the size of each emitter and receiver (expressed in the number of 64-element boards it contains) and its functional status (or state). If an error has occurred, the specific problem beam channel is identified. Additionally, if there is a problem with an emitter or receiver cable connection, a “No Response” message displays.

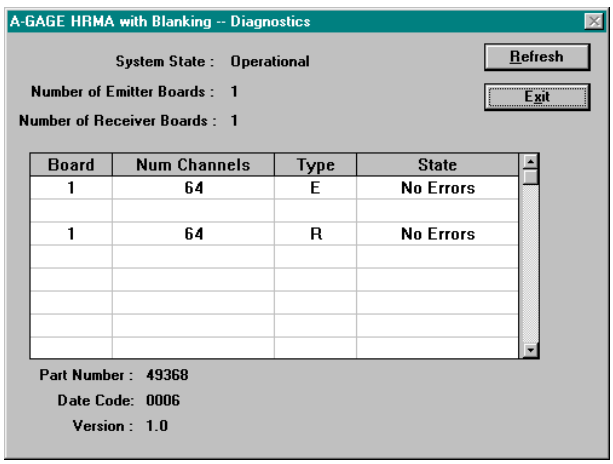

Figure 26. Diagnostics screen, accessible from the MINI-ARRAY menu

The Diagnostics routine also displays the part number and date code of the controller, information that may be useful if Banner-assisted troubleshooting is required.

chanhvinh.com

6 Specifications

6.1 Emitter and Receiver Specifications

Emitter/Receiver Range
380 mm to 1.8 m (15 in to 6 ft)

Minimum Object Sensitivity
2.5 mm (0.1 in)

Construction
Aluminum, with black anodized finish; acrylic lens cover

Status Indicators
Emitter: Red LED lights to indicate proper emitter operation
Receiver:
Green indicates sensors aligned
Yellow indicates marginal alignment of one or more beams
Red indicates sensors misaligned or one or more beam(s) blocked

Connections
Sensors connect to controller using two 5-conductor quick-disconnect cables (one each for emitter and receiver), ordered separately
Use only Banner cables, which incorporate a “twisted pair” for noise immunity
Cables measure 8.1 mm (0.32 in) in diameter and are shielded and PVC-jacketed
Conductors are 20 gauge (0.9 mm)
Emitter and receiver cables may not exceed 75 m (250 ft) long, each

Environmental Rating
NEMA 4, 13 (IEC IP65)

Operating Conditions
0 °C to +50 °C (+32 °F to +122 °F)
95% at +50 °C maximum relative humidity (non-condensing)

Certifications

Sensor Scan Time
1.8 milliseconds to 58.4 milliseconds, depending on scanning method and sensor length
See *Scanning Method* (p. 19) for detailed information

Power Requirements
12 V dc ± 2%, supplied by controller

Required Overcurrent Protection

WARNING: Electrical connections must be made by qualified personnel in accordance with local and national electrical codes and regulations.

Overcurrent protection is required to be provided by end product application per the supplied table.
Overcurrent protection may be provided with external fusing or via Current Limiting, Class 2 Power Supply.
Supply wiring leads < 24 AWG shall not be spliced.
For additional product support, go to *www.bannerengineering.com*.

Supply Wiring (AWG)	Required Overcurrent Protection (Amps)
20	5.0
22	3.0
24	2.0
26	1.0
28	0.8
30	0.5

chanhvinh.com

6.2 Emitter and Receiver Dimensions

All measurements are listed in millimeters [inches], unless noted otherwise.

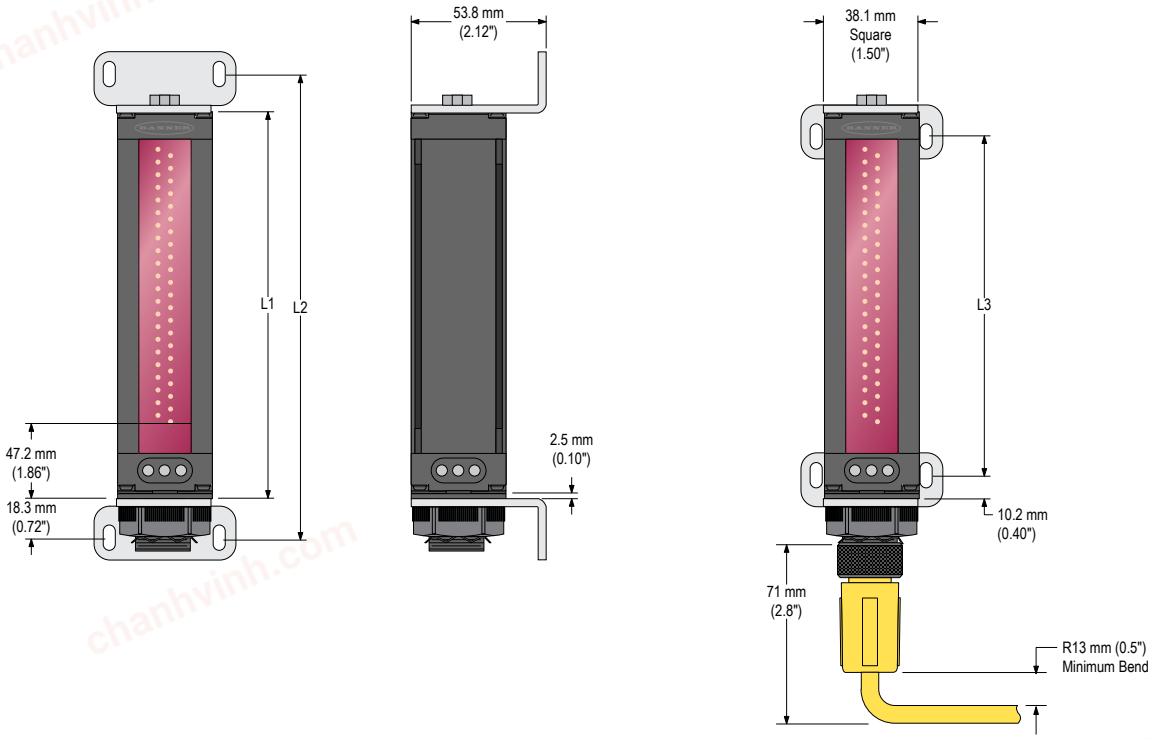

Figure 27. Emitter and Receiver Dimensions

Model		Housing Length	Distance Between Bracket Holes	
Emitter	Receiver	L1	L2	L3
MAHE6A Emitter	MAHR6A Receiver	236 mm (9.3 in)	268 mm (10.5 in)	211 mm (8.3 in)
MAHE13A Emitter	MAHR13A Receiver	399 mm (15.7 in)	430 mm (16.9 in)	373 mm (14.7 in)
MAHE19A Emitter	MAHR19A Receiver	561 mm (22.1 in)	593 mm (23.3 in)	536 mm (21.1 in)
MAHE26A Emitter	MAHR26A Receiver	724 mm (28.5 in)	756 mm (29.7 in)	699 mm (27.5 in)
MAHE32A Emitter	MAHR32A Receiver	887 mm (34.9 in)	918 mm (36.2 in)	861 mm (33.9 in)
MAHE38A Emitter	MAHR38A Receiver	1049 mm (41.3 in)	1081 mm (42.6 in)	1024 mm (40.3 in)
MAHE45A Emitter	MAHR45A Receiver	1215 mm (47.8 in)	1246 mm (49.1 in)	1189 mm (46.8 in)
MAHE51A Emitter	MAHR51A Receiver	1377 mm (54.2 in)	1409 mm (55.5 in)	1352 mm (53.2 in)
MAHE58A Emitter	MAHR58A Receiver	1540 mm (60.6 in)	1572 mm (61.9 in)	1515 mm (59.6 in)
MAHE64A Emitter	MAHR64A Receiver	1703 mm (67.0 in)	1734 mm (68.3 in)	1677 mm (66.0 in)
MAHE70A Emitter	MAHR70A Receiver	1865 mm (73.4 in)	1897 mm (74.7 in)	1840 mm (72.4 in)
MAHE77A Emitter	MAHR77A Receiver	2028 mm (79.8 in)	2060 mm (81.1 in)	2003 mm (78.8 in)

chanhvinh.com

6.3 Emitter/Receiver Mounting Bracket Dimensions

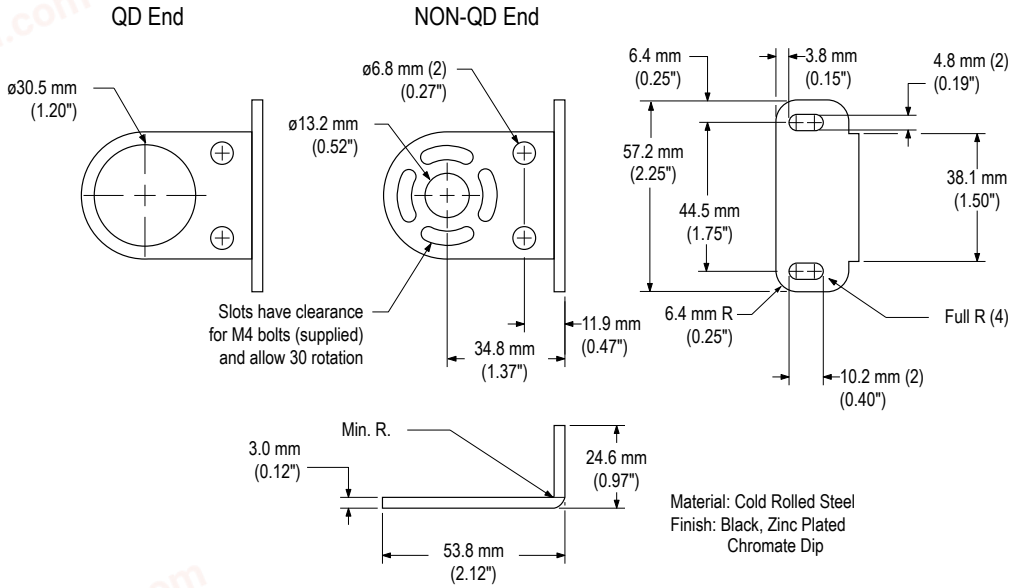

Figure 28. Emitter/Receiver Mounting Bracket Dimensions

6.4 Control Module Specifications

Power Requirements
16 V dc to 30 V dc at 1.0 A (typical: 0.5 A at 16 V dc)

Output Configuration
MAHCVP-1: Two PNP discrete (switched), two 0 V to 10 V voltage sourcing
MAHCVN-1: Two NPN discrete (switched), two 0 V to 10 V voltage sourcing
MAHCIP-1: Two PNP discrete (switched), two 4 mA to 20 mA current sinking
MAHCIN-1: Two NPN discrete (switched), two 4 mA to 20 mA current sinking

Construction
Polycarbonate housing; mounts to flat surface or directly onto 35 mm DIN rail

Environmental Rating
Control Module: NEMA 1, IEC IP20
Emitter/Receiver: NEMA 4, 13; IEC IP65

Operating Conditions
0 °C to +50 °C (+32 °F to +122 °F)
95% at +50 °C maximum relative humidity (non-condensing)

chanhvinh.com

Inputs

Sensor input: Emitter and receiver wire in parallel to five terminals.
Gate input: Optically isolated, requires 10 V dc to 30 V dc (7.5 kΩ impedance) for gate signal
Remote alignment input: Optically isolated, requires 10 V dc to 30 V dc (7.5 kΩ impedance) for alignment sequence signal

Discrete (Switched) Outputs

NPN outputs: Open collector NPN transistor rated at 30 V dc maximum, 150 mA maximum
PNP outputs: Open collector PNP transistor rated at 30 V dc maximum, 150 mA maximum
All discrete outputs:

OFF-state leakage current: < 10 µA at 30 V dc
ON-state saturation voltage: < 1 V at 10 mA and < 1.5 V at 150 mA

Analog Outputs

Voltage-sourcing outputs: 0 V dc to 10 V dc (25 mA current limit)
Current-sinking outputs: 4 mA to 20 mA (16 V dc to 30V dc input)
Resolution: Span / Number of sensing channels
Linearity: 0.1% of full scale
Temperature variation: 0.01% of full scale per °C

Serial Data Outputs

RS-232 or RS-485 interface. (Up to 15 control modules may be given unique addresses on one RS-485 party line.)
ASCII or binary data format
9600, 19.2 K, or 38.4 K baud rate
8 data bits, 1 stop bit, and even, odd, or no parity

System Programming

Via RS-232 interface to PC-compatible computer running Windows® XP, Vista, or 7[3] and using software supplied with each control module.

Status Indicators

Output 1 (red): Lights to indicate Discrete Output #1 is active
Alarm (red): Lights to indicate Discrete Output #2 is active
Gate (red): Lights to indicate GATE input is active
Align (green): Lights to indicate emitter and receiver are aligned
Diagnostics indicator: (Key on controller side label) Identifies system errors and status

Required Overcurrent Protection

WARNING: Electrical connections must be made by qualified personnel in accordance with local and national electrical codes and regulations.

Overcurrent protection is required to be provided by end product application per the supplied table.
Overcurrent protection may be provided with external fusing or via Current Limiting, Class 2 Power Supply.
Supply wiring leads < 24 AWG shall not be spliced.
For additional product support, go to *www.bannerengineering.com*.

Supply Wiring (AWG)	Required Overcurrent Protection (Amps)
20	5.0
22	3.0
24	2.0
26	1.0
28	0.8
30	0.5

Certifications

[3] Microsoft and Windows are registered trademarks of Microsoft Corporation in the United States and/or other countries.

chanhvinh.com

6.5 Control Module Dimensions

All measurements are listed in millimeters [inches], unless noted otherwise.

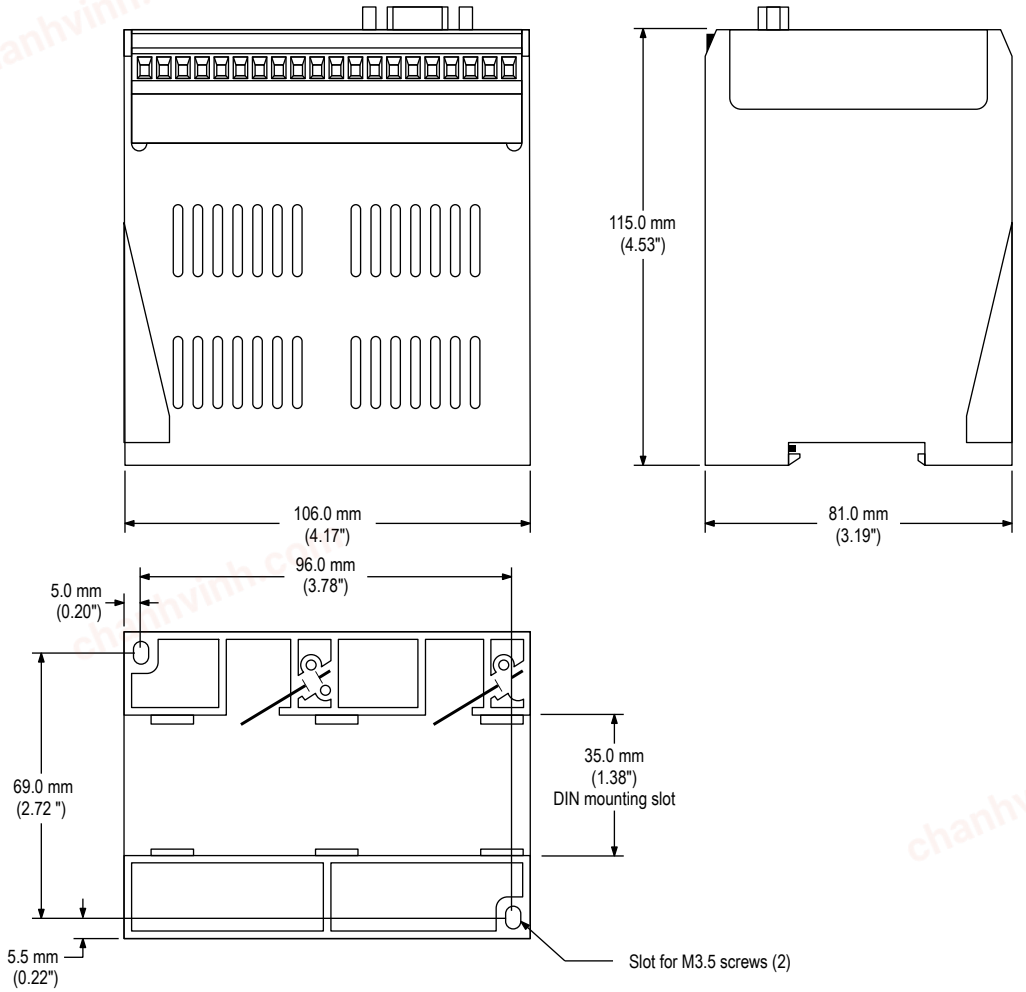

Figure 29. Control Module Dimensions

chanhvinh.com

7 Accessories

7.1 Cordsets

5-Pin Mini-Style Cordsets with Shield—Single Ended				
Model	**Length**	**Style**	**Dimensions**	**Pinout (Female)**
QDC-515C	4.57 m (15 ft)	Straight	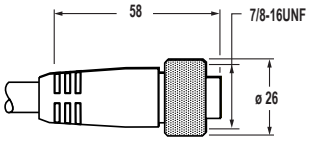	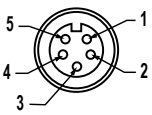 1 = Black 2 = Blue 3 = Drain 4 = Brown 5 = White
QDC-525C	7.62 m (25 ft)			
QDC-550C	15.2 m (50 ft)			

Communication Cable				
Model	**Length**	**Style**	**Dimensions**	**Pinout (Female)**
MASC	2 m (6.5 ft)	DB9, straight RS-232 cable	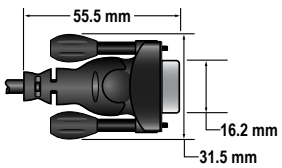	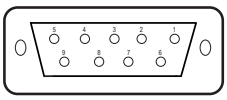

chanhvinh.com

8 Additional Information

8.1 Host Mode Command String

As discussed in this manual, the control module has three control mode options: continuous, gate, and host. Host mode requires a serial transmission string from a separate device, typically a PC or process controller. The serial transmission medium can be either RS-485 or RS-232.

When Host control mode is selected, the host process controller initiates scans using a command string. The command string is a three-byte message, consisting of:

- Control byte with decimal value 248
- Controller ID (the identification of a specific control module on the string, indicated by one of 15 ASCII letters A through O, and specified in the PSF)
- Scan initiation byte (ASCII letter S)

The command string is further defined as follows:

```
/*the below C code will define an array called msg that will contain the Host Scan Command */
unsigned char msg[3]; /*declare three byte unsigned character array using C language */
msg[0]=248; /*control byte */
msg[1]=65; /*assume the controller ID is the letter A */
msg[2]=83; /*assume initiation byte which is the ASCII letter S */
```

The host transmits this three-byte message at the defined baud rate. The format is one start bit, one stop bit, even parity, and eight data bits. When the control module receives this message, it initiates a scan (assuming Host mode is selected) and then updates its outputs as required. The control module then waits for the next Host Command message before initiating another scan.

8.2 Serial Data Format and Header String

The programmed measurement mode or modes determine the type of information that is serially transmitted. For example if Meas1 is set for FBB and Meas2 is set for LBB, then the data transmitted to the host contains the values of the first and last beam blocked. The All measurement mode provides the status of all beams to the host.

In addition to measurement mode information, the data transmission also contains a two-byte start string and a termination byte. The start string consists of a first byte that does not change, followed by the controller ID. The first byte value is a hex 1C or 28 decimal. At the end of the string, the control module will place a termination byte. The termination bye is the ASCII character for a linefeed (hex value 0A). These three bytes collectively are called the Serial Header string.

8.2.1 ASCII Format Data Transmission

There are two ways to use ASCII format to represent data. The one used depends upon which measurement modes are selected.

chanhvinh.com

For ALL measurement mode, each data byte is presented in an eight-bit ASCII format that conveys the status of four consecutive channels (four consecutive beams). Each subsequent byte conveys the status of the next four channels, until the status of every channel is reported. The allowable data values for All measurement mode are ASCII numbers 0 to 9 and ASCII letters A to F. In the table, a 0 represents an unblocked beam channel, and 1 represents a blocked channel.

Table 4: Definitions for ASCII Data Values For the ALL Measurement Mode

Character	Ch 4	Ch 3	Ch 2	Ch 1
F	1	1	1	1
E	1	1	1	0
D	1	1	0	1
C	1	1	0	0
B	1	0	1	1
A	1	0	1	0
9	1	0	0	1
8	1	0	0	0
7	0	1	1	1
6	0	1	1	0
5	0	1	0	1
4	0	1	0	0
3	0	0	1	1
2	0	0	1	0
1	0	0	0	1
0	0	0	0	0

For example, assume that a 64-channel system has been configured for the All measurement Serial transmission option. Channels 1 through 4 are blocked, as is channel 63. The serial string starts with 0x1c, and the ID (assume an ‘A’) followed by 16 ASCII values and terminated with 0x0A. The string would appear:

```
0x1c, 'A', 'F', '0','0', '0','0', '0','0', '0','0', '0','0', '0','0', '0','0', '0','4', 0x0a
```

The string shows that beams 1 through 4 are blocked, as is beam 63. All other beams are unblocked. If the user had requested suppression of the header, then 0x1c, ‘A’, and the 0x0a would have been deleted.

For transmitting Measurement mode data, use three ASCII bytes to represent each measurement mode. For example, if Meas1 is FBB, Meas2 is LBB, the measured values are 6 and 120, and the controller ID is B, the data string is as follows:

```
0x1c 'B', '0', '0', '6', '1', '2', '0', 0x0a
```

As with ALL mode, the header and clear data could be suppressed. For clear data suppression, the control module sends the status of a clear condition only on the first clear scan. After that, the control module will continue to scan but will not transmit data until the sensor is again blocked.

8.2.2 Binary Format Data Transmission

Similar to ASCII format, binary format may be used to represent data in two ways. One method involves the All Data transmission mode; the other, Measurement mode.

For All Data transmission mode, the control module represents the status of eight consecutive data channels for each byte. Each bit of each byte is directly related to the status of an individual channel. The first data byte represents channels 1 through 8; the second data byte represents channels 9 through 16. The bit pattern for the first and second data bytes is as shown in the table.

First Data Byte		Second Data Byte	
Channel	Bit Position	Channel	Bit Position
1	7	9	7
2	6	10	6

chanhvinh.com

First Data Byte		Second Data Byte	
Channel	Bit Position	Channel	Bit Position
3	5	11	5
4	4	12	4
5	3	13	3
6	2	14	2
7	1	15	1
8	0	16	0

For each bit position, 1 represents a blocked beam and 0 represents an unblocked beam.

For example, for a 64-channel system with beams 1-6 blocked, beam 43 blocked and beams 62-64 blocked, the data transmitted from control module ‘A’ is as follows:

```
0x1c, ‘A’, 0xFC, 0x00, 0x00, 0x00, 0x00, 0x20, 0x00, 0x07, 0x0A
```

This string would have the start byte, controller ID, followed by the eight data bytes and terminated with the 0x0A. The header bytes may be suppressed if necessary.

For Measurement mode analysis, the binary format uses two data bytes for each measurement mode. (If we have one measurement mode, then there are two data bytes. For two measurement modes, there are four data bytes.)

For example, assume that control module B is configured for one measurement mode (FBB), and the value is 78. The string from the control module is as follows:

```
0x1c, ‘B’, 0x00, 0x4E, 0x0A.
```

(a total of five bytes)

or

```
0x00, 0x4E
```

(a total of two bytes with Suppress Header option)

Now assume that control module B is configured for FBB and LBB with values of 74 and 303, respectively. The string from the control module is as follows:

```
0x1c,’B’, 0x00, 0x4A, 0x01, 0x2F, 0x0A
```

(a total of seven bytes)

or

```
0x00, 0x4A, 0x01, 0x2F
```

(a total of four bytes with Suppress Header option)

8.3 Max Meas Mode Command String

Max Meas Mode causes the control module to retain the maximum measurement values for a given object. These values are transmitted either immediately after the control module is cleared or when prompted by the Host. The Max Meas Mode Command String is a four-byte string that appears as follows:

- Control byte with decimal value 248
- Controller ID (one of 15 ASCII letters A through O, as specified in the PSF)
- Max Meas Command Transmit (ASCII letter T)
- Termination byte with decimal value 13

chanhvinh.com

The command string is further defined:

```
/*the below C code will define an array called msg which will contain the Max Meas Mode Command String*/
```

```
unsigned char msg[4]; /*declare four byte unsigned character array using C language */
msg[0]=248; /*control byte */
msg[1]=65; /*assume the controller ID is the letter A */
msg[2]=84; /*assume initiation byte which is the ASCII letter T */
msg[3]=13; /*termination byte */
```

When the host sends this string, the control module sends the maximum values stored from the previous scanned object. If the sensor is presently scanning an object when the message is sent, the control module gives the maximum values for the present object.

8.4 Glossary

Blanked Beam	A beam that is ignored by the receiver, as a result of a blanking program being applied to it. Beams (or groups of beams) are blanked when a component or fixture will remain in or move through the light screen array; blanking the affected beams prevents the component or fixture from causing false outputs.
Blocked Beam	A beam that is obstructed between the emitter and the receiver, and is not blanked.
Clear Beam	A beam that runs unobstructed from the emitter to the receiver (same as a made or unblocked beam).
Excess Gain	A measurement of the amount of light falling on the receiver from the emitter over and above the minimum amount required for operation. A-GAGE High-Resolution MINI-ARRAY emitters and receivers automatically perform an Alignment procedure to equalize the amount of excess gain at each element along the array.
Host	A computer or process controller that controls and receives input from the High-Resolution MINI-ARRAY System, and/or other equipment and systems within a factory.
Made Beam	A beam that runs unobstructed from the emitter to the receiver (same as an unblocked or clear beam).
Unblocked Beam	A beam that runs unobstructed from the emitter to the receiver (same as a made or clear beam).

chanhvinh.com

9 Product Support and Maintenance

9.1 Contact Us

Banner Engineering Corp. headquarters is located at:

9714 Tenth Avenue North
Minneapolis, MN 55441, USA
Phone: + 1 888 373 6767

For worldwide locations and local representatives, visit *www.bannerengineering.com*.

9.2 Banner Engineering Corp Limited Warranty

Banner Engineering Corp. warrants its products to be free from defects in material and workmanship for one year following the date of shipment. Banner Engineering Corp. will repair or replace, free of charge, any product of its manufacture which, at the time it is returned to the factory, is found to have been defective during the warranty period. This warranty does not cover damage or liability for misuse, abuse, or the improper application or installation of the Banner product.

THIS LIMITED WARRANTY IS EXCLUSIVE AND IN LIEU OF ALL OTHER WARRANTIES WHETHER EXPRESS OR IMPLIED (INCLUDING, WITHOUT LIMITATION, ANY WARRANTY OF MERCHANTABILITY OR FITNESS FOR A PARTICULAR PURPOSE), AND WHETHER ARISING UNDER COURSE OF PERFORMANCE, COURSE OF DEALING OR TRADE USAGE.

This Warranty is exclusive and limited to repair or, at the discretion of Banner Engineering Corp., replacement. **IN NO EVENT SHALL BANNER ENGINEERING CORP. BE LIABLE TO BUYER OR ANY OTHER PERSON OR ENTITY FOR ANY EXTRA COSTS, EXPENSES, LOSSES, LOSS OF PROFITS, OR ANY INCIDENTAL, CONSEQUENTIAL OR SPECIAL DAMAGES RESULTING FROM ANY PRODUCT DEFECT OR FROM THE USE OR INABILITY TO USE THE PRODUCT, WHETHER ARISING IN CONTRACT OR WARRANTY, STATUTE, TORT, STRICT LIABILITY, NEGLIGENCE, OR OTHERWISE.**

Banner Engineering Corp. reserves the right to change, modify or improve the design of the product without assuming any obligations or liabilities relating to any product previously manufactured by Banner Engineering Corp. Any misuse, abuse, or improper application or installation of this product or use of the product for personal protection applications when the product is identified as not intended for such purposes will void the product warranty. Any modifications to this product without prior express approval by Banner Engineering Corp will void the product warranties. All specifications published in this document are subject to change; Banner reserves the right to modify product specifications or update documentation at any time. Specifications and product information in English supersede that which is provided in any other language. For the most recent version of any documentation, refer to: *www.bannerengineering.com*.

For patent information, see *www.bannerengineering.com/patents*.