chanhvinh.com

M12 MQDC-4xx Single-Ended Female Cordsets (4-pin)

Features

- M12 female to flying leads, four conductors, multiple length options
- Black PVC jacket, unshielded, A-code connector
- Straight and right-angle connector options

MQDC-4xx Models

4-Pin Single-Ended M12 Female Cordsets					
Model	**Length**	**Style**	**Dimensions**	**Pinout (Female)**	
MQDC-403	1 m (3.28 ft)	Straight	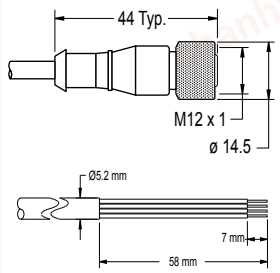	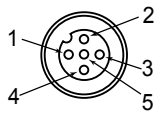	1 = Brown 2 = White 3 = Blue 4 = Black 5 = Not used
MQDC-406	2 m (6.56 ft)				
MQDC-410	3 m (9.8 ft)				
MQDC-415	5 m (16.4 ft)				
MQDC-430	9 m (29.5 ft)				
MQDC-450	15 m (49.2 ft)				
MQDC-460	18.3 m (60 ft)				
MQDC-470	21 m (68.9 ft)				
MQDC-4100	30 m (98.43 ft)				

4-Pin Single-Ended M12 Female Cordsets					
Model	**Length**	**Style**	**Dimensions**	**Pinout (Female)**	
MQDC-406RA	2 m (6.56 ft)	Right-Angle	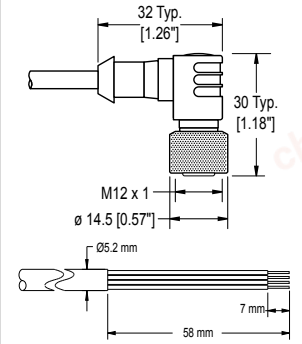	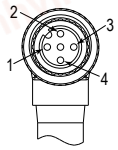	1 = Brown 2 = White 3 = Blue 4 = Black 5 = Not used
MQDC-415RA	5 m (16.4 ft)				
MQDC-430RA	9 m (29.5 ft)				
MQDC-450RA	15 m (49.2 ft)				
MQDC-460RA	18.3 m (60 ft)				
MQDC-470RA	22 m (72.1 ft)				
MQDC-4100RA	30 m (98.43 ft)				

Specifications

Current Rating
4 A

Voltage Rating
30 V DC

Installation
Static: 5× the outside diameter
Dynamic: 10× the outside diameter

AWG
22 AWG

Outer Diameter
5.21 mm

Coding
A

Construction
Coupling nut material: Nickel-plated brass
Contact carrier: Black nylon
Connector body: Black PUR
Jacket material: Black PVC

Vibration and Mechanical Shock
Meets IEC 60068-2-6 requirements (Vibration: 10 Hz to 55 Hz, 1.0 mm amplitude, 5 minutes sweep, 30 minutes dwell)
Meets IEC 60068-2-27 requirements (Shock: 30G 11 ms duration, half sine wave)

Connections
Integral 4-pin M12 female quick disconnect

Operating Conditions
Operating temperature: –40 °C to +60 °C (–40 °F to +140 °F)
Storage temperature: –40 °C to +70 °C (–40 °F to +158 °F)
90% at +50 °C maximum relative humidity (non-condensing)

Original Instructions
30-Oct-24

© Banner Engineering Corp. All rights reserved.

223455
p/n: 223455 Rev. C

chanhvinh.com

Environmental Rating

IP67, IP68
UL Type 1

Certifications

Banner Engineering BV
Park Lane, Culliganlaan 2F bus 3
1831 Diegem, BELGIUM

Turck Banner LTD Blenheim House
Blenheim Court
Wickford, Essex SS11 8YT
GREAT BRITAIN

4A passthrough 45°C Ambient; 2A passthrough 55°C Ambient; 1A passthrough 60°C Ambient
UL Listing: NKCR.E71083 UL 60947-5-1

Banner Engineering Corp Limited Warranty

Banner Engineering Corp. warrants its products to be free from defects in material and workmanship for one year following the date of shipment. Banner Engineering Corp. will repair or replace, free of charge, any product of its manufacture which, at the time it is returned to the factory, is found to have been defective during the warranty period. This warranty does not cover damage or liability for misuse, abuse, or the improper application or installation of the Banner product.

THIS LIMITED WARRANTY IS EXCLUSIVE AND IN LIEU OF ALL OTHER WARRANTIES WHETHER EXPRESS OR IMPLIED (INCLUDING, WITHOUT LIMITATION, ANY WARRANTY OF MERCHANTABILITY OR FITNESS FOR A PARTICULAR PURPOSE), AND WHETHER ARISING UNDER COURSE OF PERFORMANCE, COURSE OF DEALING OR TRADE USAGE.

This Warranty is exclusive and limited to repair or, at the discretion of Banner Engineering Corp., replacement. **IN NO EVENT SHALL BANNER ENGINEERING CORP. BE LIABLE TO BUYER OR ANY OTHER PERSON OR ENTITY FOR ANY EXTRA COSTS, EXPENSES, LOSSES, LOSS OF PROFITS, OR ANY INCIDENTAL, CONSEQUENTIAL OR SPECIAL DAMAGES RESULTING FROM ANY PRODUCT DEFECT OR FROM THE USE OR INABILITY TO USE THE PRODUCT, WHETHER ARISING IN CONTRACT OR WARRANTY, STATUTE, TORT, STRICT LIABILITY, NEGLIGENCE, OR OTHERWISE.**

Banner Engineering Corp. reserves the right to change, modify or improve the design of the product without assuming any obligations or liabilities relating to any product previously manufactured by Banner Engineering Corp. Any misuse, abuse, or improper application or installation of this product or use of the product for personal protection applications when the product is identified as not intended for such purposes will void the product warranty. Any modifications to this product without prior express approval by Banner Engineering Corp will void the product warranties. All specifications published in this document are subject to change; Banner reserves the right to modify product specifications or update documentation at any time. Specifications and product information in English supersede that which is provided in any other language. For the most recent version of any documentation, refer to: www.bannerengineering.com.

For patent information, see www.bannerengineering.com/patents.

© Banner Engineering Corp. All rights reserved.