chanhvinh.com

SW-5000-1805

5000 series

Miniature toggle switches •
threaded bushing Ø 6.35 mm or plain bushing



DISTINCTIVE FEATURES

17 actuators including toggles, paddle levers and locking levers in different lengths.

Various contact materials for low and high currents.

8 functions including maintained and momentary versions.

1 to 4 pole configurations.

12 terminal types including 9 for PC board mounting.
Other types include quick-connect and wire-wrap.

Several bushing styles.

3 types of finish including military black.

3 approvals (UL - CSA - CECC).

4 types of sealing for terminal or front panel requirements.

Numerous accessories available.



The company reserves the right to change specifications without notice.

chanhvinh.com

5000 series

Miniature toggle switches •
threaded bushing Ø 6.35 mm or plain bushing

ELECTRICAL SPECIFICATIONS

- Current/voltage rating with resistive load :

Contact	Maximum	Minimum	Level*
Silver (A)	4 A 30 VDC	50 mA 10 VDC	III and IV
Silver, gold plated (AD)	4 A 30 VDC Gold plating withstands up to 100 mA 30 VDC	10 mA 50 mV 10 µA 5 V	I to IV
Brass, gold plated (CD)	0.4 VA at 20 VAC or DC	10 mA 50 mV 10 µA 5 V	I and II

*For details, see Technical Information on website.

- For inductive, lamp or capacitive load, consult factory.
- Initial contact resistance : 10 mΩ max.
- Insulation resistance : 1,000 MΩ min. at 500 VDC
- Dielectric strength :
  1,000 Vrms 50 Hz min. between terminals
  1,500 Vrms 50 Hz min. between poles
  1,500 Vrms 50 Hz min. between terminals and frame
- Contact bounce : 2 ms max.
- Electrical life at full load :
  50,000 cycles for single and double pole
  40,000 cycles for 3 pole
  30,000 cycles for 4 pole
- Low level or mechanical life : 100,000 cycles

GENERAL SPECIFICATIONS

- Torque : 1.25 Nm (.922 Ft.lb) max. applied to nut
- Panel thickness : 2.5 mm (.098) with 2 nuts - 4 mm (.157) with 1 nut
- Operating temperature : -40 °C to +85 °C (-40 °F to +185 °F)

AGENCY APPROVALS

CECC 96201-007

3 A 250 VAC, 6 A 125 VAC

For **VDE**, refer to 55000 series.

NATO

Availability : consult factory for details of approved models.

Marking : to order switches marked UL, CSA or CECC, complete appropriate box of ordering format. The preferential list does not appear on the switches.

MATERIALS

- Case : diallylphthalate (DAP) or high temperature plastic material (UL94-V0)
- Actuator : brass, nickel plated
- Paddles : UL94HB polyamide
- Lever caps : vinyl
- Bushing : brass, nickel plated
- Housing : stainless steel or steel tin plated
- Contacts
  A : silver
  AD : silver, gold plated
  CD : brass, gold plated
  X814 : for peak currrents, see "Special options".
- Terminal seal : epoxy

APEM products may be recycled at end-of-life for the re-claiming of valuable metal components.

5000 series

Miniature toggle switches •
threaded bushing Ø 6.35 mm or plain bushing

TERMINALS

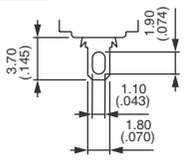

Solder lugs

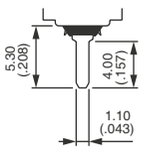

Straight PC

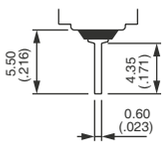

Straight PC

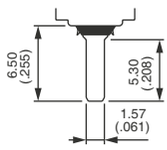

Quick-connect

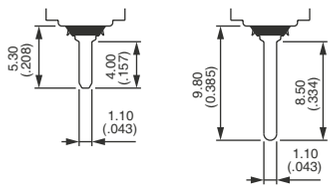

Straight PC bracket mounting

ELECTRICAL FUNCTION

→ KEYWAY

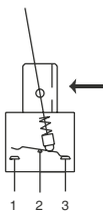

PANEL CUT-OUT

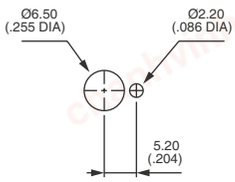

Standard

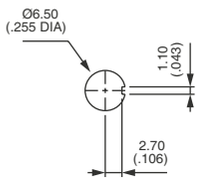

With **K** sealing option

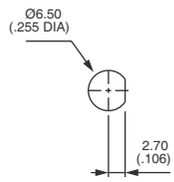

With **X408** sealing option

PCB MOUNTING FOR RIGHT ANGLE TERMINAL MODELS

HORIZONTAL W

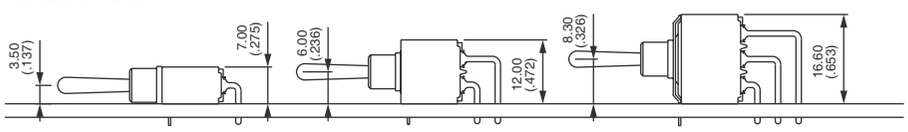

SP DP 3P

VERTICAL WW

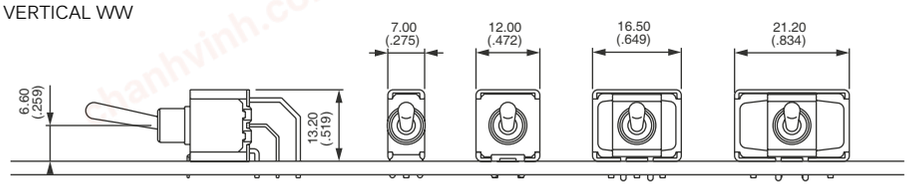

SP DP 3P 4P

chanhvinh.com

5000 series

Miniature toggle switches •
threaded bushing Ø 6.35 mm or plain bushing

BUILD YOUR PART NUMBER

BASIC PART NUMBER

5 ___ ___ ___ ___ ___ ___

SERIES

5

NUMBER OF POLES

3	Single pole
4	Double pole
5	Three pole
6	Four pole

TERMINALS

Blank	Solder lugs or straight PC depending on model
W	Right angle, horizontal mounting (5200 - 5400 switches)
WW	Right angle, vertical mounting (5200 - 5400 switches)
Y•	Bracket mounting (5200 switches)
Z	Quick-connect (5200 - 5900 switches)

MOMENTARY FOR FUNCTION 4

1R	ON ON MOM
2R	MOM ON MOM

TERMINALS AND BUSHINGS

0	Straight PC terminals, 5.08 (.200) terminal spacing
2	Straight PC terminals, 4.70 (.185) terminal spacing, right angle or quick-connect
4	Straight PC terminals, 4 (.157) terminal spacing or right angle terminals
6	Solder lug terminals
7	Solder lug terminals, with **flatted** bushing
9	Straight PC or quick-connect terminals, with **flatted** bushing, 4.70 (.185) terminal spacing

Bushing Ø 6 (.236) x 0.75 IS also available as standard.

ELECTRICAL FUNCTIONS

6	ON	-	ON
9	ON	OFF	ON
7	MOM	OFF	MOM
8	ON	OFF	MOM
2	ON	-	MOM
4	ON	ON	ON
	ON	ON	MOM ▲
	MOM	ON	MOM ▲

Function 4
Must not have blank in «connections» box.
▲ Must not have blank in «momentary» box.

CONNECTIONS FOR FUNCTION 4

TH	Standard
CT	Reversed

For functions 4, 4-1R, 4-2R (leave blank for all other functions).
Wiring diagrams, see Technical information on website.

5000 series

Miniature toggle switches • threaded bushing Ø 6.35 mm or plain bushing

OPTIONS

CONTACT MATERIALS

A	Silver
AD	Silver, gold plated
CD	Brass, gold plated

For peak currents, see X814, under Special Options.

FINISH

Blank	Nickel plated
G	Black finish on bushing, actuator and hardware.

SEALING

Blank	No sealing except where standard
K	Front panel sealing by one O-ring and sealing washer
B	Epoxy sealed terminals

Sealing by two O-rings, see X408 under «Special options».

FLUORESCENT TIP

Blank	None
-038	White fluorescent tip to lever

Available with black finish (G) only.

LEVERS

Length with	threaded bushing	plain bushing
Blank (std)	10.5 (.413)	13.5 (.531)
-9 (flat)	11.4 (.448)	-
-16	5.5 (.216)	8.5 (.334)
-4N	9 (.354)	12 (.472)

4N for use with paddle actuators only.

LOCKING LEVERS

-1V	1 locked position
-2V	2 locked positions
-3V	3 locked positions

Other levers and locking levers, see following pages.

SPECIAL OPTIONS

X408	Front panel sealing by two O-rings

Other : see following pages.

AGENCY APPROVALS

UL, CSA, CECC	For VDE, refer to 55000 series.

CAPS

Caps	Length
U270	11 (.433)
U1710	7.3 (.287)

PADDLES FOR 4N (ORDER SEPARATELY)

U240N	12.6 (.496)
U290N	20.00 (.787)
U390N	21.4 (.842)

ABOUT THIS SERIES

On the following pages, you will find successively basic part numbers of switches and options in the same order as in above chart.

Notice : please note that not all combinations of above numbers are available. Refer to the following pages for further information.

Sealing boots are available. See "Sealing Boots" section of website.

Mounting accessories : standard hardware supplied with all models with Ø 6.35 (1/4) or Ø 6 (.236) threaded bushing : 2 hex nuts 8 mm (.314) across flats, 1 locking ring and 1 lockwasher. Standard and special hardware is presented in the “Hardware“ section of website.

chanhvinh.com

5000 series

Miniature toggle switches • threaded bushing Ø 6.35 mm

SOLDER LUG TERMINALS SINGLE POLE



	III 2-3	II	I 1-2
5636	ON	-	ON
5639	ON	OFF	ON
5637	MOM	OFF	MOM
5638	ON	OFF	MOM
5632	ON	-	MOM

SOLDER LUG TERMINALS DOUBLE POLE



	III 2-3 5-6	II	I 1-2 4-5
5646	ON	-	ON
5649	ON	OFF	ON
5647	MOM	OFF	MOM
5648	ON	OFF	MOM
5642	ON	-	MOM
5644*	ON	ON	ON
5644 1R*	ON	ON	MOM
5644 2R*	MOM	ON	MOM

SOLDER LUG TERMINALS THREE POLE



	III 2-3 5-6 8-9	II	I 1-2 4-5 7-8
5656	ON	-	ON
5659	ON	OFF	ON
5657	MOM	OFF	MOM
5658	ON	OFF	MOM
5652	ON	-	MOM

SOLDER LUG TERMINALS FOUR POLE



	III 2-3 5-6 8-9 11-12	II	I 1-2 4-5 7-8 10-11
5666	ON	-	ON
5669	ON	OFF	ON
5667	MOM	OFF	MOM
5668	ON	OFF	MOM
5662	ON	-	MOM
5664*	ON	ON	ON
5664 1R*	ON	ON	MOM
5664 2R*	MOM	ON	MOM

All models above also available with flatted bushing : **5700** or with dia. 6 mm x 0.75 SI (.236 x 0.75 IS) : **5500**.

Shown with standard lever

→ KEYWAY

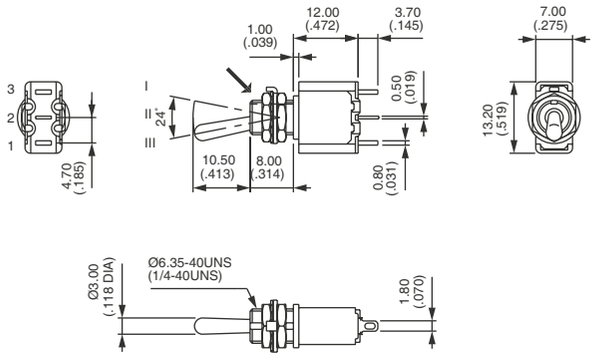

→ KEYWAY

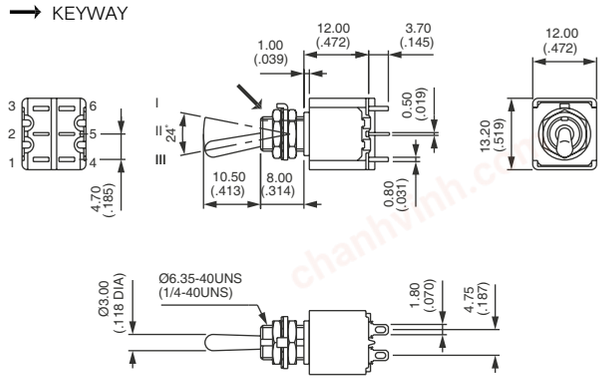

* Function 4 : SP in DP case - specify CT or TH connections.

→ KEYWAY

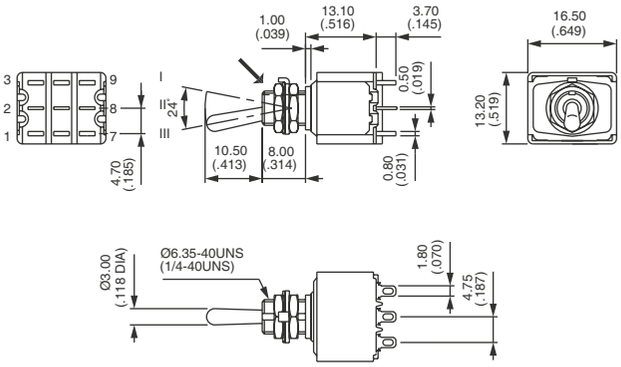

→ KEYWAY

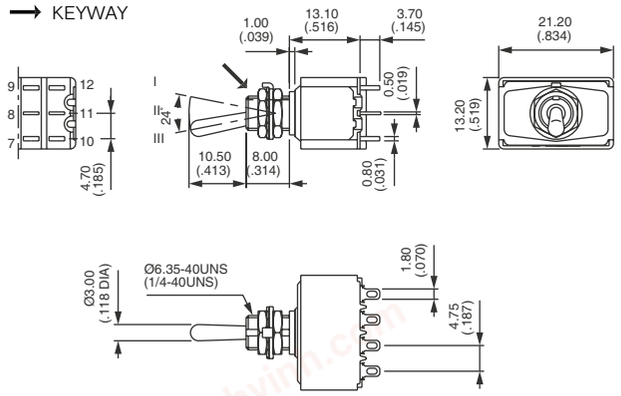

* Function 4 : DP in 4P case - specify CT or TH connections.

5000 series

Miniature toggle switches • threaded bushing Ø 6.35 mm or plain bushing

STRAIGHT PC TERMINALS - SPACING 4.7 (.185) SINGLE POLE



	III 2-3	II	I 1-2
5236 B	ON	-	ON
5239 B	ON	OFF	ON
5237 B	MOM	OFF	MOM
5238 B	ON	OFF	MOM
5232 B	ON	-	MOM

Shown with standard lever

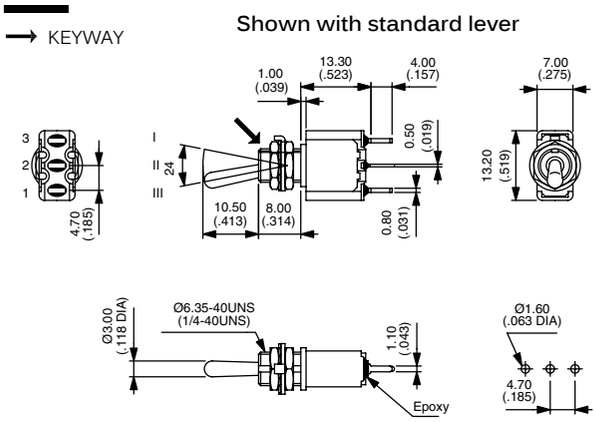

STRAIGHT PC TERMINALS - SPACING 4.7 (.185) DOUBLE POLE



	III 2-3 5-6	II	I 1-2 4-5
5246 B	ON	-	ON
5249 B	ON	OFF	ON
5247 B	MOM	OFF	MOM
5248 B	ON	OFF	MOM
5242 B	ON	-	MOM
5244 B*	ON	ON	ON
5244 1R B*	ON	ON	MOM
5244 2R B*	MOM	ON	MOM

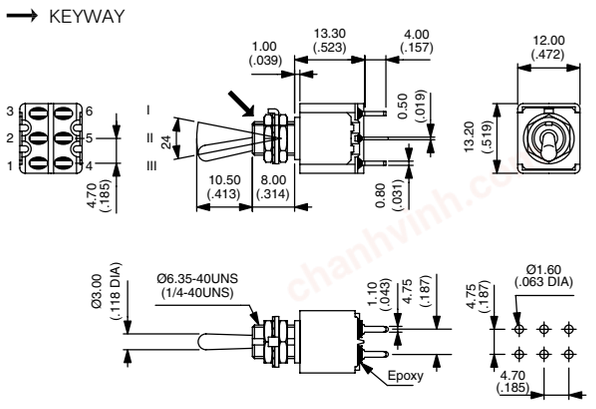

* Function 4 : SP in DP case - specify CT or TH connections.

STRAIGHT PC TERMINALS - SPACING 4.7 (.185) THREE POLE



	III 2-3 5-6 8-9	II	I 1-2 4-5 7-8
5256 B	ON	-	ON
5259 B	ON	OFF	ON
5257 B	MOM	OFF	MOM
5258 B	ON	OFF	MOM
5252 B	ON	-	MOM

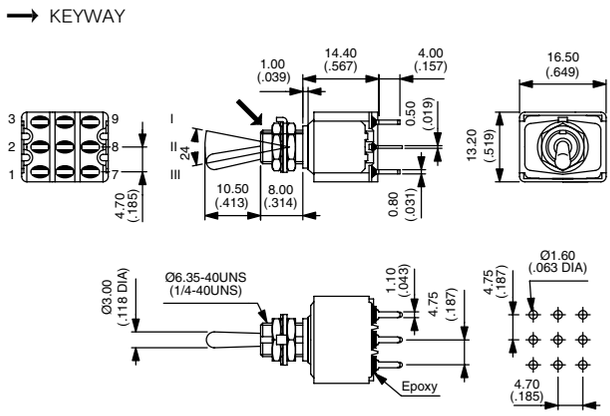

STRAIGHT PC TERMINALS - SPACING 4.7 (.185) FOUR POLE



	III 2-3 5-6 8-9 11-12	II	I 1-2 4-5 7-8 10-11
5266 B	ON	-	ON
5269 B	ON	OFF	ON
5267 B	MOM	OFF	MOM
5268 B	ON	OFF	MOM
5262 B	ON	-	MOM
5264 B*	ON	ON	ON
5264 1R B*	ON	ON	MOM
5264 2R B*	MOM	ON	MOM

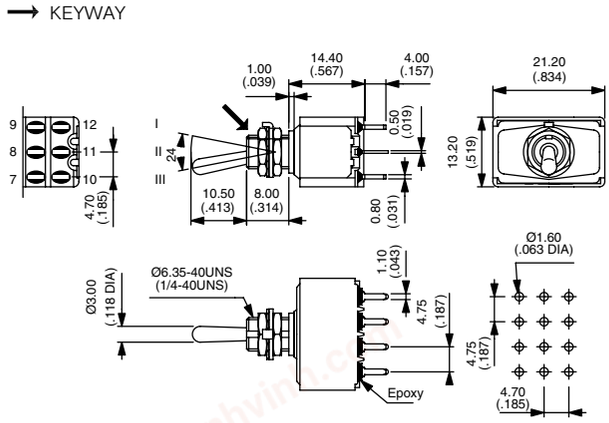

* Function 4 : SP in DP case - specify CT or TH connections.

All models above : Epoxy sealed terminals standard (B).
All models above also available with flatted bushing : **5900** or with terminal spacing 4 mm (.157) : **5400**.

chanhvinh.com

5000 series

Miniature toggle switches •
threaded bushing Ø 6.35 mm or plain bushing

STRAIGHT PC TERMINALS SPACING 5.08 (.200)



Single pole	Double pole	III 2-3 5-6	II	I 1-2 4-5
5036 B	5046 B	ON	-	ON
5039 B	5049 B	ON	OFF	ON
5037 B	5047 B	MOM	OFF	MOM
5038 B	5048 B	ON	OFF	MOM
5032 B	5042 B	ON	-	MOM
	5044* B	ON	ON	ON
	5044 1R* B	ON	ON	MOM
	5044 2R* B	MOM	ON	MOM

Epoxy sealed terminals standard (B).

→ KEYWAY

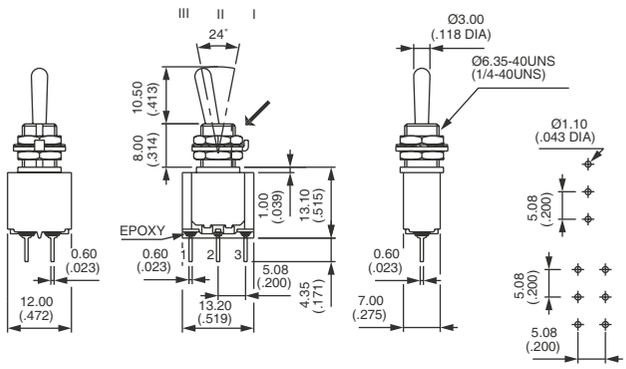

* Function 4 : SP in DP case - specify CT or TH connections.

QUICK-CONNECT TERMINALS SINGLE POLE



	III 2-3	II	I 1-2
5236Z B	ON	-	ON
5239Z B	ON	OFF	ON
5237Z B	MOM	OFF	MOM
5238Z B	ON	OFF	MOM
5232Z B	ON	-	MOM

Single and double pole models also available with flatted bushing : **5900Z**.
Epoxy sealed terminals standard (B).

→ KEYWAY

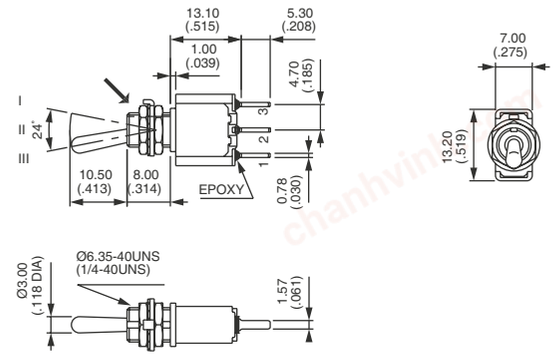

QUICK-CONNECT TERMINALS DOUBLE POLE



	III 2-3 5-6	II	I 1-2 4-5
5246Z B	ON	-	ON
5249Z B	ON	OFF	ON
5247Z B	MOM	OFF	MOM
5248Z B	ON	OFF	MOM
5242Z B	ON	-	MOM
5244Z* B	ON	ON	ON
5244Z 1R* B	ON	ON	MOM
5244Z 2R* B	MOM	ON	MOM

Epoxy sealed terminals standard (B).

→ KEYWAY

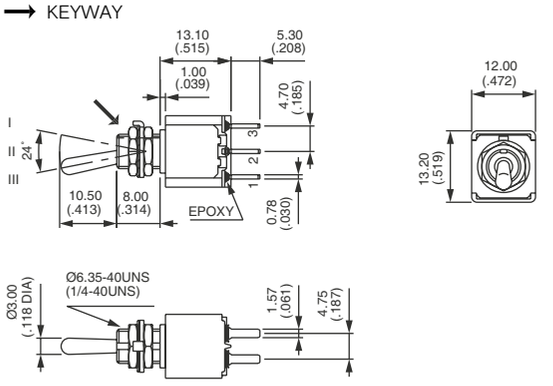

* Function 4 : SP in DP case - specify CT or TH connections.

RIGHT ANGLE TERMINALS - HORIZONTAL SINGLE POLE



	III 2-3	II	I 1-2
5236W	ON	-	ON
5239W	ON	OFF	ON
5237W	MOM	OFF	MOM
5238W	ON	OFF	MOM
5232W	ON	-	MOM

Also available with terminal spacing 4 mm (.157) instead of 4.7 (.185) : **5400W**.

→ KEYWAY

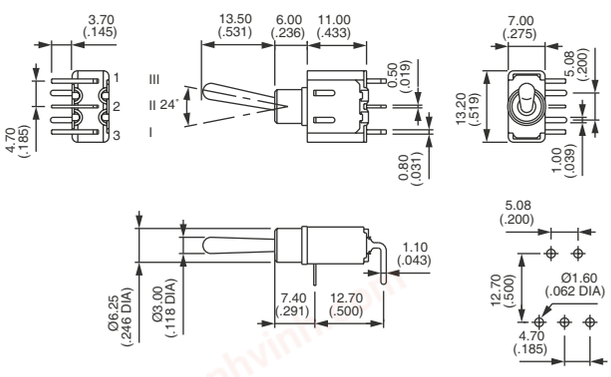

5000 series

Miniature toggle switches • plain bushing

RIGHT ANGLE TERMINALS - HORIZONTAL DOUBLE POLE



	III 2-3 5-6	II	I 1-2 4-5
5246W	ON	-	ON
5249W	ON	OFF	ON
5247W	MOM	OFF	MOM
5248W	ON	OFF	MOM
5242W	ON	-	MOM
5244W*	ON	ON	ON
5244W 1R*	ON	ON	MOM
5244W 2R*	MOM	ON	MOM

Also available with terminal spacing 4 mm (.157) instead of 4.7 (.185) : **5400W**.

Shown with standard lever

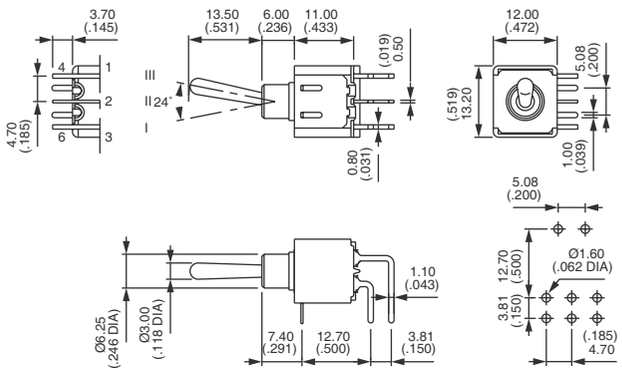

* Function 4 : SP in DP case - specify CT or TH connections.

RIGHT ANGLE TERMINALS - HORIZONTAL THREE POLE



	III 2-3 5-6 8-9	II	I 1-2 4-5 7-8
5256W	ON	-	ON
5259W	ON	OFF	ON
5257W	MOM	OFF	MOM
5258W	ON	OFF	MOM
5252W	ON	-	MOM

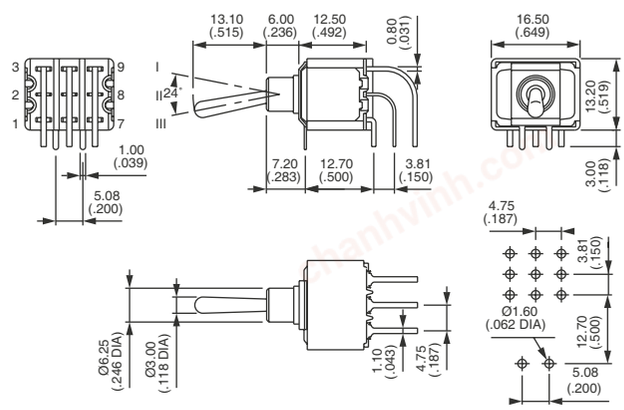

RIGHT ANGLE TERMINALS - VERTICAL SINGLE POLE



	III 2-3	II	I 1-2
5236WW	ON	-	ON
5239WW	ON	OFF	ON
5237WW	MOM	OFF	MOM
5238WW**	ON	OFF	MOM
5232WW**	ON	-	MOM

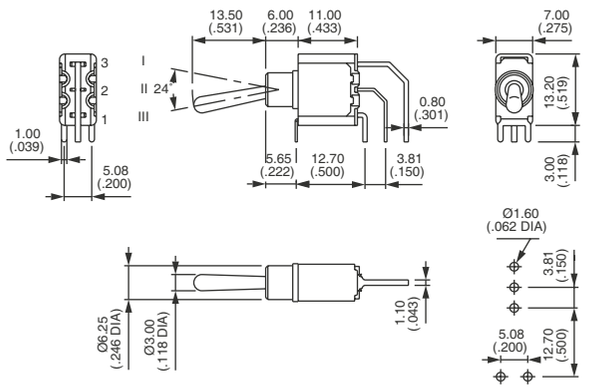

RIGHT ANGLE TERMINALS - VERTICAL DOUBLE POLE



	III 2-3 5-6	II	I 1-2 4-5
5246WW	ON	-	ON
5249WW	ON	OFF	ON
5247WW	MOM	OFF	MOM
5248WW**	ON	OFF	MOM
5242WW**	ON	-	MOM
5244WW*	ON	ON	ON
5244WW 1R*	ON	ON	MOM
5244WW 2R*	MOM	ON	MOM

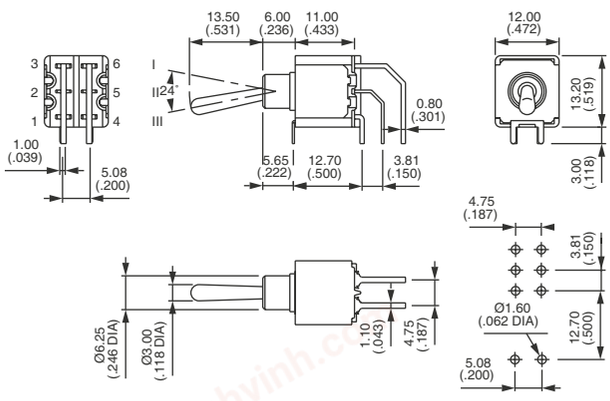

Vertical right angle models above : * Function 4 : SP in DP case, DP in 4P case - specify CT or TH connections.
** Functions 2 and 8 : reversed connection available, consult factory.
Also available with pin spacing 2.54 mm (.100) instead of 3.81 mm (.150) : **5400WW**

5000 series

Miniature toggle switches • plain bushing

RIGHT ANGLE TERMINALS - VERTICAL THREE POLE



	III 2-3 5-6 8-9	II	I 1-2 4-5 7-8
5256WW	ON	-	ON
5259WW	ON	OFF	ON
5257WW	MOM	OFF	MOM
5258WW**	ON	OFF	MOM
5252WW**	ON	-	MOM

** Functions 2 and 8 : reversed connection available, consult factory.

RIGHT ANGLE TERMINALS - VERTICAL FOUR POLE



	III 2-3 5-6 8-9 11-12	II	I 1-2 4-5 7-8 10-11
5266WW	ON	-	ON
5269WW	ON	OFF	ON
5267WW	MOM	OFF	MOM
5268WW**	ON	OFF	MOM
5262WW**	ON	-	MOM
5264WW*	ON	ON	ON
5264WW 1R*	ON	ON	MOM
5264WW 2R*	MOM	ON	MOM

Vertical right angle models above also available with terminal spacing 2.54 mm (.100) instead of 3.81 mm (.150) : **5400WW**.

SHORT BRACKET - WIDTH 15.75 (.620) SINGLE POLE



	III 2-3	II	I 1-2
5236Y B	ON	-	ON
5239Y B	ON	OFF	ON
5237Y B	MOM	OFF	MOM
5238Y B	ON	OFF	MOM
5232Y B	ON	-	MOM

Epoxy sealed terminals standard (B).

SHORT BRACKET - WIDTH 15.75 (.620) DOUBLE POLE



	III 2-3 5-6	II	I 1-2 4-5
5246Y B	ON	-	ON
5249Y B	ON	OFF	ON
5247Y B	MOM	OFF	MOM
5248Y B	ON	OFF	MOM
5242Y B	ON	-	MOM
5244Y B*	ON	ON	ON
5244Y 1R B*	ON	ON	MOM
5244Y 2R B*	MOM	ON	MOM

Epoxy sealed terminals standard (B).

Shown with standard lever

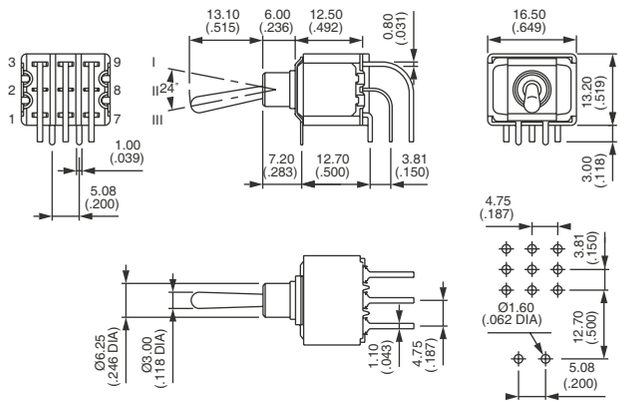

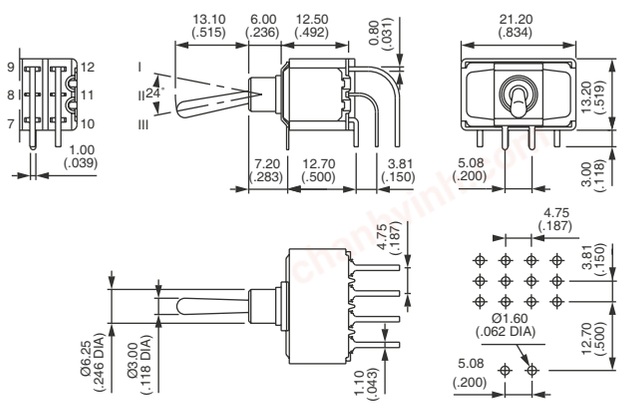

* Function 4 : SP in DP case, DP in 4P case - specify CT or TH connections.

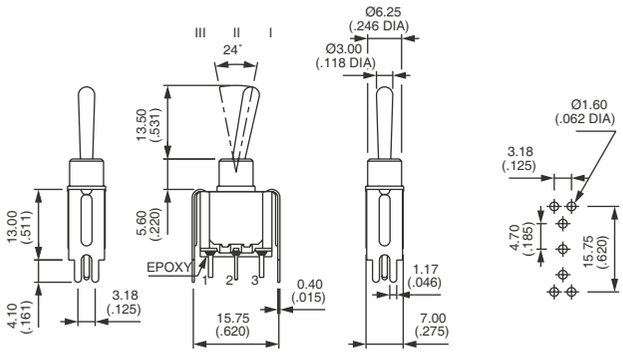

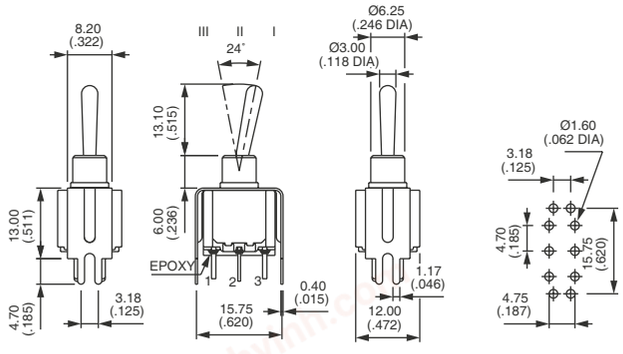

*Function 4 : SP in DP case - specify CT or TH connections.

chanhvinh.com

5000 series

Miniature toggle switches • plain bushing

TALL BRACKET - WIDTH 15.75 (.620)



Single pole	Double pole	III 2-3 5-6	II	I 1-2 4-5
5236Y4 B	5246Y4 B	ON	-	ON
5239Y4 B	5249Y4 B	ON	OFF	ON
5237Y4 B	5247Y4 B	MOM	OFF	MOM
5238Y4 B	5248Y4 B	ON	OFF	MOM
5232Y4 B	5242Y4 B	ON	-	MOM
	5244Y4 B*	ON	ON	ON
	5244Y4 1R B*	ON	ON	MOM
	5244Y4 2R B*	MOM	ON	MOM

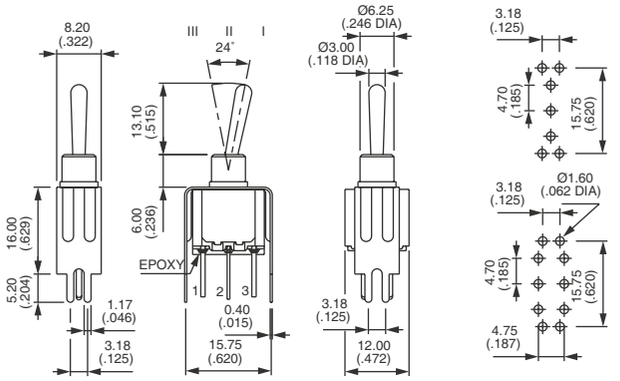

SHORT BRACKET - WIDTH 19.05 (.750)



Single pole	Double pole	III 2-3 5-6	II	I 1-2 4-5
5236Y6 B	5246Y6 B	ON	-	ON
5239Y6 B	5249Y6 B	ON	OFF	ON
5237Y6 B	5247Y6 B	MOM	OFF	MOM
5238Y6 B	5248Y6 B	ON	OFF	MOM
5232Y6 B	5242Y6 B	ON	-	MOM
	5244Y6 B*	ON	ON	ON
	5244Y6 1R B*	ON	ON	MOM
	5244Y6 2R B*	MOM	ON	MOM

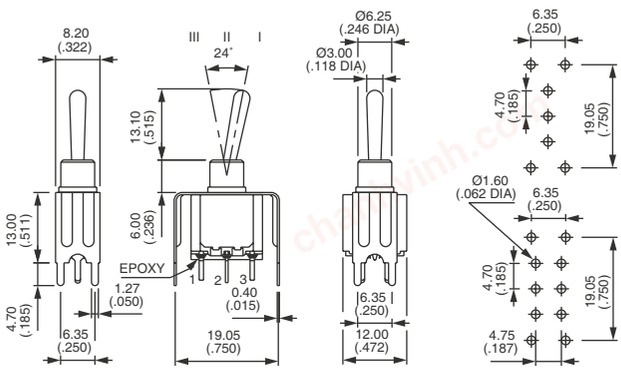

TALL BRACKET - WIDTH 19.05 (.750)



Single pole	Double pole	III 2-3 5-6	II	I 1-2 4-5
5236Y7 B	5246Y7 B	ON	-	ON
5239Y7 B	5249Y7 B	ON	OFF	ON
5237Y7 B	5247Y7 B	MOM	OFF	MOM
5238Y7 B	5248Y7 B	ON	OFF	MOM
5232Y7 B	5242Y7 B	ON	-	MOM
	5244Y7 B*	ON	ON	ON
	5244Y7 1R B*	ON	ON	MOM
	5244Y7 2R B*	MOM	ON	MOM

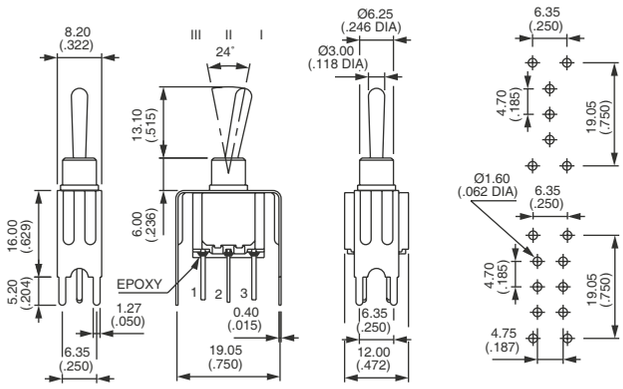

Epoxy sealed terminals standard (B).
* Function 4 : SP in DP case - specify CT or TH connections.

chanhvinh.com

5000 series

Miniature toggle switches • threaded bushing Ø 6.35 mm or plain bushing

CONTACT MATERIALS

BASIC P/N

A	Silver
AD	Silver, gold plated
CD	Brass, gold plated

Special contacts for peak currents : see X814, under “Special Options”.

FINISH

BASIC P/N

Blank	Nickel plated
G	Black finish on bushing, actuator and hardware

SEALING

BASIC P/N

Blank
- For 5000 and 5200Z models : epoxy sealed terminals standard
- Other models : no sealing required

K Front panel sealing by one O-ring and sealing washer. Protects the switch against water and dust. Panel seal withstands 1 bar pressure and remains sealed even when switch is operated.
ⓘ Available on models with Ø 6.35 (1/4) **threaded bushing only.**
Not available with levers 8, 9, 12, 22, 23.

B Epoxy sealed terminals

KB Combined sealings

Sealing by two O-rings, see X408 under "Special options".

OPTION B

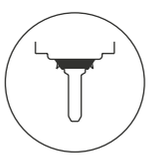

OPTION K

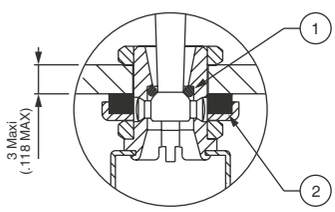

① O-ring

② Sealing washer



K with Ø 6.35 (1/4) keyway bushing includes washer **U360**



K with Ø 6.35 (1/4) flatted bushing includes washer **U5141**

FLUORESCENT TIP

BASIC P/N

Blank	None
-038	White fluorescent tip. Becomes luminous when submitted to ultraviolet rays.

ⓘ Available with black finish (option G) only.
Consult factory for levers available with this option.

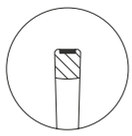

-19
Strandard lever

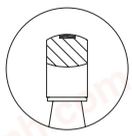

Locking lever

Same dimensions as standard actuator on next page.

chanhvinh.com

5000 series

Miniature toggle switches • threaded bushing Ø 6.35 mm or plain bushing

ACTUATORS

BASIC P/N

Dash compulsory before lever code.

LEVERS FOR THREADED BUSHING MODELS Ø 6,35 (1/4) OR Ø 6 (.236)

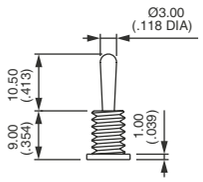

Blank
Standard

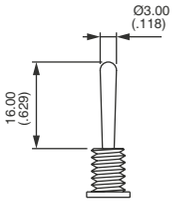

-2

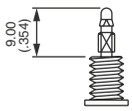

-4N *

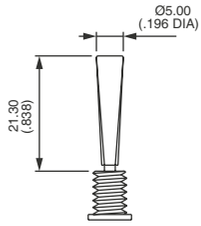

-8 **

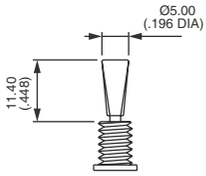

-9 **

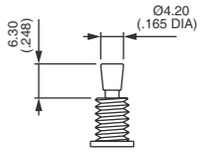

-12 **

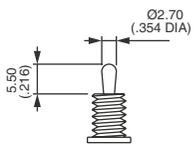

-16

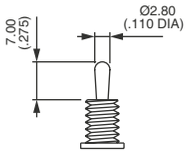

-17

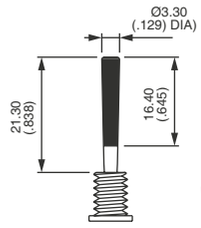

-21 (+U640) ***

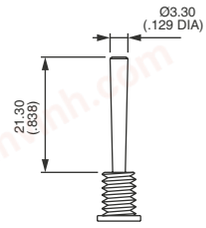

-22 **

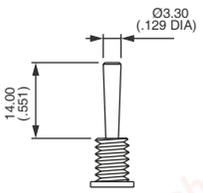

-23 **

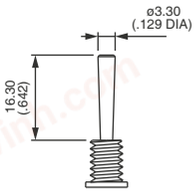

-25 **

* For use with paddles only
** Not available with sealing options K or X408
*** U640 to be placed in last box of ordering format.
Replace "**0**" by color code (see following pages)

LOCKING LEVERS FOR THREADED BUSHING MODELS Ø 6,35 (1/4)

-1V 1 locked position (function 6)
-2V 2 locked position (function 6)
-3V 3 locked positions (functions 9 and 4)

→ KEYWAY

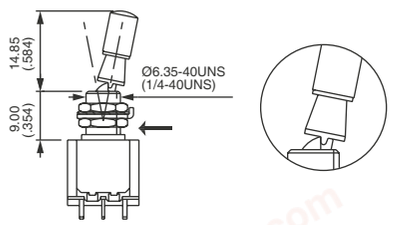

-1V

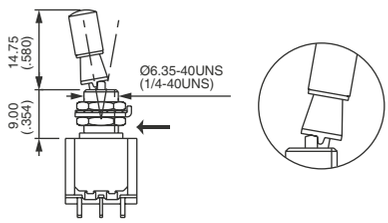

-2V

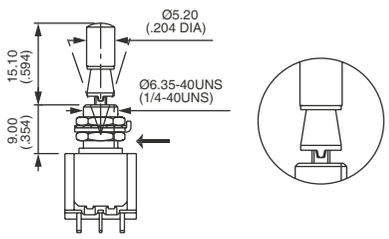

-3V

Consult factory for other locking lever options.
For plain bushing models, see X386 or X916 under “Special options” on the following pages.

chanhvinh.com

5000 series

Miniature toggle switches • threaded bushing Ø 6.35 mm or plain bushing

ACTUATORS
(CONTINUED)

BASIC P/N

LEVERS FOR PLAIN BUSHING MODELS : W - WW AND Y

Lever length : With bracket or mounting plate lever length will be reduced by 0.4 mm (.015) as a rule. Please refer to switch technical drawings of basic models pages for details.

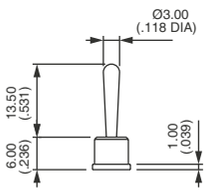

Blank
Standard

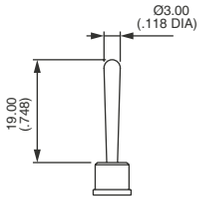

-2

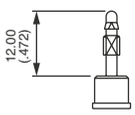

-4N

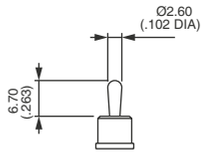

-7

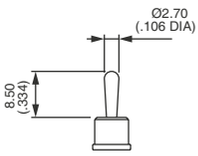

-16

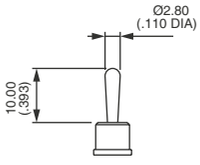

-17

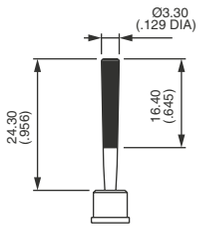

-21 (+U640) *

* U640 to be placed in last box of ordering format.
For actuator colors, replace «**0**» by color code (see following pages)

SPECIAL OPTIONS

BASIC P/N

Blank No special requirement

X408 Front panel sealing by two O-rings. Flatted bushing for precise orientation. Protects the switch against water and dust. Panel seal withstands 1 bar pressure and remains sealed even when switch is operated. Includes sealed terminals (option B).
(!) Available only on models with threaded bushing. Not available with levers 8, 9, 12, 22, 23.

X371 Plain bushing Ø 6.25 mm (.246) (instead of standard threaded bushing).

X372 Threaded bushing Ø 6.35 (1/4). **Height 7 mm (.274).**

X386 Threaded bushing Ø 6.35 mm (1/4) to replace plain bushing on models W - WW and Y.

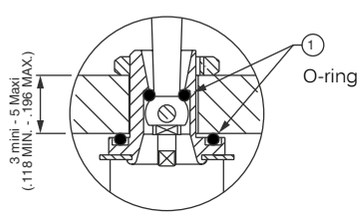

X408

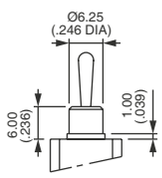

X371

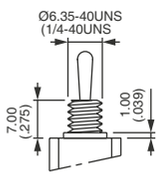

X372

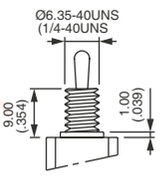

X386

5000 series

Miniature toggle switches • threaded bushing Ø 6.35 mm or plain bushing

SPECIAL OPTIONS
(CONTINUED)

BASIC P/N

X442 Threaded bushing Ø 6.35 mm (1/4) - **Height 9.9 mm (.389)**.

X445 Plain bushing. **Height 7.2 mm (.283)** - for W, WW and Y models.
Available with the same levers, insulating cap and paddles as X404.`

X601 **Silver plated brass contacts.**
Current/voltage rating for an electrical life of 20,000 cycles : 0.5 A 30 VDC. Minimum quantity : 5,000 pieces per model and shipment.

X681 **Satin chrome** actuator

X814 **Switches for peak currents** - single and double pole.
On request.

X902 Plain bushing Ø 6.25 mm (.246) - **Height 9 mm (.354)** (not available with K sealing option).

X916 Locking lever on model with plain bushing.

X404 **Horizontal right angle (W) with reduced overall dimensions** (shown with lever -16)

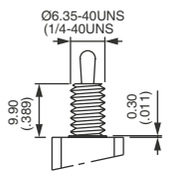

X442

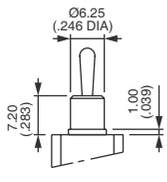

X445

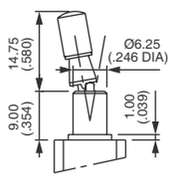

X916

ⓘ With options X372, X386, X442 and X445, the lever lengths indicated on previous pages will be modified.

OPTION X404

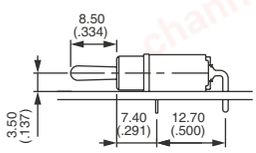

Standard **W**

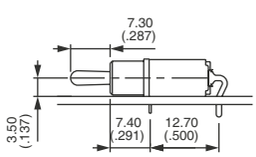

Option **X404**



Single pole	Double pole	III 2-3 5-6	II	I 1-2 4-5
5236W X404	5246W X404	ON	-	ON
5239W X404	5249W X404	ON	OFF	ON
5237W X404	5247W X404	MOM	OFF	MOM
5238W X404	5248W X404	ON	OFF	MOM
5232W X404	5242W X404	ON	-	MOM
	5244W X404*	ON	ON	ON
	5244W 1R X404*	ON	ON	MOM
	5244W 2R X404*	MOM	ON	MOM

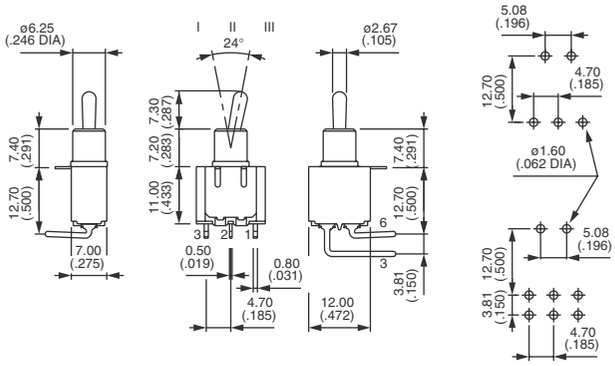

* Function 4 : SP in DP case - specify CT or TH connections

5000 series

Miniature toggle switches • threaded bushing Ø 6.35 mm or plain bushing

SPECIAL OPTIONS
(CONTINUED)

BASIC P/N

OPTION X404 (CONTINUED)
LEVERS LENGHTS FOR X404 (ALSO AVAILABLE WITH X445 OPTION)

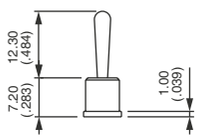

-13

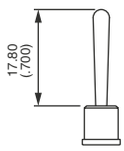

-2

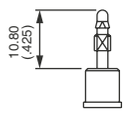

-4N *

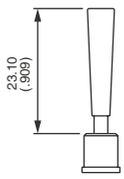

-8 **

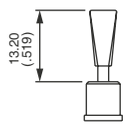

-9 **

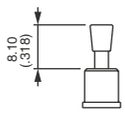

-12 **

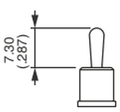

-16

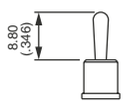

-17

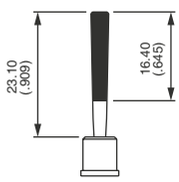

-21 (+U640) ***

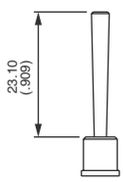

-22

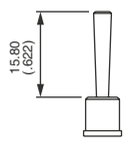

-23

* For paddles
** Levers -8, -9 and -12 not available with function 2 (ON-MOM)
*** U640 to be placed in last box of ordering format. Replace "0" with color code.

Insulating caps and paddles for X404 :
Insulating cap U1710 available with lever style 16.
Paddles U240N, U290N and U390N available with lever style 4N. See details on next page..

AGENCY APPROVALS

BASIC P/N

Blank	No agency approval required.
UL	All standard models
CSA	
CECC	Standard models 5600 - 5200

Availability : consult factory for details of approved combinations or options.

Marking : to order switches marked UL, CSA or CECC, complete above box with desired approvals, in this order & without space (ex. : ULCSACECC). **VDE (with UL & CSA)** : Refer to 55000 series.

Preferential lists : see specifications.

5000 series

Miniature toggle switches •
threaded bushing Ø 6.35 mm or plain bushing

INSULATING CAPS

BASIC P/N

U270 For standard lever & threaded bushing only
U1040 For standard lever & plain bushing only
U1710 For lever 17 and threaded bushing
For lever 7 and plain bushing

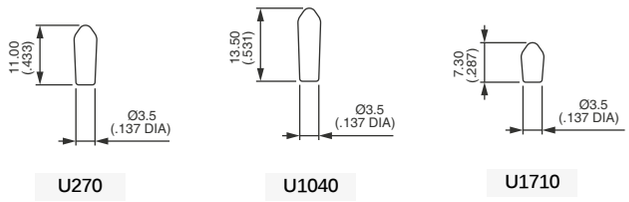

U270 U1040 U1710

For cap colors, replace "**0**" with number :

1	Blue
1/4	Dark blue
2	Black
3	Green
4	Grey
5	Yellow
6	Red
7/1	White
9	Orange

PADDLES

For use with lever 4N only. Shown with standard threaded bushing. **Order separately.**

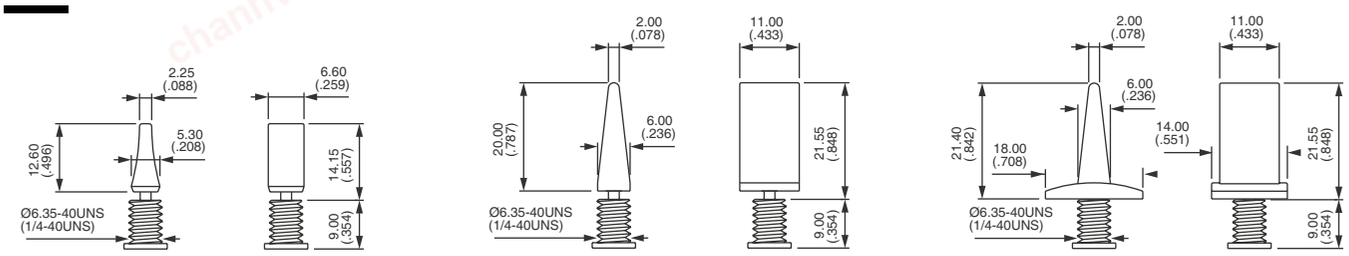

U240N U290N U390N

For cap colors, replace "**0**" with number :

1	Blue
1/4	Dark blue
2	Black
3	Green
4	Grey
5	Yellow
6	Red
7	Ivory
7/1	White
9	Orange