chanhvinh.com

IP series

Pushbutton switches for harsh environments - bushing Ø 12 mm - momentary

Distinctive features and specifications

UG1410A



- ❑ **Illuminated or non-illuminated**
- ❑ **Tactile feedback**
- ❑ **Wide variety of configurations**
- ❑ **Flat round actuator for optional marking**
- ❑ **Sealed to IP67**

B1

ENVIRONMENTAL SPECIFICATIONS

- Front panel sealing : IP67 according to IEC 60529
  IP69K according to DIN 40050-9 (non-illuminated) with cap U5125
- Shock resistance : 100 g according to IEC 512-4, test 6c
- Vibration resistance : 10-500Hz - 10 g according to IEC 512-4, test 6d
- Salt spray : IEC 512-6, test 11f
- Robustness (non-illuminated) : IK06 according to EN 50102 (1 joule)
- Operating temperature : -40°C to +85°C

ELECTRICAL SPECIFICATIONS

- Max. current/voltage rating with resistive load (gold plated silver contacts):
  5A 28VDC, 70.000 cycles
  0,2A 48VDC, 500.000 cycles
  0,5A 48VAC, 500.000 cycles
- Initial contact resistance : 100 mΩ max.
- Insulation resistance : 1 GΩ min. at 500VDC
- Dielectric strength : 1.500 Vrms
- Contact bounce : 10 ms

For W terminals, current has to be limited to 400mA.

LED COMPONENT SPECIFICATIONS			
LED colour	Forward current	Typ. forward voltage	Max. forward voltage
Super red (L0S)	20mA	2,1V	2,3V
Yellow (L0Y)	20mA	2,1V	2,3V
Green (L0G)	20mA	2,1V	2,3V
Blue (L0B)	20mA	3,2V	3,8V
White (L0W)	20mA	3,35V	4,25V

A resistor must be series-connected by the user.

$$\text{Resistor value} = \frac{\text{supply voltage - LED forward voltage}}{\text{LED forward current}}$$

GENERAL SPECIFICATIONS

- Panel thickness : 1,5 mm (.059) min. 4 mm (.157 max.)
- Total travel :
  Funct. 3 : 1,7 mm (.067) +/- 0,3 mm
  Funct. 5 : 1,3 mm (.051) +/- 0,3 mm
- Typical operating force : 6N +/- 2N
- Low level/mech. life : 1.000.000 cycles
- Torque : 1,5 Nm max. applied to nut
- Soldering : 320°C max. for 3 sec.

MATERIALS

- Case : thermoplastic UL94-V0
- Actuator : polyamide 6/6
- Bushing/bezel : zinc die-cast (zamac), black painted
- Contacts : silver, gold plated (std) brass, gold plated (for option 104)
- Output wires (flying lead terminals) :
  F version : AWG20, section 0,6 mm²
  W version : AWG24, section 0,23 mm²
- LED wires :
  F version : AWG26, section 0,12 mm²
  W version : AWG24, section 0,23 mm²
- Lens : polycarbonate
- Terminal seal : epoxy

AGENCY APPROVAL

2A 125VAC/250VAC
File E83438

See following pages.

MOUNTING

Panel cut-out

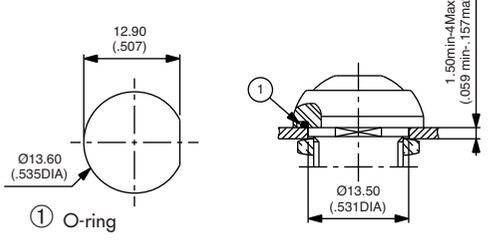

Matrix mounting

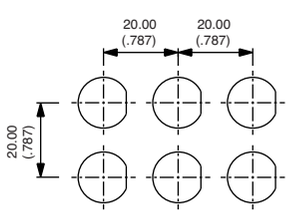

Back of panel space requirement

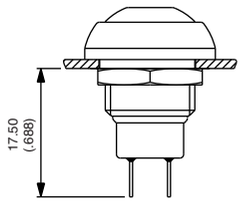

chanhvinh.com

IP series

Pushbutton switches for harsh environments - bushing Ø 12 mm - momentary

Overview

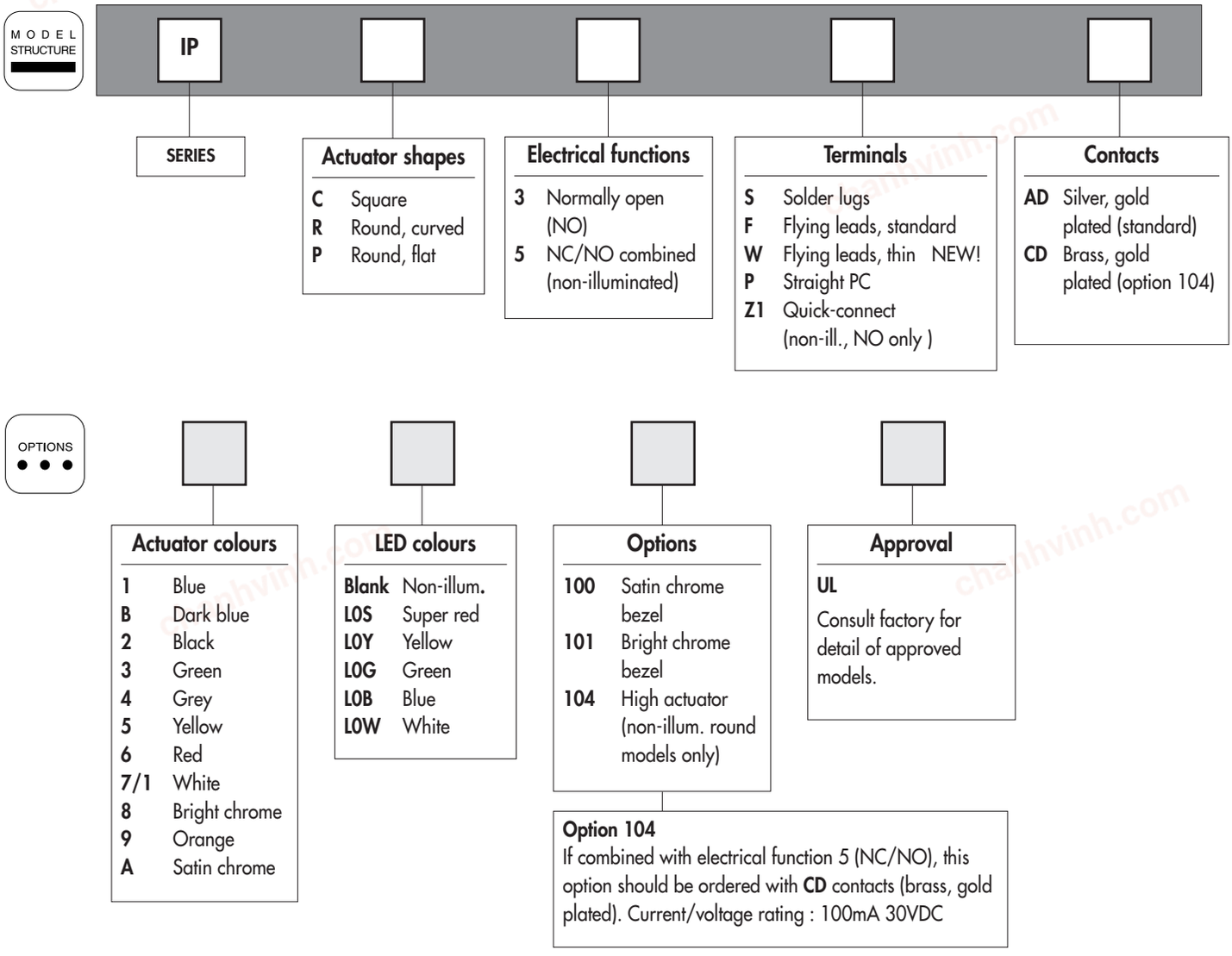

ABOUT THIS SERIES
On the following pages, you will find successively :
model structure of switches and options in the same order as in above chart

Dimensions : first dimensions are in mm while inches are shown as bracketed numbers.

NOTICE : please note that not all combinations of above numbers are available.
Refer to the following pages for further information.

A sealing boot is available to protect the switches against frost and sand. It is presented after the IA series and in section H.

Mounting accessories : Standard hardware supplied : 1 hex nut 14 mm (.551) across flats and 1 O-ring.
Hex nut part number U166.

Packaging unit : 25 pieces

The company reserves the right to change specifications without notice.

chanhvinh.com

IP series

Pushbutton switches for harsh environments - bushing Ø 12 mm - momentary

Square - illuminated

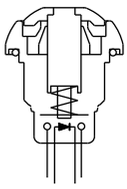

Function 3 (NO)

- High brightness illumination
- Five LED colours
- Tin plated LED terminals

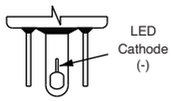

MODEL STRUCTURE

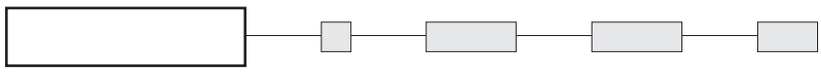

Shown with standard flying lead terminals.

Solder lug terminals



IPC3SAD  Normally Open

Also available with straight PC terminals : **IPC3PAD**
LED colour is indicated by the bottom of the switch.

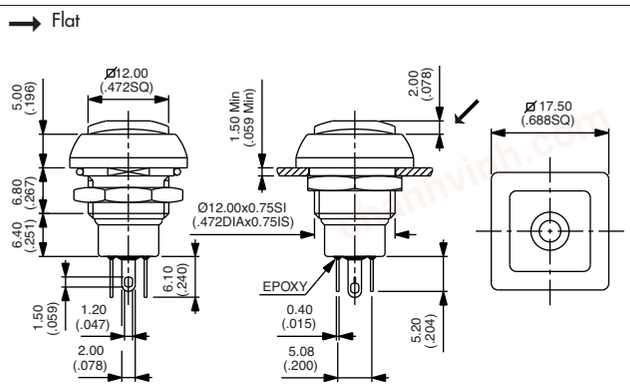

Sealed flying lead terminals



IPC3FAD  Normally Open

For THIN flying leads, replace F with W.

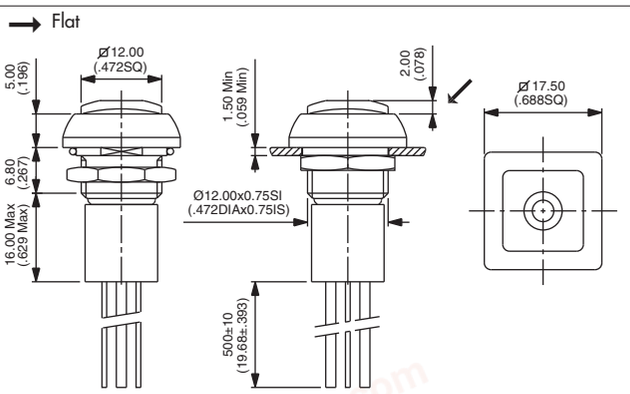

Wire colours : black : NO contact, red : LED anode(+), blue : LED cathode(-)

ACTUATOR COLOURS

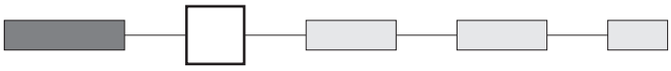

1 : blue - **B** : dark blue - **2** : black - **3** : green - **4** : grey
5 : yellow - **6** : red - **7/1** : white - **8** : bright chrome
9 : orange - **A** : satin chrome

LED COLOURS

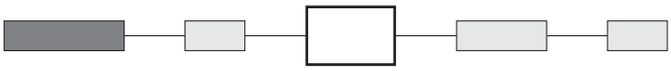

L0S : super red - **L0Y** : yellow - **L0G** : green - **L0B** : blue
L0W : white

OPTIONS

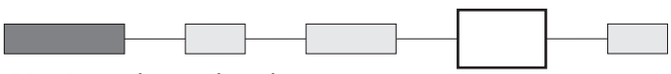

100 : Satin chrome bezel
101 : Bright chrome bezel

APPROVAL

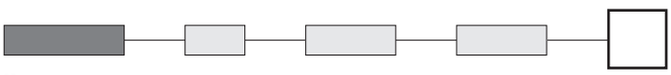

UL
Consult factory for details of approved models. To order switches marked UL, complete above box with "UL".

chanhvinh.com

IP series

Pushbutton switches for harsh environments - bushing Ø 12 mm - momentary

Square - non-illuminated

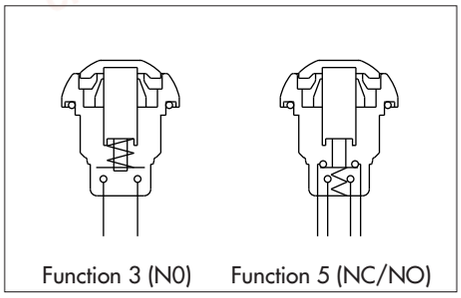

- Double function (NC/NO combined) with a short behind-panel depth

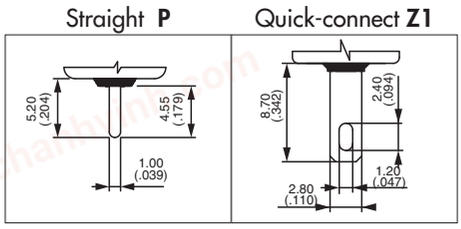

B1

MODEL STRUCTURE

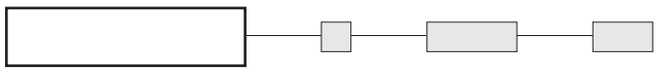

Shown with standard flying lead terminals.

Solder lug terminals



IPC3SAD		Normally Open
IPC5SAD		NC/NO combined

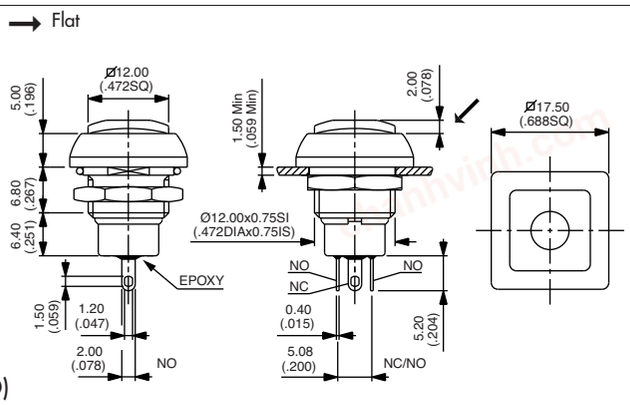

Also available with straight PC terminals : **IPC3PAD** (NO) or **IPC5PAD** (NC/NO) and quick-connect terminals : **IPC3Z1AD** (NO only)

Sealed flying lead terminals



IPC3FAD		Normally Open
IPC5FAD		NC/NO combined

For THIN flying leads, replace F with W.

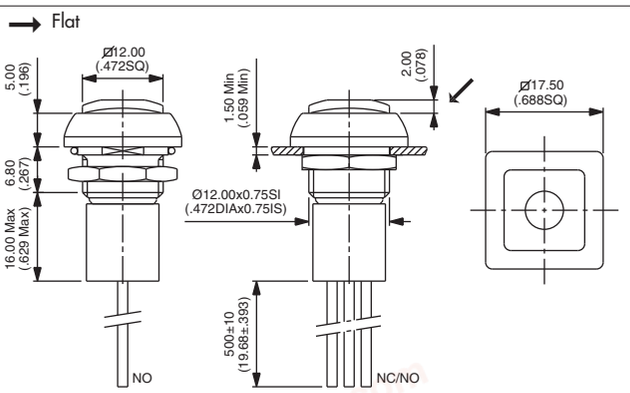

Wire colours (NC/NO) : black : NO, blue : NC

ACTUATOR COLOURS

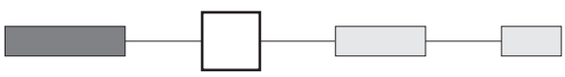

1 : blue - **B** : dark blue -**2** : black - **3** : green - **4** : grey - **5** : yellow - **6** : red - **7/1** : white - **8** : bright chrome
9 : orange - **A** : satin chrome

OPTIONS

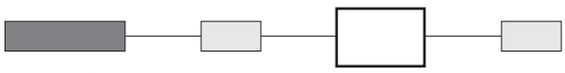

100 : Satin chrome bezel
101 : Bright chrome bezel

APPROVAL

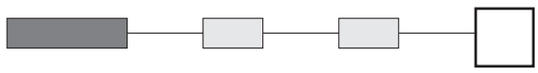

UL
Consult factory for details of approved models. To order switches marked UL, complete above box with "UL".

chanhvinh.com

IP series

Pushbutton switches for harsh environments - bushing Ø 12 mm - momentary

Round - illuminated

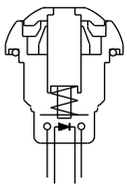

Function 3 (NO)

- High brightness illumination
- Five LED colours
- Tin plated LED terminals

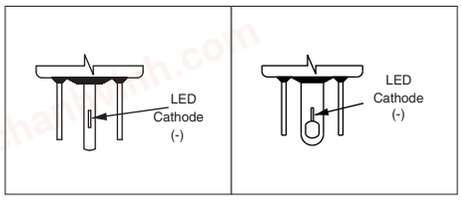

MODEL STRUCTURE

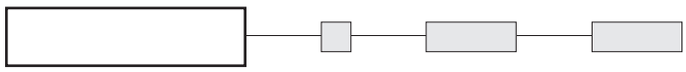

Shown with standard flying lead terminals.

Solder lug terminals



IPR3SAD  Normally Open

Also available with straight PC terminals : **IPR3PAD**
LED colour is indicated by the bottom of the switch.

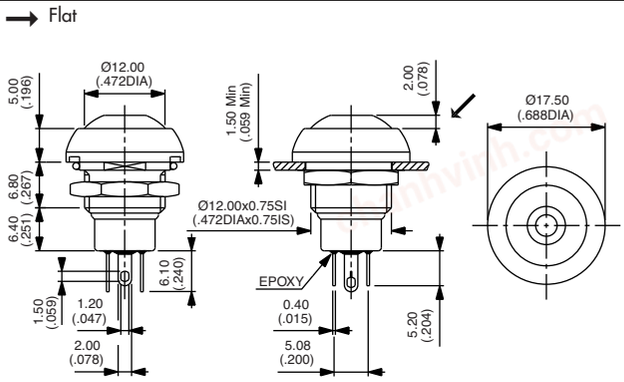

Sealed flying lead terminals



IPR3FAD  Normally Open

For THIN flying leads, replace F with W.

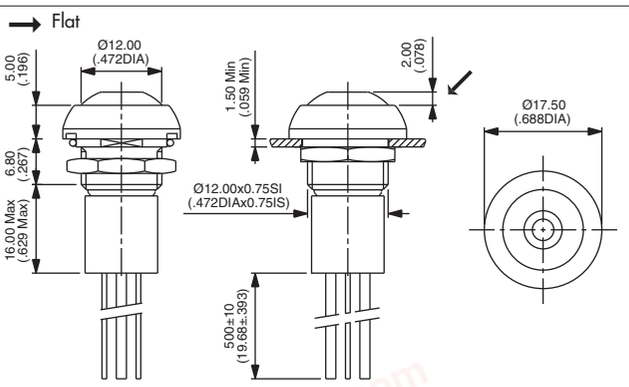

Wire colours : black : NO contact, red : LED anode(+), blue : LED cathode(-)

ACTUATOR COLOURS

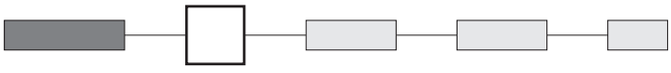

1 : blue - **B** : dark blue - **2** : black - **3** : green - **4** : grey
5 : yellow - **6** : red - **7/1** : white - **8** : bright chrome
9 : orange - **A** : satin chrome

LED COLOURS

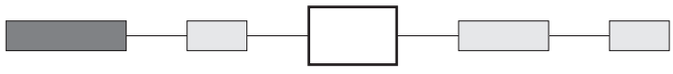

L0S : super red - **L0Y** : yellow - **L0G** : green - **L0B** : blue
L0W : white

OPTIONS

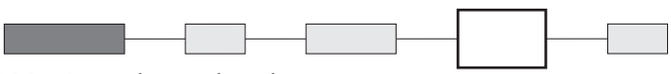

100 : Satin chrome bezel
101 : Bright chrome bezel

APPROVAL

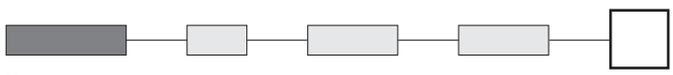

UL
Consult factory for details of approved models. To order switches marked UL, complete above box with "UL".

IP series

Pushbutton switches for harsh environments - bushing Ø 12 mm - momentary

Round - non-illuminated

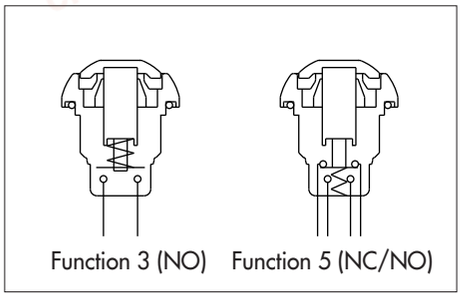

- Double function (NC/NO combined) with a short behind-panel depth

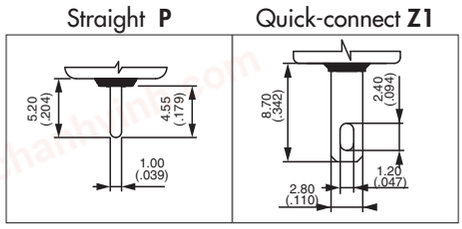

MODEL STRUCTURE

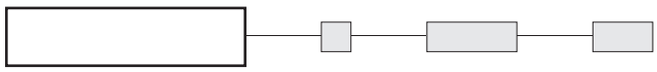

Shown with standard flying lead terminals.
Actuator marking available on IPP models (symbol 10 mm max.). On request.

B1

Solder lug terminals



Curved actuator, NO
IPR3SAD
Curved actuator, NC/NO
IPR5SAD

Flat actuator, NO
IPP3SAD
Flat actuator, NC/NO
IPP5SAD

Also available with straight PC terminals : **IP•3PAD** (NO) or **IP•5PAD** (NC/NO) and quick-connect terminals : **IP•3Z1AD** (NO only)

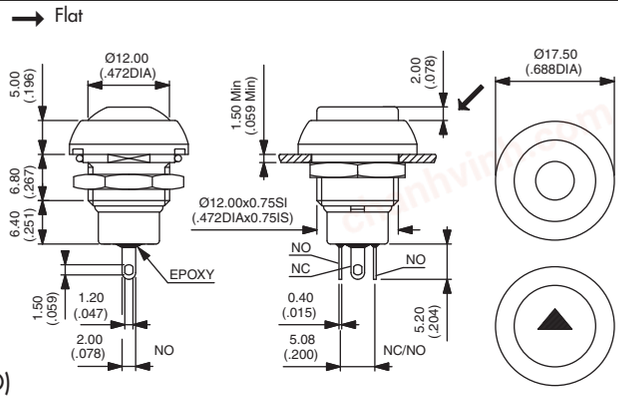

Sealed flying lead terminals



Curved actuator, NO
IPR3FAD
Curved actuator, NC/NO
IPR5FAD

Flat actuator, NO
IPP3FAD
Flat actuator, NC/NO
IPP5FAD

For THIN flying leads, replace F with W.

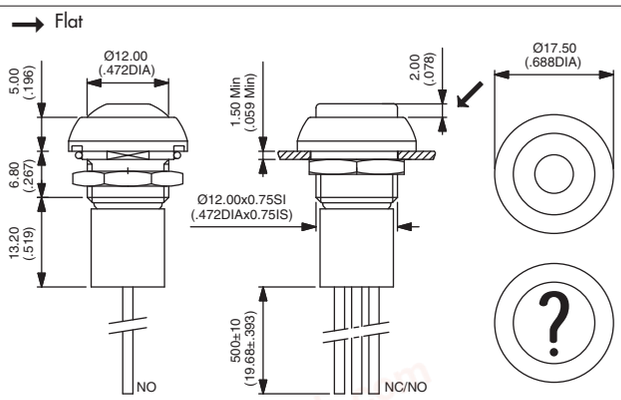

Wire colours (NC/NO) : black : NO, blue : NC

ACTUATOR COLOURS

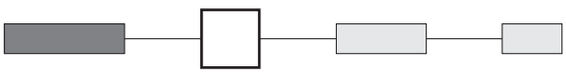

1 : blue - **B** : dark blue - **2** : black - **3** : green - **4** : grey
5 : yellow - **6** : red - **7/1** : white - **8** : bright chrome
9 : orange - **A** : satin chrome

APPROVAL

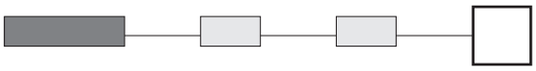

UL
Consult factory for details of approved models. To order switches marked UL, complete above box with "UL".

OPTIONS

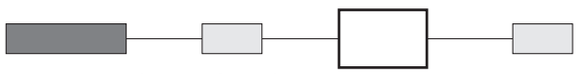

100 : Satin chrome bezel
101 : Bright chrome bezel
104 : High actuator - If combined with function 5 (NC/NO), order with CD contacts (instead of AD contacts).

