chanhvinh.com

A1-A01-A02-A03 series

Industrial controls

Distinctive features

The A01 and A02 series offer ranges of :
- pushbutton switches, illuminated or not
- indicators
- 2 or 3 position keylock switches
- 2 or 3 position rotary lever switches
- emergency stop switches
with rectangular, square or round operators.

- ❑ **Environmental protection : IP65**
- ❑ **Modular construction**
- ❑ **Electrical life : 50.000 cycles min.**
- ❑ **Screen engraving or insertable legends on request**
- ❑ **Approvals (for switch blocks only)**

c UL us UL 1054 BS RIA 20 Shock & Vibration

DVE EN 61058-1 CE

UG1410A



Each sub-assembly has to be ordered separately.

A01 - A1 - A03 series

- Panel cut-out :
  Ø 16 mm (.630), except :
  - flush mount round : Ø 22 mm (.866)
  - flush mount rectangular : 20.60 x 26.70 mm
  - flush mount square : 20.60 x 20.60 mm
  - A1 series : Ø 22 mm (.866)
  - A03 series : round or square Ø 22 (.866)
    flush mount : Ø 30 mm (1.378)
- 1, 2, 3 and 4 poles
- Solder lug/quick-connect terminals
- Contacts : silver, gold plated
- Current/voltage rating :
  6A 250VAC max. - 10mA 5VAC min.
  These values are applicable for all components, accessories and lamps, unless otherwise specified in the following pages.
- Lamp : filament, neon or LED

A02 series

- Panel cut-out :
  - round or square : Ø 22 mm (.866)
  - rectangular : 29,5 x 21,5 mm (1.160x.846)
  - flush mount : Ø 30 mm (1.378)
- 1 and 2 poles
- Screw terminals (optional : quick-connect term.)
- Contacts : silver
- Current/voltage rating : 12A 380VAC
  16A 250VAC max. - 25mA 5VAC min.
  These values are applicable for all components, accessories and lamps, unless otherwise specified in the following pages.
- Lamp : filament, neon, LED
  or special multi-LED array

Option : end cap terminal guard. Order separately (see end of A02 series).

Packaging unit :
A1 : 25 pieces - A01 : 20 pieces (except pushbuttons: 25 pieces) - A02 : 25 pieces - A03 : 10 pieces.
Dimensions : first dimensions are in mm while inches are shown as bracketed numbers.

The company reserves the right to change specifications without notice.

chanhvinh.com

A1-A01-A02-A03 series

Industrial controls

Specifications for pushbutton, keylock and rotary switches

ELECTRICAL SPECIFICATIONS

	A01 - A1 - A03	A02
• **Function** :	Momentary or maintained action	Momentary or maintained action
• **Current/voltage rating** :	10mA 5VAC min. 6A 250VAC max. - 6A 12VDC max.	25mA 5VAC min. 12A 380VAC - 16A 250VAC max. 12A 12VDC max.
• **Contact gap**	> 1 mm (.039)	Double break 2 x 1,5 mm (.059)
• **Initial contact resistance** :	10mΩ max. at 1A 4VDC	10mΩ max. at 1A 4VDC
• **Insulation resistance** :	50 MΩ min.	50 MΩ min.
• **Dielectric strength** :	750V between open contacts 5KV live to accessible	2KV between open contacts 4KV live to accessible
• **Electrical life (resistive load)** :	50.000 cycles	50.000 cycles
• **Insulation** :	Class 2	Class 2
• **Lamp life** :	LED : 60.000 h min. to 75% relative luminosity - Filament : approx. 5.000 h Neon : approx. 10.000 h	LED : 60.000 h min. to 75 % relative luminosity - Filament : approx. 5.000 h Neon : approx. 10.000 h
• **Lamp circuit diagrams**	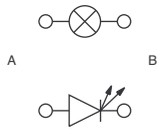	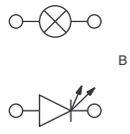

GENERAL SPECIFICATIONS

	A01 - A1 - A03	A02
• **Min. mechanical life** :	Pushb. momentary : 1 million cycles Pushb. maintained : 100.000 cycles Keylock and rotary : 100.000 cycles	Pushb. momentary: 1 million cycles Pushb. maintained : 100.000 cycles Keylock and rotary : 100.000 cycles
• **Panel thickness**	8 mm (.315) max.	8 mm (.315) max.
• **Operating temperature** :	-20°C to +55°C	-20°C to +85°C
• **Solder heat resistance** : (IEC 68-2-20Tb, method 2)	350°C, 5 sec.	350°C, 5 sec.
• **Degree of environmental protection** (IEC 529)	IP 65 front of panel IP 40 back of panel	IP 65 front of panel IP 40 back of panel
• **Lamps** :	Midget Grooved T1 3/4, filament, LED or neon	Midget Grooved T1 3/4, filament, LED or neon Special multi-LED array
• **Switch terminals** :	Solder/quick-connect 2,8 mm (.110)	M3 screws - wire 2 x 0,75 mm² max.
• **Lamp terminals** :	Solder/quick-connect 2,8 mm (.110)	M3 screws Flexible wire 2 x 2,5 mm² max. Rigid wire 4 mm² max.

Specifications for emergency stop switches : see pages 10 and 22.

For screen engraving or film legends, contact APEM.

chanhvinh.com

A1 series

Engraved aluminium flush mounting pushbuttons and indicators

Panel cut-out Ø 22 (.866)

A pushbutton assembly requires :
engraved screen + lamp (if illuminated) + operator + switch block + flush mount bezel.
To order these elements, select desired model numbers from the table below.
Example : pushbutton, round, illuminated, sealed to IP65, latching, single pole with "start" engraving, 24V blue LED and flush mounting bezel = A1PCA1X103K403.

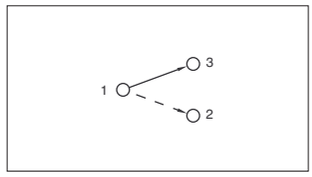



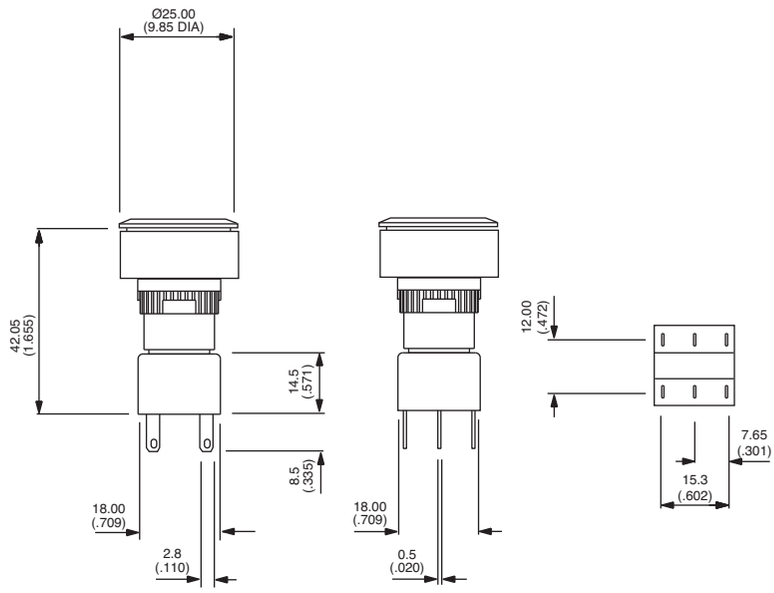

A1									
Switch Type	**Bezel**	**Illumination**	**Sealing**	**Function**	**Switch block**			**Accessories**	
P - pushbutton	C - round	A - illuminated	0 - unsealed	0 - indicator	0 - indicator			03 - flushmount	
I - indicator		B - non-illum.	1 - sealed IP65	X - latching	1 - single pole				
				Y - momentary	2 - double pole				
					5 - three pole				
					3 - four pole				

Bulb

A1	- filament 6.3V
B1	- filament 14V
C1	- filament 28V
D1	- filament 36V
E1	- filament 48V
F1	- filament 60V
G1	- Neon 110V
H1	- Neon 220V
I1	- Led 6V red
I2	- Led 6V green
I3	- Led 6V amber
J1	- Led 12V red
J2	- Led 12V green
J3	- Led 12V amber
J4	- Led 12V blue
J5	- Led 12V white
K1	- Led 24V red
K2	- Led 24V green
K3	- Led 24V amber
K4	- Led 24V blue
K5	- Led 24V white
L1	- Led 48V red
L2	- Led 48V green
L3	- Led 48V amber

Engraved Screen Options

01 - Front Fog Lights	11 - 'Lock'
02 - Rear Fog Lights	12 - 'Unlock'
03 - 'Start'	13 - Rear Window Heating
04 - Interior Light	14 - Cooling
05 - Boot Release	15 - Wipers
06 - Hazard Warning	16 - Washers
07 - Lights	17 - Fan
08 - Heating & Ventilation	18 - Horn
09 - Map Lights	19 - Air recirculation
10 - Side Lights	20 - Blank

OTHER SCREEN ENGRAVING OPTIONS :
contact APEM.

chanhvinh.com

A01 series

Illuminated or non-illuminated pushbutton switches

Panel cut-out Ø 16 (.630)

A pushbutton assembly requires :
screen + lamp (if illuminated) + operator + switch block.
To order these elements, select desired model numbers from tables below.
Example : IP65 rectangular pushbutton, single pole, maintained, red screen and 12V red LED = A0161B, A0142M1, A0101X and A0151BUL.

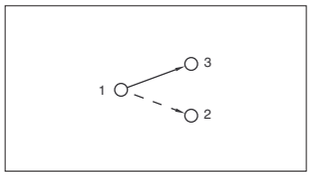

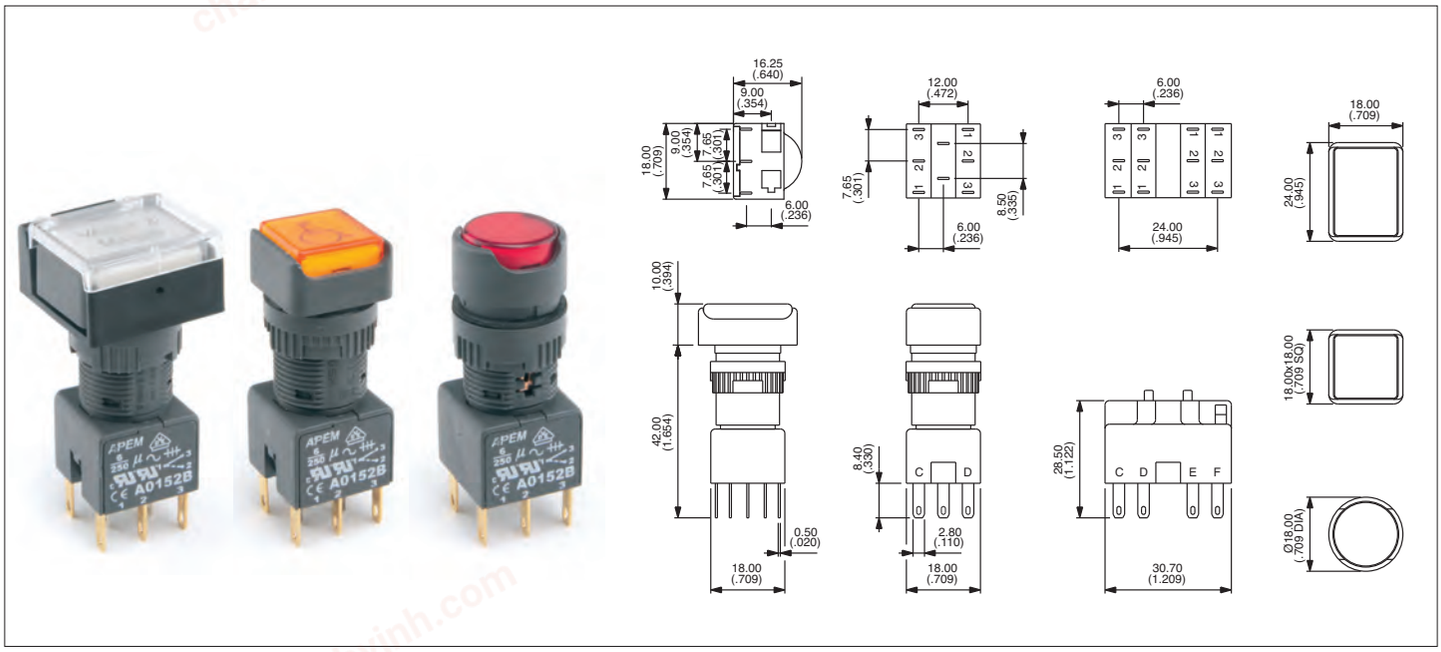

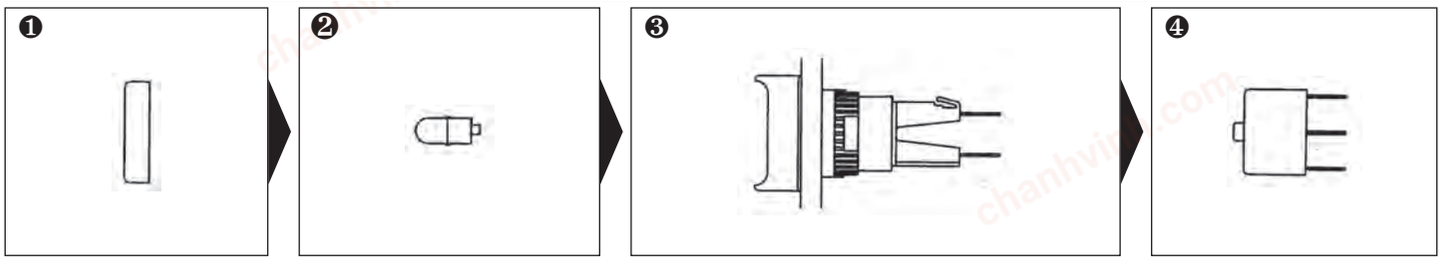

Screen

Bezel	Colour	Part No
▭	black	**A0161A**
▭	red	**A0161B**
▭	amber	**A0161C**
▭	yellow	**A0161D**
▭	green	**A0161E**
▭	blue	**A0161F**
▭	clear	**A0161G**
▭	white	**A0161J**
□	black	**A0162A**
□	red	**A0162B**
□	amber	**A0162C**
□	yellow	**A0162D**
□	green	**A0162E**
□	blue	**A0162F**
□	clear	**A0162G**
□	white	**A0162J**
○	black	**A0163A**
○	red	**A0163B**
○	amber	**A0163C**
○	yellow	**A0163D**
○	green	**A0163E**
○	blue	**A0163F**
○	clear	**A0163G**
○	white	**A0163J**

Lamp

Lamp	Voltage	Part No
Filament	6.3V	**A0141A**
Filament	14V	**A0141B**
Filament	28V	**A0141C**
Filament	36V	**A0141D**
Filament	48V	**A0141E**
Filament	60V	**A0141F**
Neon	110V	**A0143G**
Neon	220V	**A0143H**
LED	6V red	**A0142L1**
LED	6V green	**A0142L2**
LED	6V amber	**A0142L3**
LED	12V red	**A0142M1**
LED	12V green	**A0142M2**
LED	12V amber	**A0142M3**
LED	12V blue	**A0142M4**
LED	12V white	**A0142M5**
LED	24V red	**A0142N1**
LED	24V green	**A0142N2**
LED	24V amber	**A0142N3**
LED	24V blue	**A0142N4**
LED	24V white	**A0142N5**
LED	48V red	**A0142P1**
LED	48V green	**A0142P2**
LED	48V amber	**A0142P3**

Operator

Pole	Bezel	Description	Part No
1 or 2	▭	Illum, momentary	**A0101Y**
1 or 2	▭	Illum, maintained	**A0101X**
1 or 2	▭	Non-illum, momentary	**A0102Y**
1 or 2	▭	Non-illum, maintained	**A0102X**
3 or 4	▭	Illum, momentary	**A0103Y**
3 or 4	▭	Illum, maintained	**A0103X**
3 or 4	▭	Non-illum, momentary	**A0104Y**
3 or 4	▭	Non-illum, maintained	**A0104X**
1 or 2	□	Illum, momentary	**A0105Y**
1 or 2	□	Illum, maintained	**A0105X**
1 or 2	□	Non-illum, momentary	**A0106Y**
1 or 2	□	Non-illum, maintained	**A0106X**
3 or 4	□	Illum, momentary	**A0107Y**
3 or 4	□	Illum, maintained	**A0107X**
3 or 4	□	Non-illum, momentary	**A0108Y**
3 or 4	□	Non-illum, maintained	**A0108X**
1 or 2	○	Illum, momentary	**A0109Y**
1 or 2	○	Illum, maintained	**A0109X**
1 or 2	○	Non-illum, momentary	**A0110Y**
1 or 2	○	Non-illum, maintained	**A0110X**
3 or 4	○	Illum, momentary	**A0111Y**
3 or 4	○	Illum, maintained	**A0111X**
3 or 4	○	Non-illum, momentary	**A0112Y**
3 or 4	○	Non-illum, maintained	**A0112X**

Switch block

No of poles	Part No
Single pole	**A0151B**
Double pole	**A0152B**
Three pole	**A0155B**
Four pole	**A0153B**

UNSEALED SWITCHES (IP40) : add "01" to end of **operator** model number.

BI-COLOUR LED's optional.

SCREEN ENGRAVING/INSERTABLE LEGENDS : contact APEM

Bezel: ▭ rectangular, □ square, ○ round, 'Illum' - illuminated, 'Non-illum' - non illuminated

chanhvinh.com

A01 series

Indicators

Panel cut-out Ø 16 (.630)

An indicator assembly requires :
screen + lamp + operator.
To order these elements, select desired model numbers from tables below.
Example : IP65 rectangular indicator with red screen and 12V red LED = A0161B, A0142M1 and A0171.

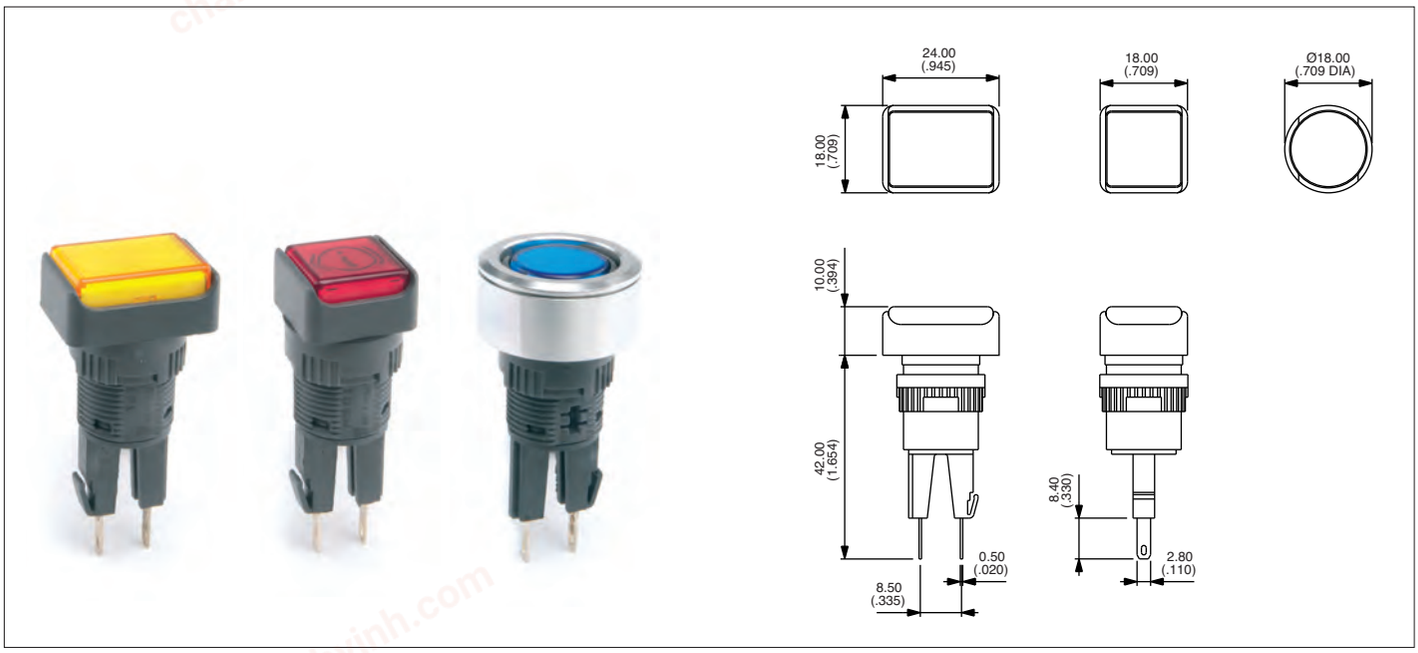

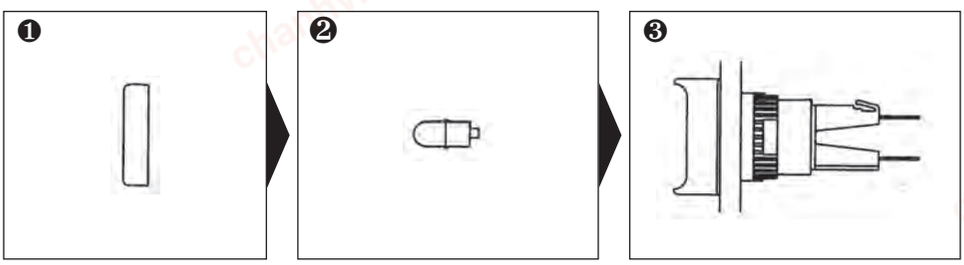

Screen

Bezel	Colour	Part No
▭	black	**A0161A**
▭	red	**A0161B**
▭	amber	**A0161C**
▭	yellow	**A0161D**
▭	green	**A0161E**
▭	blue	**A0161F**
▭	clear	**A0161G**
▭	white	**A0161J**
□	black	**A0162A**
□	red	**A0162B**
□	amber	**A0162C**
□	yellow	**A0162D**
□	green	**A0162E**
□	blue	**A0162F**
□	clear	**A0162G**
□	white	**A0162J**
○	black	**A0163A**
○	red	**A0163B**
○	amber	**A0163C**
○	yellow	**A0163D**
○	green	**A0163E**
○	blue	**A0163F**
○	clear	**A0163G**
○	white	**A0163J**

Lamp

Lamp	Voltage	Part No
Filament	6.3V	**A0141A**
Filament	14V	**A0141B**
Filament	28V	**A0141C**
Filament	36V	**A0141D**
Filament	48V	**A0141E**
Filament	60V	**A0141F**
Neon	110V	**A0143G**
Neon	220V	**A0143H**
LED	6V red	**A0142L1**
LED	6V green	**A0142L2**
LED	6V amber	**A0142L3**
LED	12V red	**A0142M1**
LED	12V green	**A0142M2**
LED	12V amber	**A0142M3**
LED	12V blue	**A0142M4**
LED	12V white	**A0142M5**
LED	24V red	**A0142N1**
LED	24V green	**A0142N2**
LED	24V amber	**A0142N3**
LED	24V blue	**A0142N4**
LED	24V white	**A0142N5**
LED	48V red	**A0142P1**
LED	48V green	**A0142P2**
LED	48V amber	**A0142P3**

Operator

Bezel	Description	Part No
▭	Indicator	**A0171**
□	Indicator	**A0172**
○	Indicator	**A0173**

UNSEALED INDICATORS (IP40) :
add "01" to end of **operator** model number.

SCREEN ENGRAVING / INSERTABLE LEGENDS : contact APEM

Bezel: ▭ rectangular, □ square, ○ round

chanhvinh.com

A01 series

Rotary lever switches

Panel cut-out Ø 16 (.630)

A rotary lever switch assembly requires :
operator + switch block.
To order these elements, select desired model numbers from tables below.
Example : IP65 rectangular rotary switch with long lever, clockwise rotation, single pole, 2 positions, maintained = A019109 and A0151BUL.

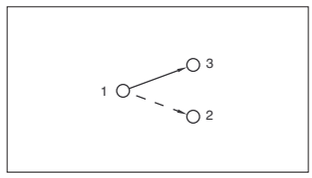

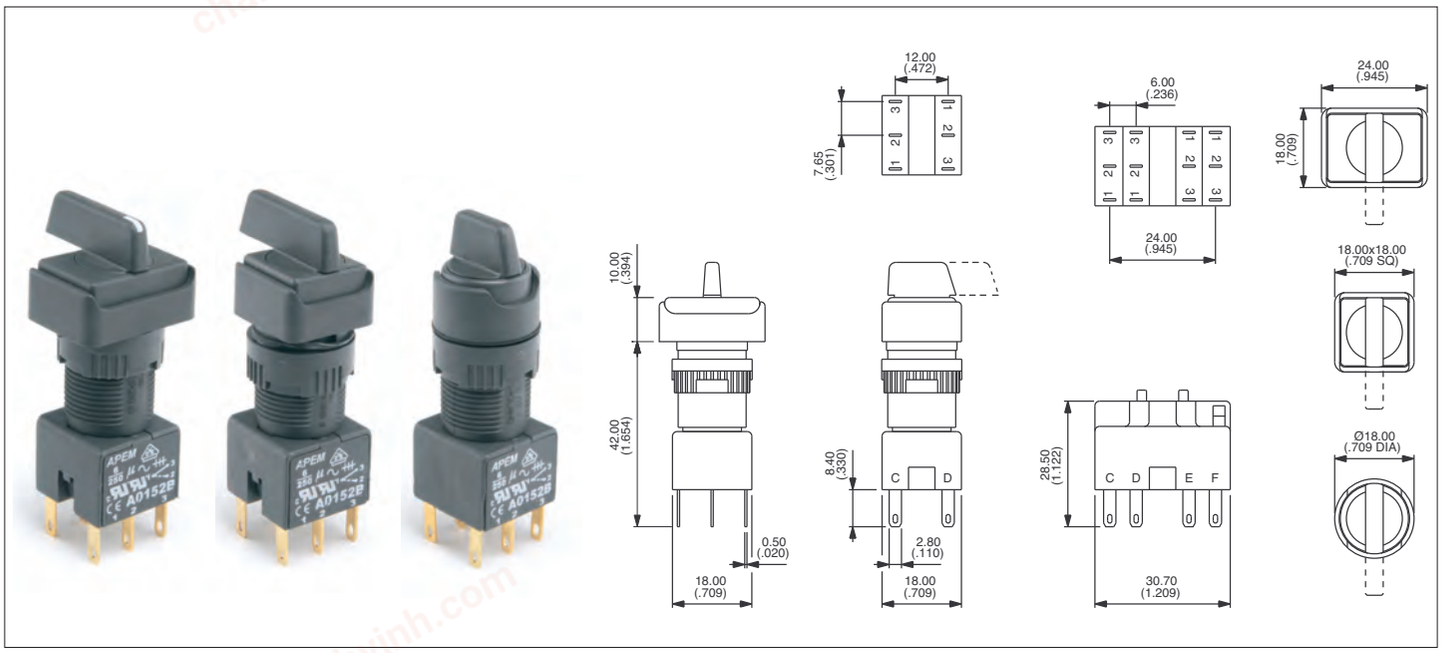

❶

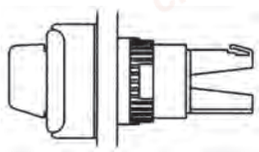

❷

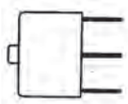

Operator

Pole	Bezel	Description	Short lever	Long lever
1 or 2	▭	2 pos. maintained	**A019209**	**A019109•**
1 or 2	▭	2 pos. momentary	**A019210**	**A019110•**
3 or 4	▭	2 pos. maintained	**A019211**	**A019111•**
3 or 4	▭	2 pos. momentary	**A019212**	**A019112•**
1 or 2	▭	3 pos. maintained	**A019205**	**A019105**
1 or 2	▭	3 pos. momentary	**A019206**	**A019106**
1 or 2	▭	3 pos. mainL, momR	**A019207**	**A019107**
1 or 2	▭	3 pos. momL, mainR	**A019208**	**A019108**
1 or 2	□	2 pos. maintained	**A019409**	**A019309•**
1 or 2	□	2 pos. momentary	**A019410**	**A019310•**
3 or 4	□	2 pos. maintained	**A019411**	**A019311•**
3 or 4	□	2 pos. momentary	**A019412**	**A019312•**
1 or 2	□	3 pos. maintained	**A019405**	**A019305**
1 or 2	□	3 pos. momentary	**A019406**	**A019306**
1 or 2	□	3 pos. mainL, momR	**A019407**	**A019307**
1 or 2	□	3 pos. momL, mainR	**A019408**	**A019308**
1 or 2	○	2 pos. maintained	**A019609**	**A019509•**
1 or 2	○	2 pos. momentary	**A019610**	**A019510•**
3 or 4	○	2 pos. maintained	**A019611**	**A019511•**
3 or 4	○	2 pos. momentary	**A019612**	**A019512•**
1 or 2	○	3 pos. maintained	**A019605**	**A019505**
1 or 2	○	3 pos. momentary	**A019606**	**A019506**
1 or 2	○	3 pos. mainL, momR	**A019607**	**A019507**
1 or 2	○	3 pos. momL, mainR	**A019608**	**A019508**

Switch block

No of poles	Part No
Single pole	**A0151B**
Double pole	**A0152B**
Three pole	**A0155B**
Four pole	**A0153B**

Lever Positions

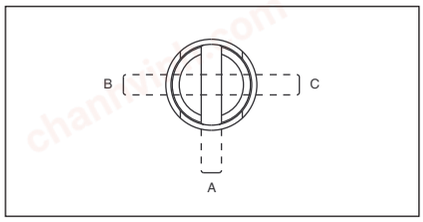

• Lever Rotation - 2 position switches

The model numbers shown are for switches with clockwise lever rotation.
For anticlockwise rotation, replace :

09	with	**01**
10	with	**02**
11	with	**03**
12	with	**04**

at the end of the model number.

Optional Engraving on Lever end

See above photo left.
To order, add "WL" to the end of the operator part No.
Example : A019609WL..

Bezel: ▭ rectangular, □ square, ○ round, 'pos' - position, 'mainL' - maintained left, 'momR' - momentary right, etc

chanhvinh.com

A01 series

Keylock switches

Panel cut-out Ø 16 (.630)

A keylock switch assembly requires :
operator + switch block.
To order these elements, select desired model numbers from tables below.
Example : IP65 rectangular keyswitch, clockwise rotation, single pole, 2 positions, maintained = A018125 and A0151BUL.

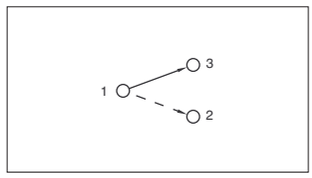

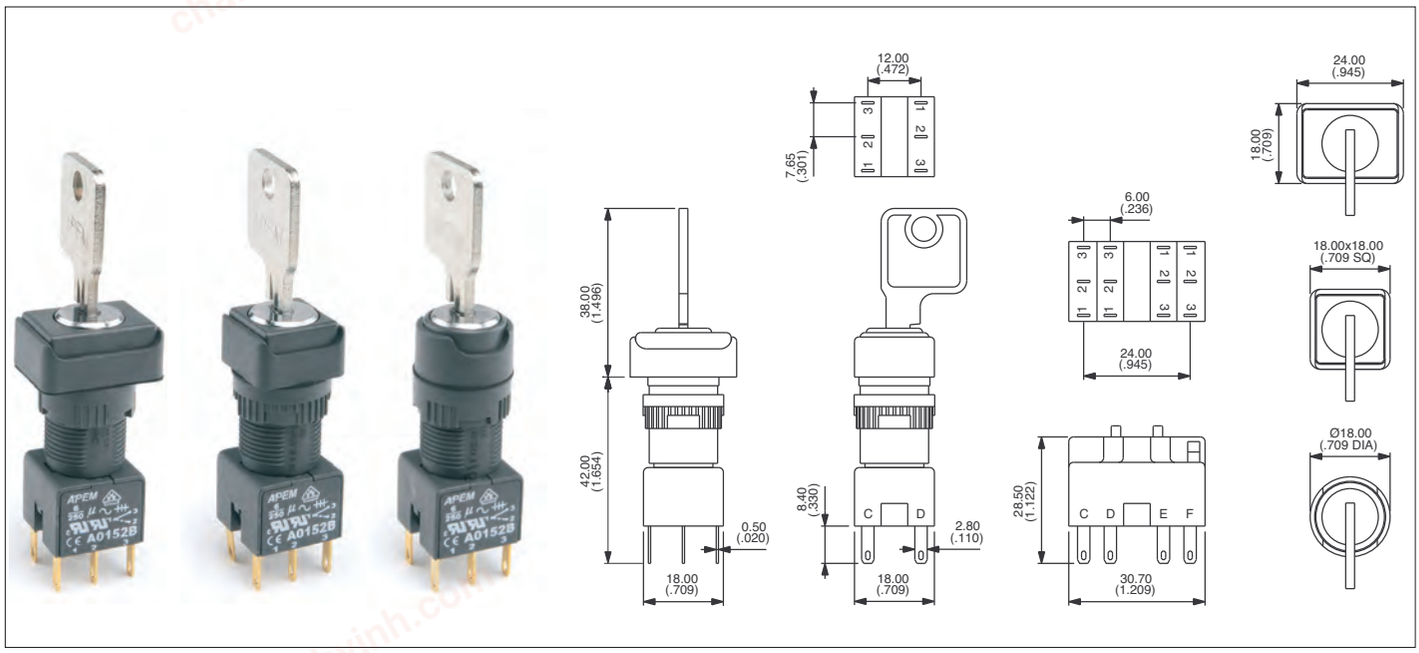

❶

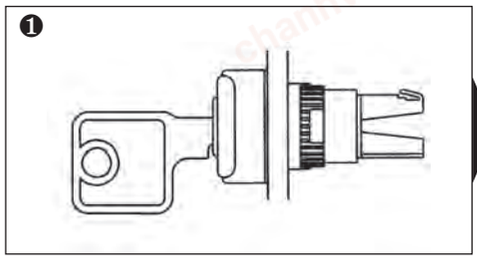

❷

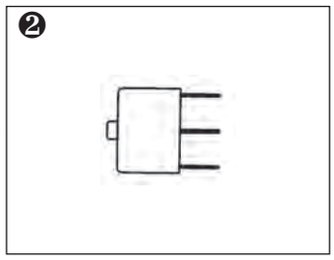

Operator

Pole	Bezel	Description	Part No	Key removable
1 or 2	▭	2 pos. maintained	**A018123**	A
1 or 2	▭	2 pos. maintained	**A018125•**	A-B
1 or 2	▭	2 pos. momentary	**A018124•**	A
3 or 4	▭	2 pos. maintained	**A018127•**	A-B
3 or 4	▭	2 pos. momentary	**A018128•**	A
1 or 2	▭	3 pos. maintained	**A018105**	A-B-C
1 or 2	▭	3 pos. momentary	**A018106**	A
1 or 2	▭	3 pos. mainL, momR	**A018107**	A-B
1 or 2	▭	3 pos. momL, mainR	**A018108**	A-C
1 or 2	□	2 pos. maintained	**A018223**	A
1 or 2	□	2 pos. maintained	**A018225•**	A-B
1 or 2	□	2 pos. momentary	**A018224•**	A
3 or 4	□	2 pos. maintained	**A018227•**	A-B
3 or 4	□	2 pos. momentary	**A018228•**	A
1 or 2	□	3 pos. maintained	**A018205**	A-B-C
1 or 2	□	3 pos. momentary	**A018206**	A
1 or 2	□	3 pos. mainL, momR	**A018207**	A-B
1 or 2	□	3 pos. momL, mainR	**A018208**	A-C
1 or 2	○	2 pos. maintained	**A018323**	A
1 or 2	○	2 pos. maintained	**A018325•**	A-B
1 or 2	○	2 pos. momentary	**A018324•**	A
3 or 4	○	2 pos. maintained	**A018327•**	A-B
3 or 4	○	2 pos. momentary	**A018328•**	A
1 or 2	○	3 pos. maintained	**A018305**	A-B-C
1 or 2	○	3 pos. momentary	**A018306**	A
1 or 2	○	3 pos. mainL, momR	**A018307**	A-B
1 or 2	○	3 pos. momL, mainR	**A018308**	A-C

Switch block

No of poles	Part No
Single pole	**A0151B**
Double pole	**A0152B**
Three pole	**A0155B**
Four pole	**A0153B**

Key Positions

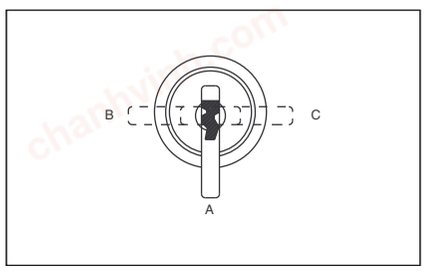

• Key Rotation - 2 position switches

The model numbers shown are for switches with clockwise key rotation.
For anticlockwise rotation, replace :

25	with	**01**
24	with	**02**
27	with	**03**
28	with	**04**

at the end of the model number.

2 standard keys are supplied.
20 key barrel types available.

NON-REMOVABLE KEY POSITIONS / ON-ON-ON FUNCTION : contact APEM.

Bezel: ▭ rectangular, □ square, ○ round, 'pos' - position, 'mainL' - maintained left, 'momR' - momentary right, etc

chanhvinh.com

A01 series

Emergency stop switches

Panel cut-out Ø 16 (.630)

- **Prominent 24 mm (.944) dia. or optional 40 mm (1.575) dia. red mushroom actuator**
- **Highly reliable positive break switch**
- **Push to shut off switch, twist to reset to ON**

An emergency stop switch assembly requires : operator + switch block.
To order, specify with single pole or double pole positive break switch block.

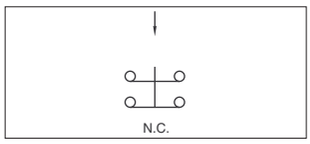

General specifications

- Min. mechanical life : 6.050 cycles (6 cycles per minute)
- Operating force / torque : 16 N / 0,1 Nm
- Operating temperature : -20°C to +55°C
- Solder heat resistance : 350°C, 5 secs (IEC 68-2-2-20Tb, method 2)
- Degree of environmental protection (IEC 529) :
  IP65 front of panel, IP40 back of panel
- Switch terminals : solder/quick-connect 2,8 mm (.110) (IEC 68-2-20)

Electrical specifications

- Current/voltage rating :
  1,5A 250VAC AC-15
- Contact gap : > 3 mm (.118)
- Dielectric strength : 2.900V
- Electrical life : 6.050 cycles





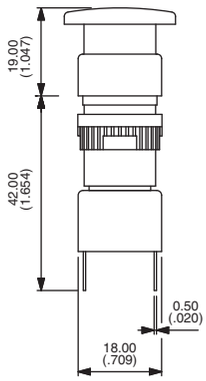

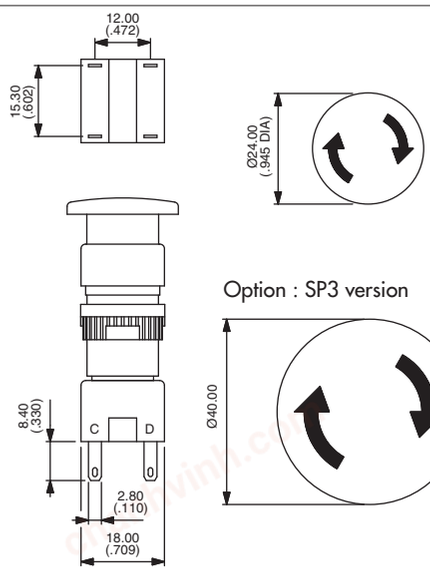

❶

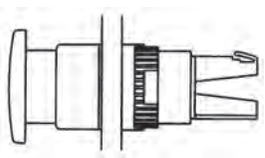

❷

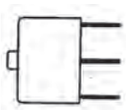

Operator

Description	Part No
24 mm Ø Emergency stop	**A01ES**
40 mm Ø Emergency stop	**A01ES SP3**

Switch block

No of poles	Part No
Single pole	**A0150B**
Double pole	**A0154B**

Accessory



Ø 60 mm Self Adhesive Label

Description	Part No
Yellow label with text	**A01YL1**
Yellow label	**A01YL2**

G

chanhvinh.com

A01 series

Emergency stop switches/mushroom head pushbutton switches

Fitted in enclosures

- **Prominent 40 mm (1.575) dia. mushroom actuator, twist to release**
- **Highly reliable positive break switching on E-Stop**
- **Sealed to IP65**
- **Robust polycarbonate enclosures**
- **Knockouts for popular conduit sizes**
- **Double pole changeover switch blocks available for momentary/maintained mushroom head pushbuttons.**

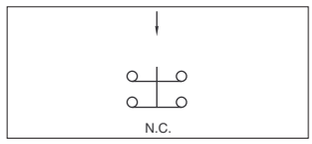

Emergency stop

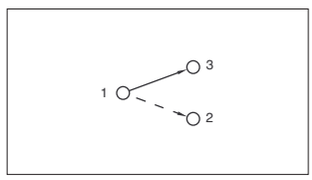

Momentary & maintained

Technical specifications

- Contact rating : Pushbutton switch : 6A 250VAC - E-Stop : 1,5A 250VAC
- Dimensions : 65 x 65 x 57 mm
- Electrical life : Pushbutton switch : 50 000 cycles - E-Stop : 6 050 cycles
- Operating temperature : -20°C to +55°C



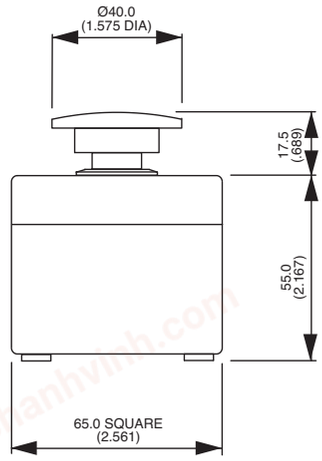

Description	Part No
Emergency stop	**A01ESSP354B + PEA01**
Black momentary	**A01MMASP352B + PEA01**
Red momentary	**A01MMBSP352B + PEA01**
Yellow momentary	**A01MMDSP352B + PEA01**
Green momentary	**A01MMESP352B + PEA01**
Blue momentary	**A01MMFSP352B + PEA01**
Black maintained	**A01MXASP352B + PEA01**
Red maintained	**A01MXBSP352B + PEA01**
Yellow maintained	**A01MXDSP352B + PEA01**
Green maintained	**A01MXESP352B + PEA01**
Blue maintained	**A01MXFSP352B + PEA01**

OPTIONS

12A 250V versions or custom printing on mushroom head actuators : contact APEM.

chanhvinh.com

A01 series

Mushroom head pushbutton switches

Panel cut-out Ø 16 (.630)

- **Prominent 24 mm (.944) dia. or optional 40 mm (1.575) dia. mushroom actuators**
- **Momentary and maintained functions**
  Momentary function versions are unmarked.
  Maintained function versions are twist release (arrows indicate direction of twist)
- **Various coloured mushroom actuators are available.**

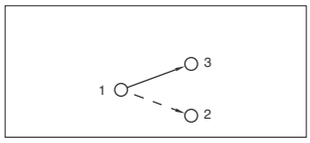



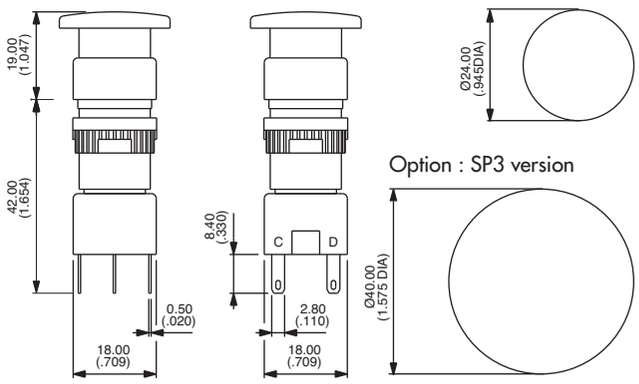

❶

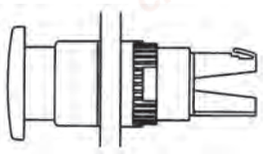

❷

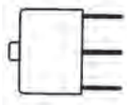

Operator

Actuator	Description	Part No
24mmØ	Black momentary	**A01MMA**
24mmØ	Red momentary	**A01MMB**
24mmØ	Yellow momentary	**A01MMD**
24mmØ	Green momentary	**A01MME**
24mmØ	Blue momentary	**A01MMF**
24mmØ	Black maintained	**A01MXA**
24mmØ	Red maintained	**A01MXB**
24mmØ	Yellow maintained	**A01MXD**
24mmØ	Green maintained	**A01MXE**
24mmØ	Blue maintained	**A01MXF**
40mmØ	Black momentary	**A01MMA SP3**
40mmØ	Red momentary	**A01MMB SP3**
40mmØ	Yellow momentary	**A01MMD SP3**
40mmØ	Green momentary	**A01MME SP3**
40mmØ	Blue momentary	**A01MMF SP3**
40mmØ	Black maintained	**A01MXA SP3**
40mmØ	Red maintained	**A01MXB SP3**
40mmØ	Yellow maintained	**A01MXD SP3**
40mmØ	Green maintained	**A01MXE SP3**
40mmØ	Blue maintained	**A01MXF SP3**

Switch block

No of poles	Part No
Single pole	**A0151B**
Double pole	**A0152B**
Three pole	**A0155B**
Four pole	**A0153B**

G

chanhvinh.com

A1-A01 series

Industrial controls

Accessories

FLUSH MOUNTING BEZELS

Dark grey plastic material - supplied with sealing washer



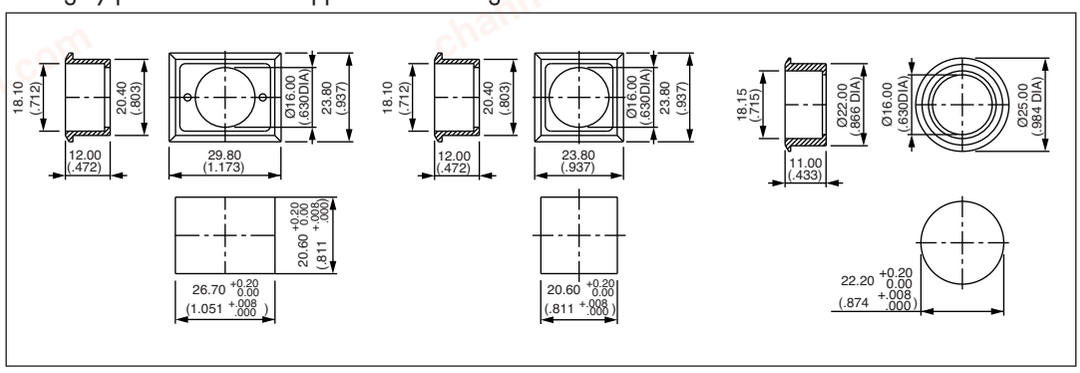

Rectangular **A01FM1** Square **A01FM** Round **A01FM2**

FLUSH MOUNTING BEZELS

Metal versions



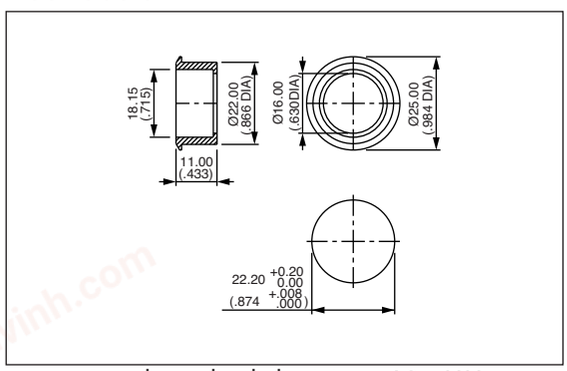

Round, anodised aluminium **A01FMM**
Round, matt black **A01FMMG**

PCB SOCKET



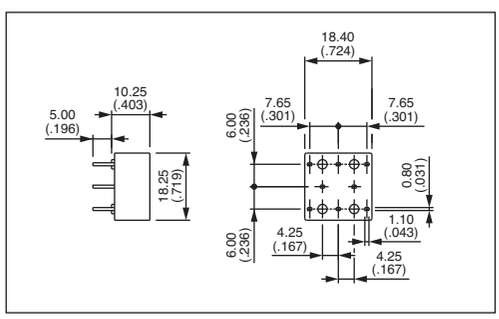

Single pole, non illuminated	**A01PC1**
Double pole, non illuminated	**A01PC2**
Single pole, illuminated	**A01PC3**
Double pole, illuminated	**A01PC4**
Indicator	**A01PC5**
Single pole, E-stop	**A01PC6**
Double pole, E-stop	**A01PC7**

FLAPGUARDS



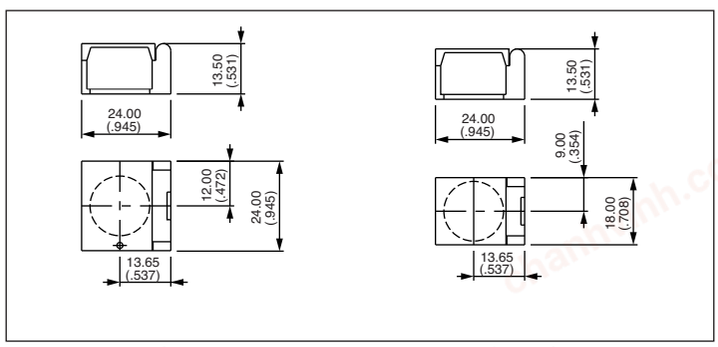

Rectangular **A01FG1** Square/round **A01FG2**

chanhvinh.com

A1-A01 series

Industrial controls

Accessories

METAL GUARDS

→ Slot as alternative to Ø 2 mm hole - Material : 1 mm thick aluminium.



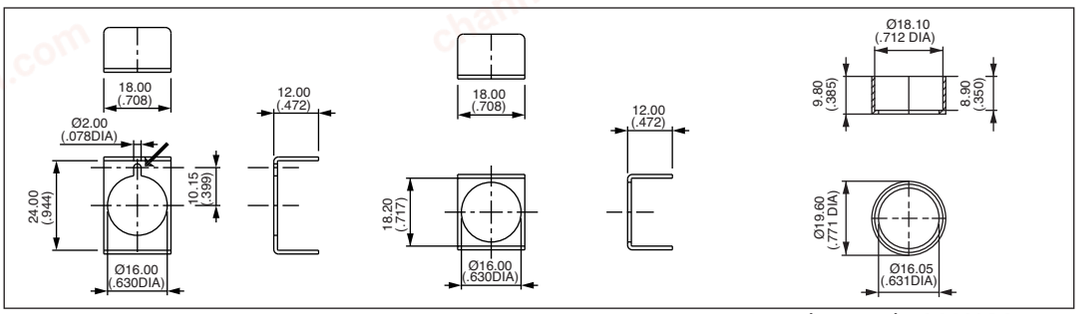

Rectangular **A01MG1** Square **A01MG** Round, natural **A01MG2**
Matt black **A01MG2G**

ANTI ROTATION RING

Recommended to prevent product rotation

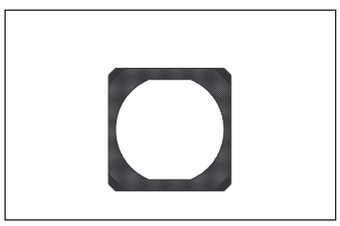

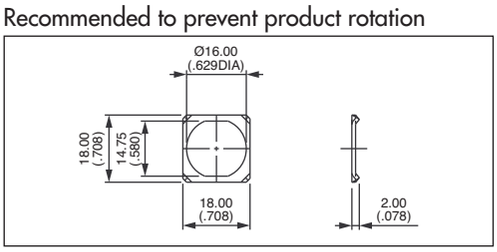

A01LW

SWITCHBLOCK TERMINAL GUARDS



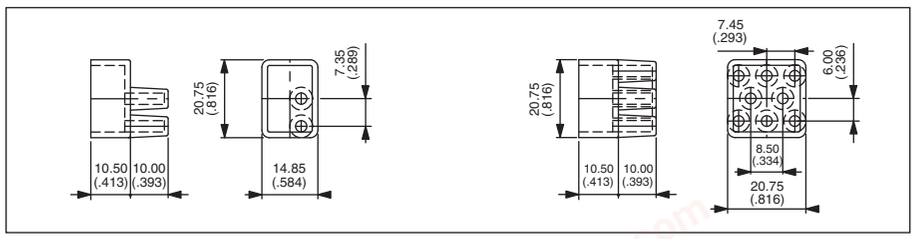

2 way **A01RTC2** 8 way **A01RTC8**

BLANKING PLUGS



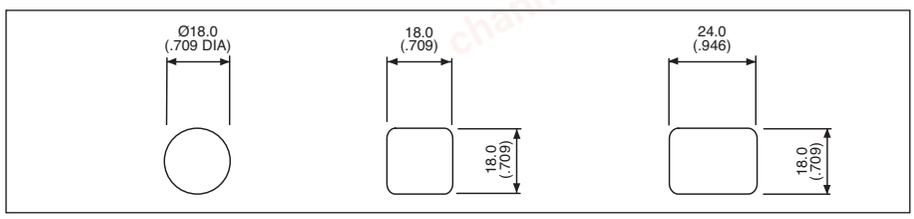

Round **A0133** Square **A0132** Rectangular **A0131**

RESISTOR ASSEMBLY

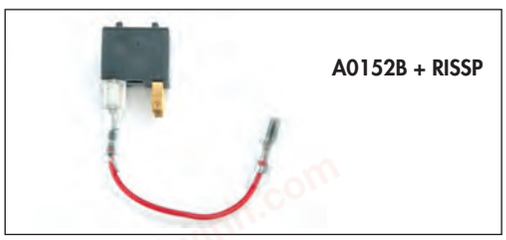

A0152B + RISSP

Resistor assembly - 2 stage illumination

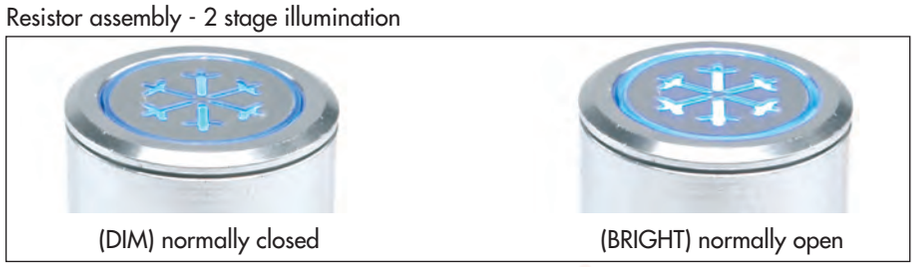

(DIM) normally closed (BRIGHT) normally open

G

chanhvinh.com

A1-A01 series

Industrial controls

Installation - tools

Modular construction / panel mounting

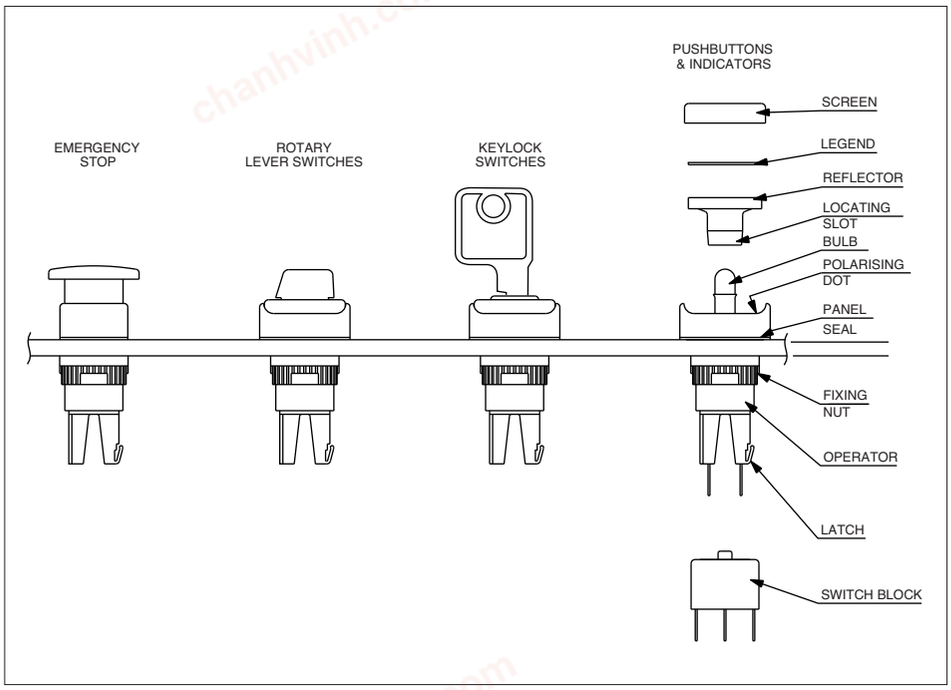

PANEL CUT-OUT

Round & square operators only

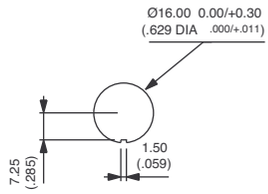

Rectangular operators only

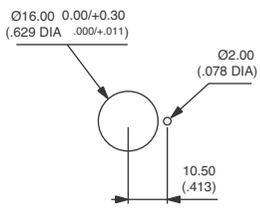

Max. panel thickness : 8 mm (.315)

PANEL MOUNTING ASSEMBLY

- Drill/punch hole shaped as above.
- Assemble front operator through hole, fit fixing nut and tighten to a maximum torque of 0,8Nm using tool No 30-0001.
- Wire chosen switch block as required and slide onto operator until latch engages.
- Fit bulb if required using tool No 30-0002.
- Snap screen onto reflector assembly with legend in between if required and snap onto front operator TAKING CARE TO LINE UP THE LOCATING SLOT WITH THE POLARISING DOT, and not to damage the seal.

TO REMOVE BULB

Remove reflector/screen assembly. Use the bulb extractor 30-0002 to remove the bulb.

SWITCH BLOCK

To assemble switch block to front operator, TAKE CARE TO LINE UP SWITCH BLOCK WITH FRONT OPERATOR. Once in position, slide on to front operator. NB. : Ensure latch is fully engaged correctly onto the switch block.

To remove switch block, depress the latch and slide the switch block off the operator.

FIXING NUT KEY

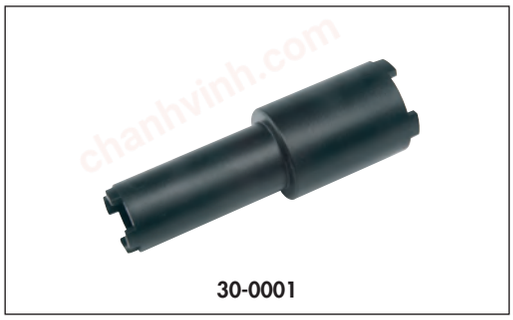

30-0001

BULB REMOVER

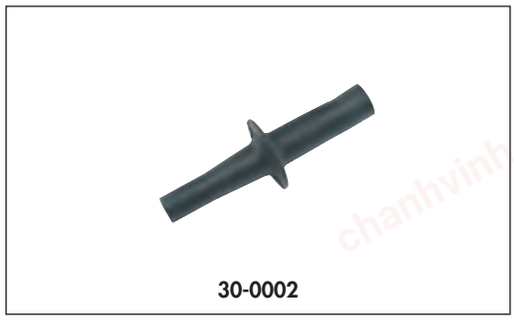

30-0002

chanhvinh.com

A02 series

Illuminated or non-illuminated pushbutton switches

Panel cut-out Ø 22 (.866) or 29,5 x 21,5 (1.160x.846)

A pushbutton assembly requires :
screen + lamp (if illuminated) + operator + one or two switch blocks.
To order these elements, select desired model numbers from tables below.
Example : IP65 illuminated rectangular maintained pushbutton, switch block with 2 N.O. contacts, red screen and 12V red LED assembly = A0261B, A0242J1, A0201X and A02503UL.

UG1410A

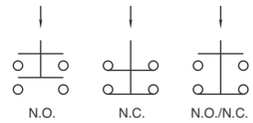

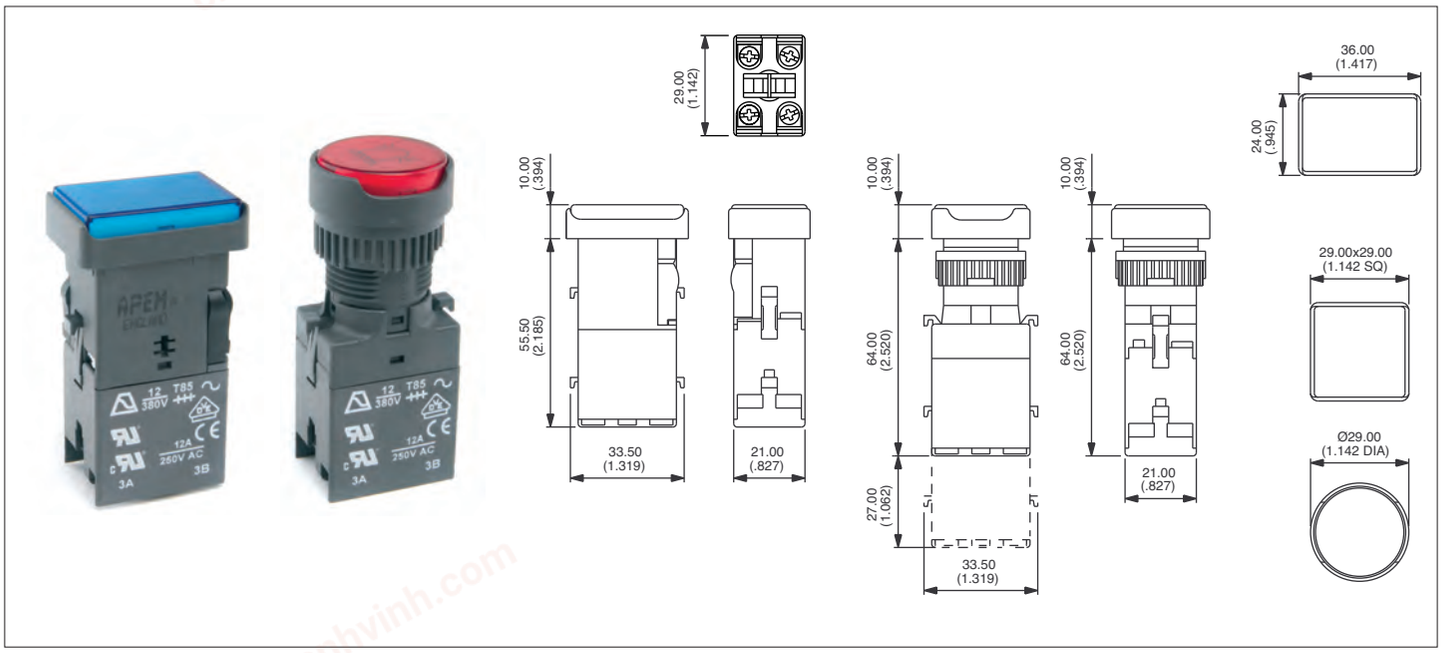

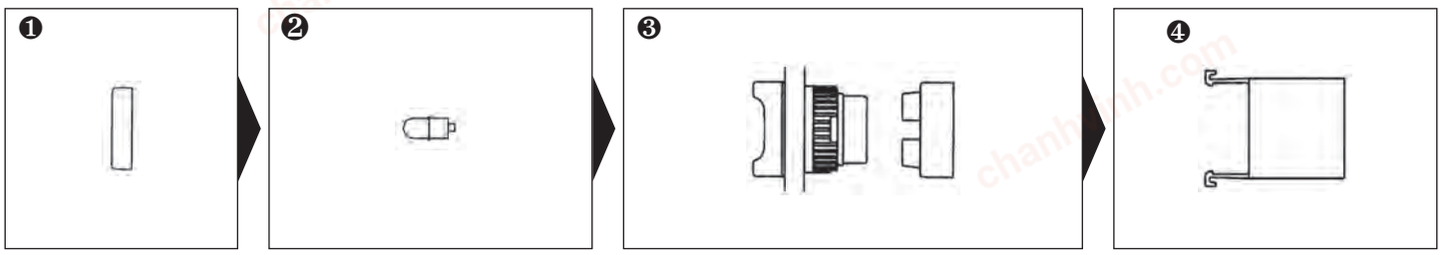

Screen

Bezel	Colour	Part No
▭	black	**A0261A**
▭	red	**A0261B**
▭	amber	**A0261C**
▭	yellow	**A0261D**
▭	green	**A0261E**
▭	blue	**A0261F**
▭	clear	**A0261G**
▭	white	**A0261J**
□	black	**A0262A**
□	red	**A0262B**
□	amber	**A0262C**
□	yellow	**A0262D**
□	green	**A0262E**
□	blue	**A0262F**
□	clear	**A0262G**
□	white	**A0262J**
○	black	**A0263A**
○	red	**A0263B**
○	amber	**A0263C**
○	yellow	**A0263D**
○	green	**A0263E**
○	blue	**A0263F**
○	clear	**A0263G**
○	white	**A0263J**

Lamp

Lamp	Voltage	Part No
Filament	6.3V	**A0141A**
Filament	14V	**A0141B**
Filament	28V	**A0141C**
Filament	36V	**A0141D**
Filament	48V	**A0141E**
Filament	60V	**A0141F**
Neon	110V	**A0143G**
Neon	220V	**A0143H**
LED	6V red	**A0142L1**
LED	6V green	**A0142L2**
LED	6V amber	**A0142L3**
LED	12V red	**A0142M1**
LED	12V green	**A0142M2**
LED	12V amber	**A0142M3**
LED	12V blue	**A0142M4**
LED	12V white	**A0142M5**
LED	24V red	**A0142N1**
LED	24V green	**A0142N2**
LED	24V amber	**A0142N3**
LED	24V blue	**A0142N4**
LED	24V white	**A0142N5**
LED	48V red	**A0142P1**
LED	48V green	**A0142P2**
LED	48V amber	**A0142P3**

Operator

Bezel	Description	Lamp type	Part No
▭	Illum, momentary	Lamp/LED	**A0201Y**
▭	Illum, maintained	Lamp/LED	**A0201X**
▭	Non-illum, maintained		**A0203X**
▭	Non-illum, momentary		**A0203Y**
□	Illum, momentary	Lamp/LED	**A0204Y**
□	Illum, maintained	Lamp/LED	**A0204X**
□	Non-illum, momentary		**A0206Y**
□	Non-illum, maintained		**A0206X**
○	Illum, momentary	Lamp/LED	**A0207Y**
○	Illum, maintained	Lamp/LED	**A0207X**
○	Non-illum, momentary		**A0209Y**
○	Non-Illum, maintained		**A0209X**

UNSEALED SWITCHES **(IP40)** :
add "01" to end of **operator** model number.

Switch block

Contacts	Part No
1 N.O.	**A02501**
1 N.C.	**A02502**
2 N.O.	**A02503**
2 N.C.	**A02504**
1 N.O./1 N.C.	**A02505**

Second switch block

Contacts	Part No
1 N.O.	**A02506**
1 N.C.	**A02507**
2 N.O.	**A02508**
2 N.C.	**A02509**
1 N.O./1 N.C.	**A02510**

To achieve 3 or 4 pole switching, add second switch block, from above table.

SCREEN ENGRAVING / INSERTABLE LEGENDS : contact APEM.

Bezel: ▭ rectangular, □ square, ○ round, 'Illum' - illuminated, 'Non-illum' - non illuminated

The company reserves the right to change specifications without notice.

chanhvinh.com

A02 series

Metal bezel pushbutton switches and indicators

Panel cut-out Ø 22 (.866)

A pushbutton assembly requires :
screen + lamp (if illuminated) + operator + one or two switch blocks.
An indicator assembly requires : screen + lamp + operator
To order these elements, select desired model numbers from tables below.
Example : IP65 illuminated metal bezel maintained pushbutton, switch block with 2 N.O. contacts, red screen and 12V red LED assembly = A0263B, A0244J1, A0211X and A02503UL.

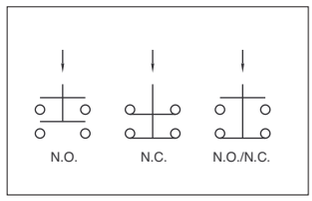

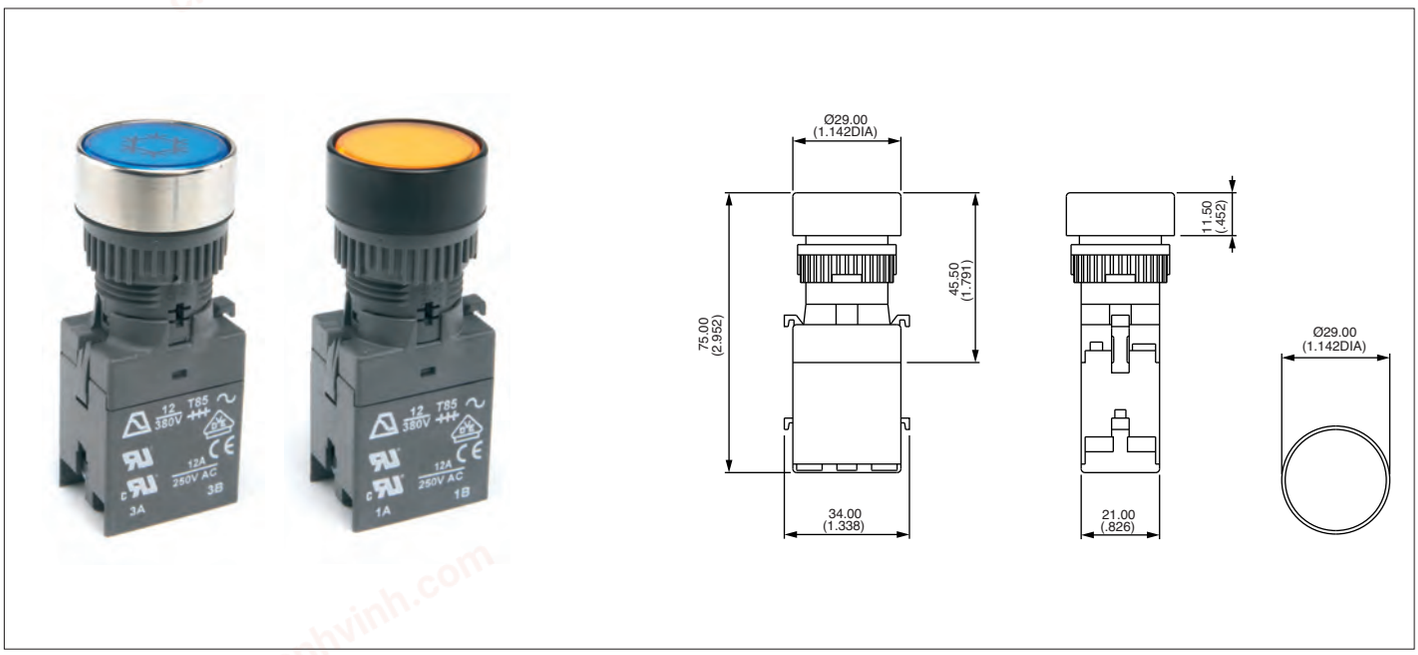

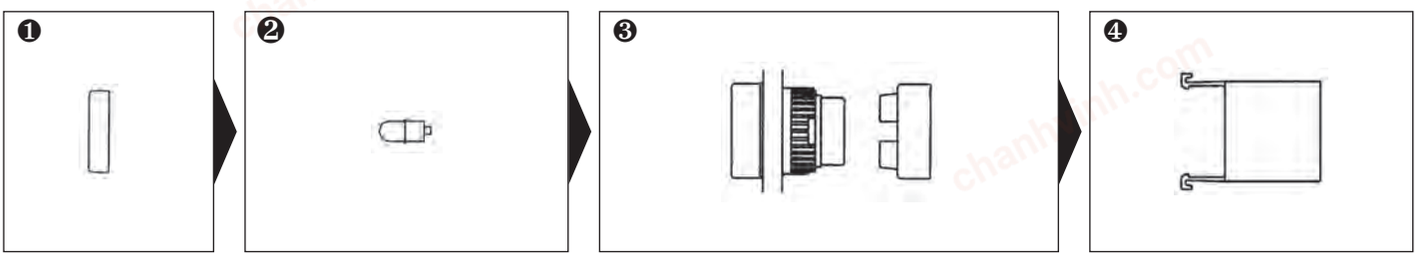

Screen

Bezel	Colour	Part No
○	black	**A0263A**
○	red	**A0263B**
○	amber	**A0263C**
○	yellow	**A0263D**
○	green	**A0263E**
○	blue	**A0263F**
○	clear	**A0263G**
○	white	**A0263J**

Lamp

Lamp	Voltage	Part No
Filament	6.3V	**A0141A**
Filament	14V	**A0141B**
Filament	28V	**A0141C**
Filament	36V	**A0141D**
Filament	48V	**A0141E**
Filament	60V	**A0141F**
Neon	110V	**A0143G**
Neon	220V	**A0143H**
LED	6V red	**A0142L1**
LED	6V green	**A0142L2**
LED	6V amber	**A0142L3**
LED	12V red	**A0142M1**
LED	12V green	**A0142M2**
LED	12V amber	**A0142M3**
LED	12V blue	**A0142M4**
LED	12V white	**A0142M5**
LED	24V red	**A0142N1**
LED	24V green	**A0142N2**
LED	24V amber	**A0142N3**
LED	24V blue	**A0142N4**
LED	24V white	**A0142N5**
LED	48V red	**A0142P1**
LED	48V green	**A0142P2**
LED	48V amber	**A0142P3**

Operator

Bezel	Description	Lamp type	Part No
○	Illum, momentary	Lamp/LED	**A0210Y**
○	Illum, maintained	Lamp/LED	**A0210X**
○	Non-illum, momentary		**A0212Y**
○	Non-illum, maintained		**A0212X**
○	Illum, indicator	Lamp/LED	**A0277**

Std bezel material : nickel plated brass.
For optional black finish, add "G" to the end of **operator** model number.

***UNSEALED SWITCHES* (IP40)** :
add "01" to end of **operator** model number.

Switch block

Contacts	Part No
1 N.O.	**A02501**
1 N.C.	**A02502**
2 N.O.	**A02503**
2 N.C.	**A02504**
1 N.O./1 N.C.	**A02505**

Second switch block

Contacts	Part No
1 N.O.	**A02506**
1 N.C.	**A02507**
2 N.O.	**A02508**
2 N.C.	**A02509**
1 N.O./1 N.C.	**A02510**

To achieve 3 or 4 pole switching, add second switch block, from above table.

SCREEN ENGRAVING / INSERTABLE LEGENDS : contact APEM.

Bezel: ▭ rectangular, ▢ square, ○ round, 'Illum' - illuminated, 'Non-illum' - non illuminated

chanhvinh.com

A02 series

Flush mounting pushbutton switches and indicators

Panel cut-out Ø 30 (1.181)

A pushbutton assembly requires :
screen + lamp (if illuminated) + operator + one or two switch blocks.
An indicator assembly requires : screen + lamp + operator
To order these elements, select desired model numbers from tables below.
Example : IP65 illum. flush mounting maintained pushbutton, switch block with 2 N.O. contacts, red screen and 12V red LED assembly = A0263B, A0244J1, A0213X and A02503UL.

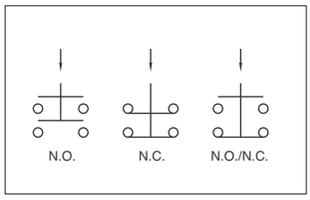



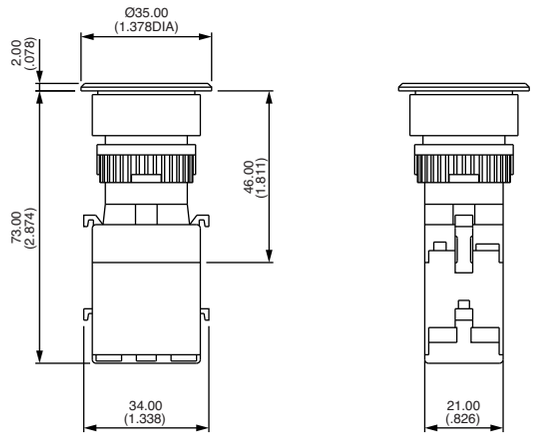

❶ ❷ ❸ ❹

Screen

Bezel	Colour	Part No
○	black	**A0263A**
○	red	**A0263B**
○	amber	**A0263C**
○	yellow	**A0263D**
○	green	**A0263E**
○	blue	**A0263F**
○	clear	**A0263G**
○	white	**A0263J**

Lamp

Lamp	Voltage	Part No
Filament	6.3V	**A0141A**
Filament	14V	**A0141B**
Filament	28V	**A0141C**
Filament	36V	**A0141D**
Filament	48V	**A0141E**
Filament	60V	**A0141F**
Neon	110V	**A0143G**
Neon	220V	**A0143H**
LED	6V red	**A0142L1**
LED	6V green	**A0142L2**
LED	6V amber	**A0142L3**
LED	12V red	**A0142M1**
LED	12V green	**A0142M2**
LED	12V amber	**A0142M3**
LED	12V blue	**A0142M4**
LED	12V white	**A0142M5**
LED	24V red	**A0142N1**
LED	24V green	**A0142N2**
LED	24V amber	**A0142N3**
LED	24V blue	**A0142N4**
LED	24V white	**A0142N5**
LED	48V red	**A0142P1**
LED	48V green	**A0142P2**
LED	48V amber	**A0142P3**

Operator

Bezel	Description	Lamp type	Part No
○	Illum, momentary	Lamp/LED	**A0214Y**
○	Illum, maintained	Lamp/LED	**A0214X**
○	Non-illum, momentary		**A0215Y**
○	Non-illum, maintained		**A0215X**
○	Illum, indicator	Lamp/LED	**A02791**

Std bezel material : silver anodised aluminium.
For optional black anodised aluminium, add "G" to end of **operator** model number.

UNSEALED SWITCHES **(IP40)** :
add "01" to end of **operator** model number.

Switch block

Contacts	Part No
1 N.O.	**A02501**
1 N.C.	**A02502**
2 N.O.	**A02503**
2 N.C.	**A02504**
1 N.O./1 N.C.	**A02505**

Second switch block

Contacts	Part No
1 N.O.	**A02506**
1 N.C.	**A02507**
2 N.O.	**A02508**
2 N.C.	**A02509**
1 N.O./1 N.C.	**A02510**

To achieve 3 or 4 pole switching, add second switch block, from above table.

SCREEN ENGRAVING / INSERTABLE LEGENDS : contact APEM.

Bezel: ▭ rectangular, □ square, ○ round, 'Illum' - illuminated, 'Non-illum' - non illuminated

chanhvinh.com

A02 series

Indicators

Panel cut-out Ø 22 (.866) or 29,5 x 21,5 (1.160x.846)

An indicator assembly requires :
Screen + lamp, LED or LED assembly + operator.
To order these elements, select desired model numbers from tables below.
Example : IP65 rectangular indicator with red screen and 12V red LED assembly = A0261B, A0242J1 and A0272.

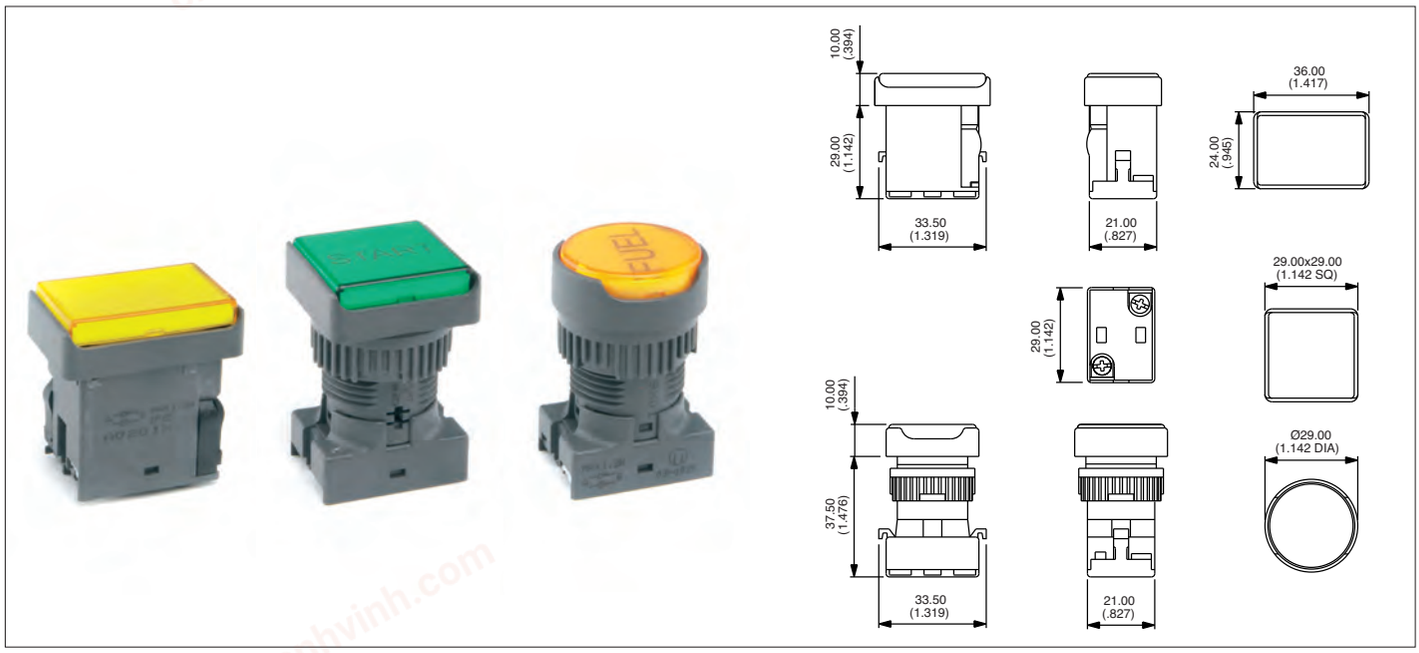

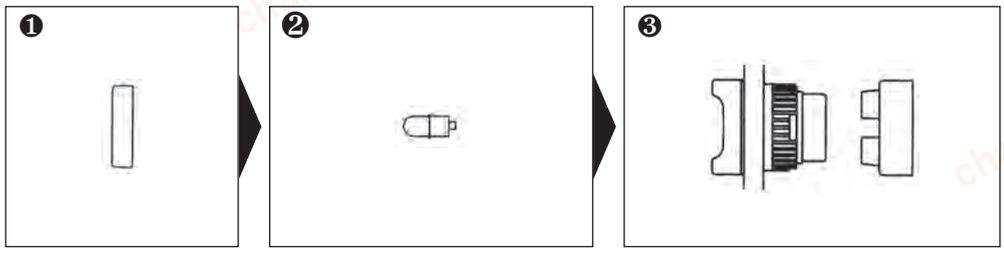

Screen

Bezel	Colour	Part No
▭	black	**A0261A**
▭	red	**A0261B**
▭	amber	**A0261C**
▭	yellow	**A0261D**
▭	green	**A0261E**
▭	blue	**A0261F**
▭	clear	**A0261G**
▭	white	**A0261J**
□	black	**A0262A**
□	red	**A0262B**
□	amber	**A0262C**
□	yellow	**A0262D**
□	green	**A0262E**
□	blue	**A0262F**
□	clear	**A0262G**
□	white	**A0262J**
○	black	**A0263A**
○	red	**A0263B**
○	amber	**A0263C**
○	yellow	**A0263D**
○	green	**A0263E**
○	blue	**A0263F**
○	clear	**A0263G**
○	white	**A0263J**

Lamp

Lamp	Voltage	Part No
Filament	6.3V	**A0141A**
Filament	14V	**A0141B**
Filament	28V	**A0141C**
Filament	36V	**A0141D**
Filament	48V	**A0141E**
Filament	60V	**A0141F**
Neon	110V	**A0143G**
Neon	220V	**A0143H**
LED	6V red	**A0142L1**
LED	6V green	**A0142L2**
LED	6V amber	**A0142L3**
LED	12V red	**A0142M1**
LED	12V green	**A0142M2**
LED	12V amber	**A0142M3**
LED	12V blue	**A0142M4**
LED	12V white	**A0142M5**
LED	24V red	**A0142N1**
LED	24V green	**A0142N2**
LED	24V amber	**A0142N3**
LED	24V blue	**A0142N4**
LED	24V white	**A0142N5**
LED	48V red	**A0142P1**
LED	48V green	**A0142P2**
LED	48V amber	**A0142P3**

Operator

Bezel	Description	Lamp type	Part No
▭	Indicator	Lamp/LED	**A0271**
□	Indicator	Lamp/LED	**A0273**
○	Indicator	Lamp/LED	**A0275**

***UNSEALED INDICATORS* (IP40)** :
add "01" to end of **operator** model number.

SCREEN ENGRAVING / INSERTABLE LEGENDS : contact APEM.

Bezel: ▭ rectangular, □ square, ○ round,

chanhvinh.com

A02 series

Rotary switches

Panel cut-out Ø 22 (.866)

A rotary lever assembly requires :
operator + one or two switch blocks.
To order these elements, select desired model numbers from tables below.
Example : IP65 square 2 position maintained rotary switch with long lever, clockwise rotation, switch block with 2 N.O. contacts = A029107 and A02503UL.

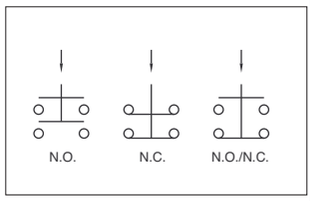

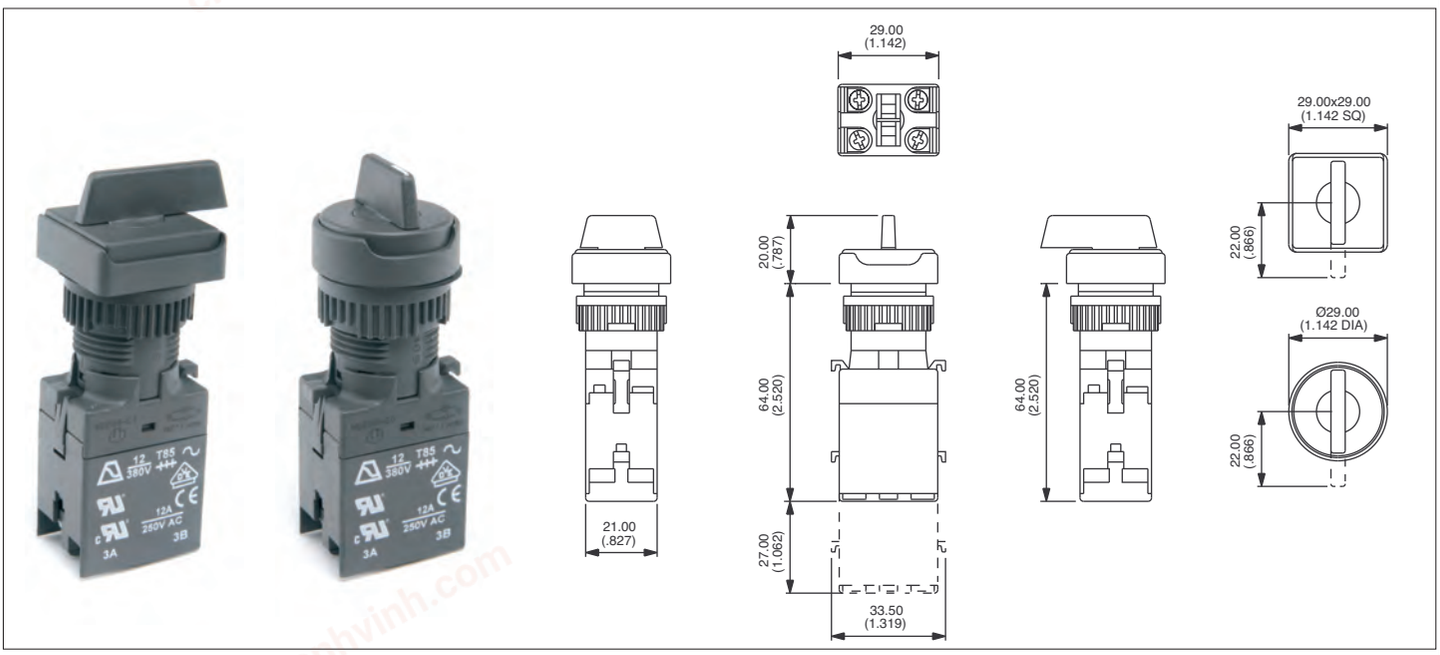

❶

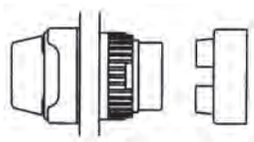

❷

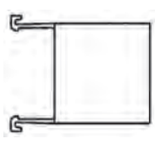

Operator

Bezel	Description	Short lever	Long lever
□	2 pos. maintained	**A029207**	**A029107•**
□	2 pos. momentary	**A029208**	**A029108•**
□	3 pos. maintained	**A029203**	**A029103**
□	3 pos. momentary	**A029204**	**A029104**
□	3 pos. mainL, momR	**A029205**	**A029105**
□	3 pos. momL, mainR	**A029206**	**A029106**
○	2 pos. maintained	**A029407**	**A029307•**
○	2 pos. momentary	**A029408**	**A029308•**
○	3 pos. maintained	**A029403**	**A029303**
○	3 pos. momentary	**A029404**	**A029304**
○	3 pos. mainL, momR	**A029405**	**A029305**
○	3 pos. momL, mainR	**A029406**	**A029306**

OPTION
To specify **flush mounting (Ø 30 mm) option**, add "FM" to the end of the part number (for round operators only).
Example : A029407FM.

Switch block

Contacts	Part No
1 N.O.	**A02501**
1 N.C.	**A02502**
2 N.O.	**A02503**
2 N.C.	**A02504**
1 N.O./1 N.C.	**A02505**

Second switch block

Contacts	Part No
1 N.O.	**A02506**
1 N.C.	**A02507**
2 N.O.	**A02508**
2 N.C.	**A02509**
1 N.O./1 N.C.	**A02510**

To achieve 3 or 4 pole switching, add second switch block, from above table.

Lever positions

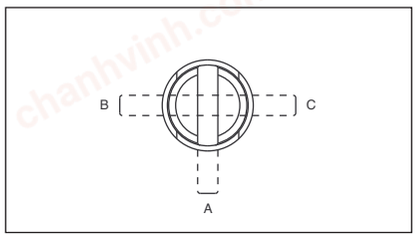

• Lever Rotation - 2 position switches

The model numbers shown are for switches with clockwise lever rotation.
For anticlockwise rotation, replace :

07	with	**01**
08	with	**02**

at the end of the model number.

Optional engraving on lever end



To order, add "WL" to the end of the part No.
Example : A029407WL.

Bezel: □ square, ○ round,

chanhvinh.com

A02 series

Keylock switches

Panel cut-out Ø 22 or 29,5 x 21,5

A keyswitch assembly requires :
operator + one or two switch blocks.
To order these elements, select desired model numbers from tables below.
Example : IP65 square 2 position keyswitch, clockwise rotation, switch block with 2 N.O. contacts = A028220 and A02503UL.

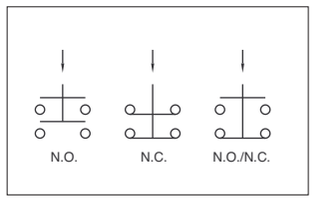

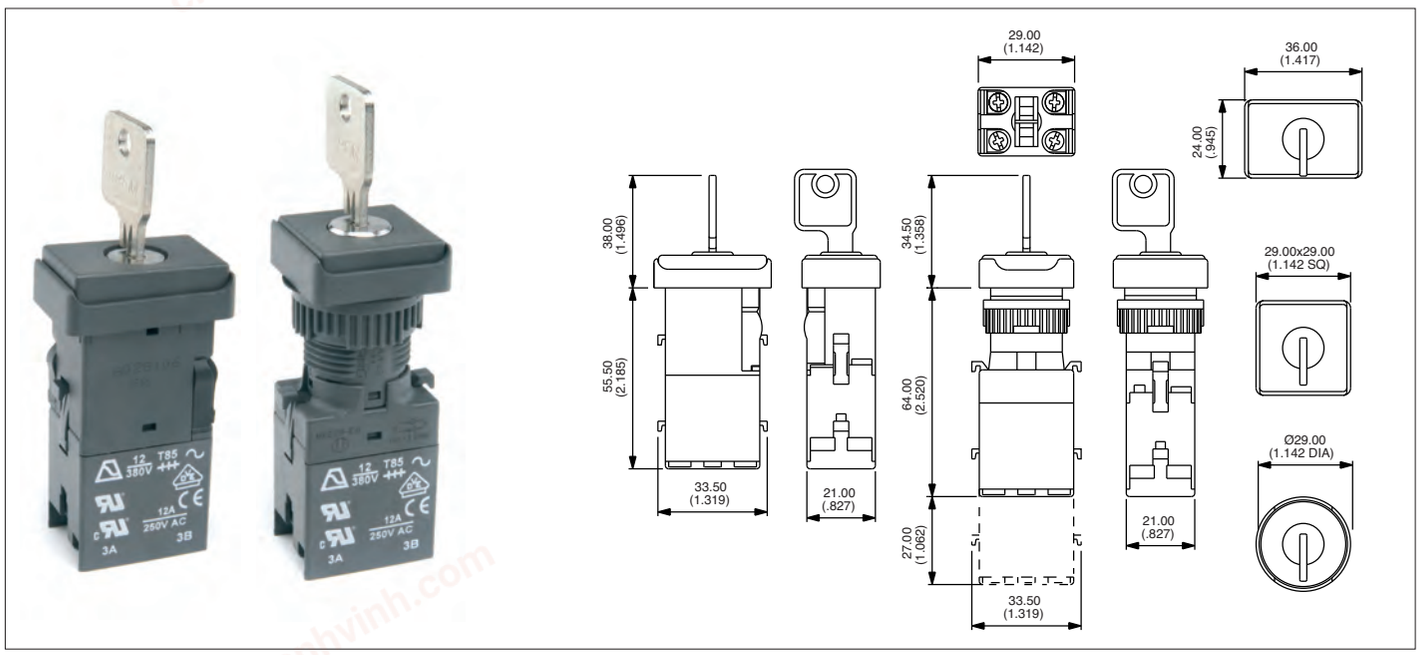

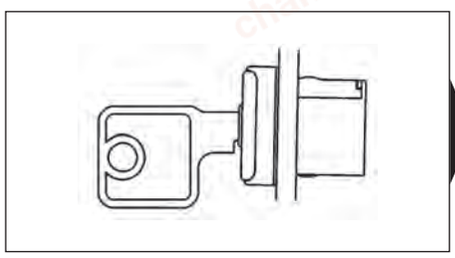

Operator

Bezel	Description	Part No	Key removable in positions
▭	2 pos. maintained	**A028120•**	A-B
▭	2 pos. momentary	**A028119•**	A
▭	3 pos. maintained	**A028105**	A-B-C
▭	3 pos. momentary	**A028106**	A
▭	3 pos. mainL, momR	**A028107**	A-B
▭	3 pos. momL, mainR	**A028108**	A-C
□	2 pos. maintained	**A028220•**	A-B
□	2 pos. momentary	**A028219•**	A
□	3 pos. maintained	**A028205**	A-B-C
□	3 pos. momentary	**A028206**	A
□	3 pos. mainL, momR	**A028207**	A-B
□	3 pos. momL, mainR	**A028208**	A-C
○	2 pos. maintained	**A028320•**	A-B
○	2 pos. momentary	**A028319•**	A
○	3 pos. maintained	**A028305**	A-B-C
○	3 pos. momentary	**A028306**	A
○	3 pos. mainL, momR	**A028307**	A-B
○	3 pos. momL, mainR	**A028308**	A-C

OPTION
To specify **flush mounting (Ø 30 mm) option**, add "FM" to the end of the part number (for round operators only). Example : A028320FM.

Bezel: ▭ rectangular, □ square, ○ round,

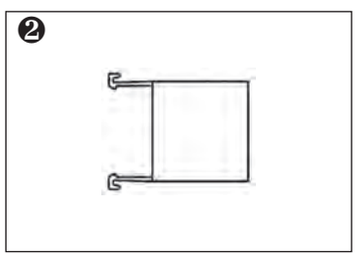

Switch block

Contacts	Part No
1 N.O.	**A02501**
1 N.C.	**A02502**
2 N.O.	**A02503**
2 N.C.	**A02504**
1 N.O./1 N.C.	**A02505**

Second switch block

Contacts	Part No
1 N.O.	**A02506**
1 N.C.	**A02507**
2 N.O.	**A02508**
2 N.C.	**A02509**
1 N.O./1 N.C.	**A02510**

To achieve 3 or 4 pole switching, add second switch block, from above table

Key positions

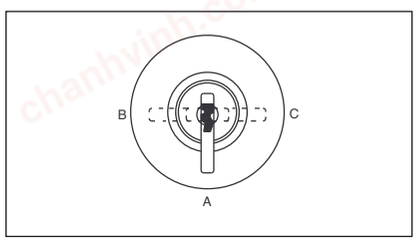

• **Key Rotation - 2 position switches**

The model numbers shown are for switches with clockwise key rotation.
For anticlockwise rotation, replace:

20	with	**01**
19	with	**02**

at the end of the model number

• 2 standard keys are supplied.

• 20 key barrel types available.

Non-removable key positions : contact APEM.

chanhvinh.com

A02 series

Emergency stop switches

Panel cut-out Ø 22 (.866)

- **Prominent 40 mm (1.575) dia. red mushroom actuator**
- **Highly reliable positive break switch**
- **Push to shut off switch, twist to reset to ON**

An emergency stop switch assembly requires : operator + switch block.
To order, specify with single pole or double pole positive break switch block.

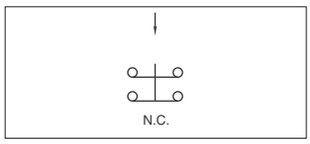

General specifications

- Mechanical life : 6.050 cycles (6 cycles per minute)
- Operating force : 20 N
- Operating temperature : -20°C to +85°C
- Degree of environ. protection (IEC529) : IP65 front of panel, IP40 back of panel
- Switch terminals : M3 screws - wire 2x0.75mm² max.

Electrical specifications

- Current/voltage rating : 2,5A 380VAC AC-15
- Contact gap : > 3 mm (.118)
- Dielectric strength : 2.500V
- Electrical life : 6.050 cycles





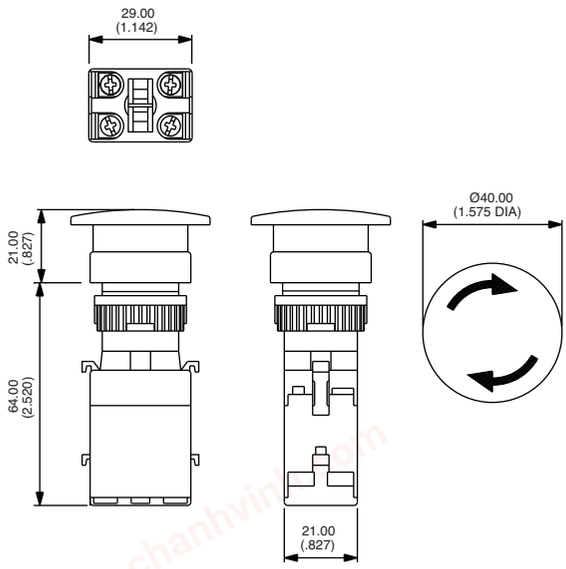

❶

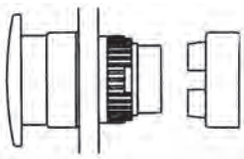

❷

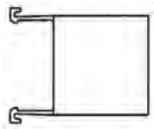

Accessory



90 mm Ø Self Adhesive Label

Description	Part No
Yellow label with text	**A02YL1**
Yellow label	**A02YL2**

Operator

Bezel	Description	Part No
	Emergency stop	**A02ES**

Switch block

No of poles	Part No
Double pole	**A02511**
Single pole	**A02512**

EMERGENCY STOP SWITCH ENCLOSURE

To order the Emergency Stop Switch in the Plastic Enclosure (94 x 94 x 81 mm) with a 2 pole Positive Break Switch Block and Emergency Stop label, use Part number : **A02PE2L.**

G

chanhvinh.com

A02 series

Mushroom head pushbutton switches

Panel cut-out Ø 22 (.866)

- **Prominent 40 mm (1.575) dia. mushroom actuator or optional 26 mm (1.024) actuator**
- **Momentary and maintained functions**
  Momentary function versions are unmarked
  Maintained function versions are twist to release (arrows indicate direction of twist)
- **Various coloured mushroom actuators are available**

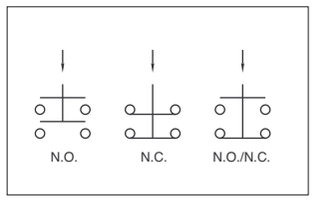

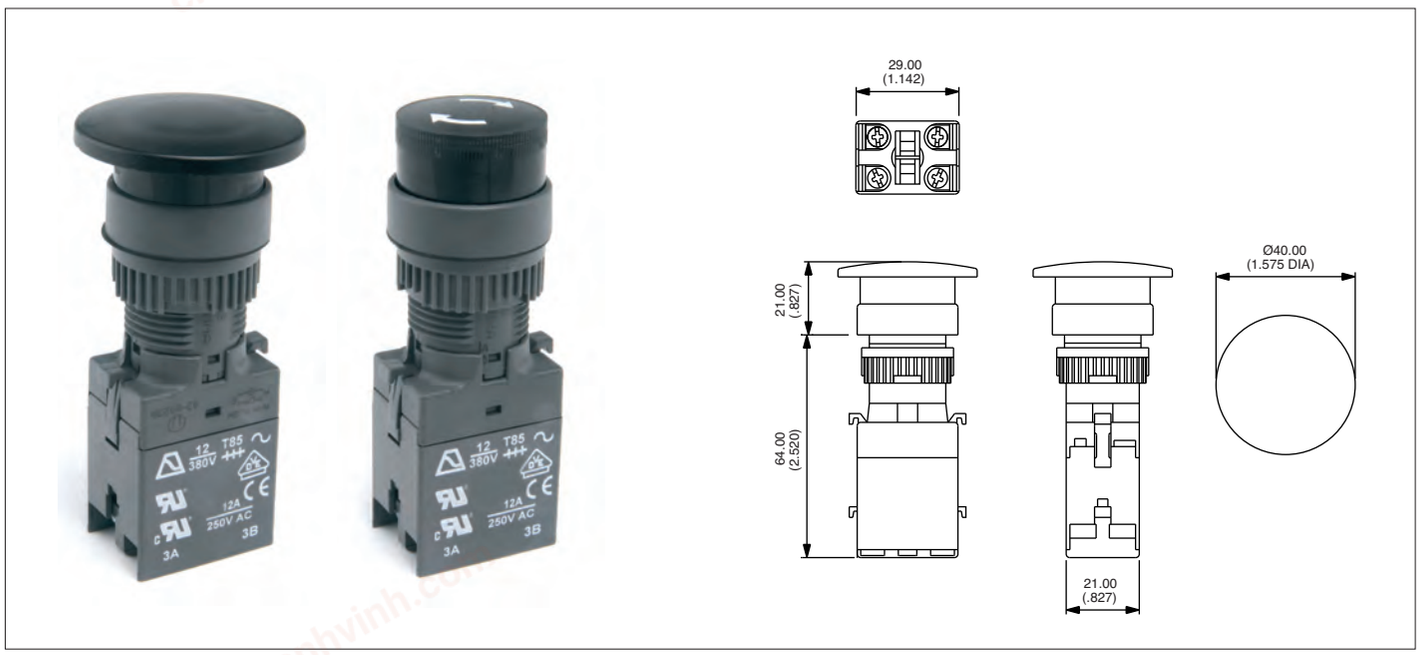

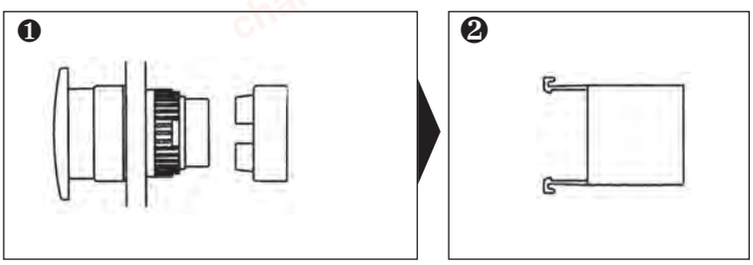

Operator

Bezel	Description	Part No
○	Black momentary	**A02MMA**
○	Red momentary	**A02MMB**
○	Yellow momentary	**A02MMD**
○	Green momentary	**A02MME**
○	Blue momentary	**A02MMF**
○	Black maintained	**A02MXA**
○	Red maintained	**A02MXB**
○	Yellow maintained	**A02MXD**
○	Green maintained	**A02MXE**
○	Blue maintained	**A02MXF**

OPTION
For optional **reduced (Ø 26 mm)** mushroom head operators : contact APEM.

Switch block

Contacts	Part No
1 N.O.	**A02501**
1 N.C.	**A02502**
2 N.O.	**A02503**
2 N.C.	**A02504**
1 N.O./1 N.C.	**A02505**

Second switch block

Contacts	Part No
1 N.O.	**A02506**
1 N.C.	**A02507**
2 N.O.	**A02508**
2 N.C.	**A02509**
1 N.O./1 N.C.	**A02510**

To achieve 3 or 4 pole switching, add second switch block, from above table

Bezel: ○ round

chanhvinh.com

Modular construction / panel mounting

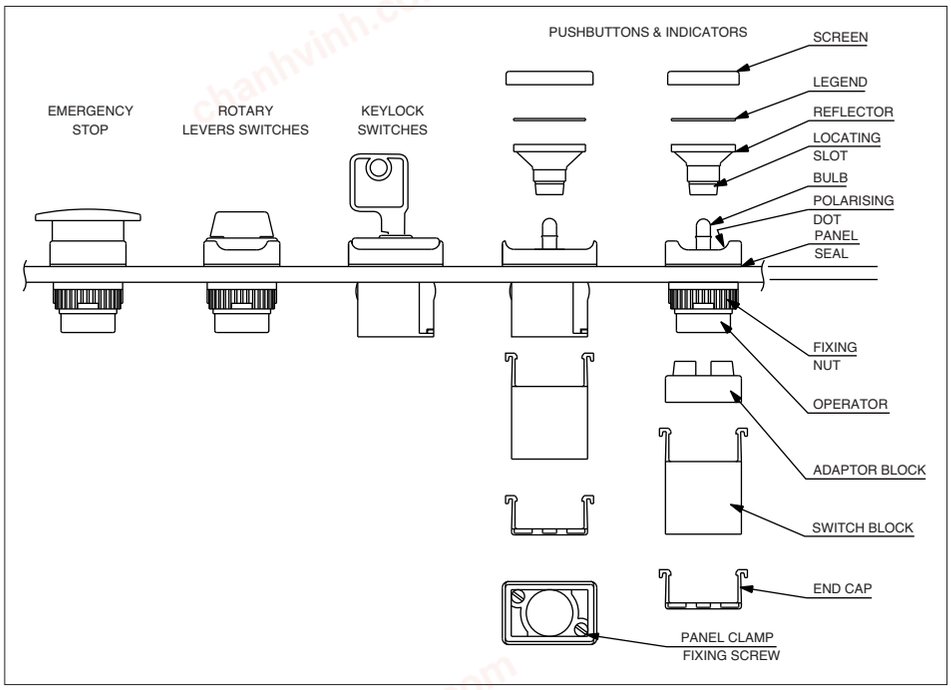

PANEL CUT-OUT

Round & square operators

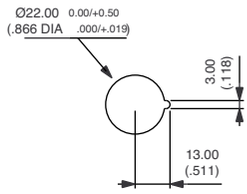

Rectangular operators

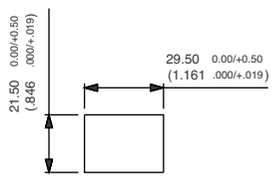

Max. panel thickness : 8 mm (.315)

PANEL MOUNTING ASSEMBLY

- Drill/punch hole in panel as shaped above.
- Assemble front operator through hole and :

a/ *Round & square types* : tighten nut to a maximum torque of 0,8Nm using tool No 30-0001. Snap on adaptor block

b/ *Rectangular types* : tighten two panel fixing screws in front to a maximum torque of 0,06Nm.

- Wire chosen switch block as required and snap onto front operator.
- Snap end cap onto switch block.
- Fit bulb if required using tool No 30-0002.
- Snap screen onto reflector assembly with legend in between if required ans snap into front operator TAKING CARE TO LINE UP THE LOCATING SLOT WITH THE POLARISING DOT, and not to damage the seal.

TO REMOVE BULB

Remove reflector/screen assembly. Use the bulb extractor 30-0002 to remove the bulb.

TO REMOVE SWITCH BLOCK

Lever out latches using small screwdriver taking care not to overbend, and pull off the block from the front operator.

A02 Accessories

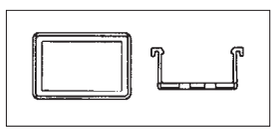

Part No : 14-0005

End cap terminal guard offering unique terminal protection.

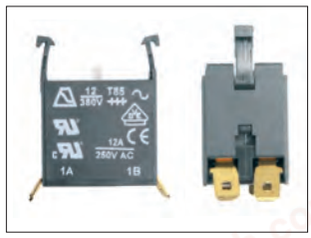

6.35 mm push on tab terminals.
Specify "SP" to the end of the switchblock and operator P/N.
Example : A02503SP.

G

chanhvinh.com

A03 series

Illuminated or non-illuminated pushbutton switches and indicators

Panel cut-out Ø 22 (.866) or 30 (1.181) - Plastic or metal flush mounting bezel

A pushbutton assembly requires :
screen + lamp (if illuminated) + operator + switch block.
To order these elements, select desired model numbers from tables below.
Example : IP65 flush mounting round pushbutton, maintained function, red screen, 12V red LED and single pole switch block = A0314X, A0263B, A0142M1 and A0151BUL.

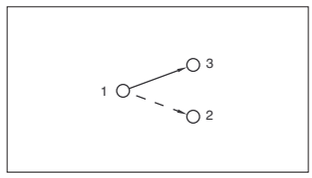

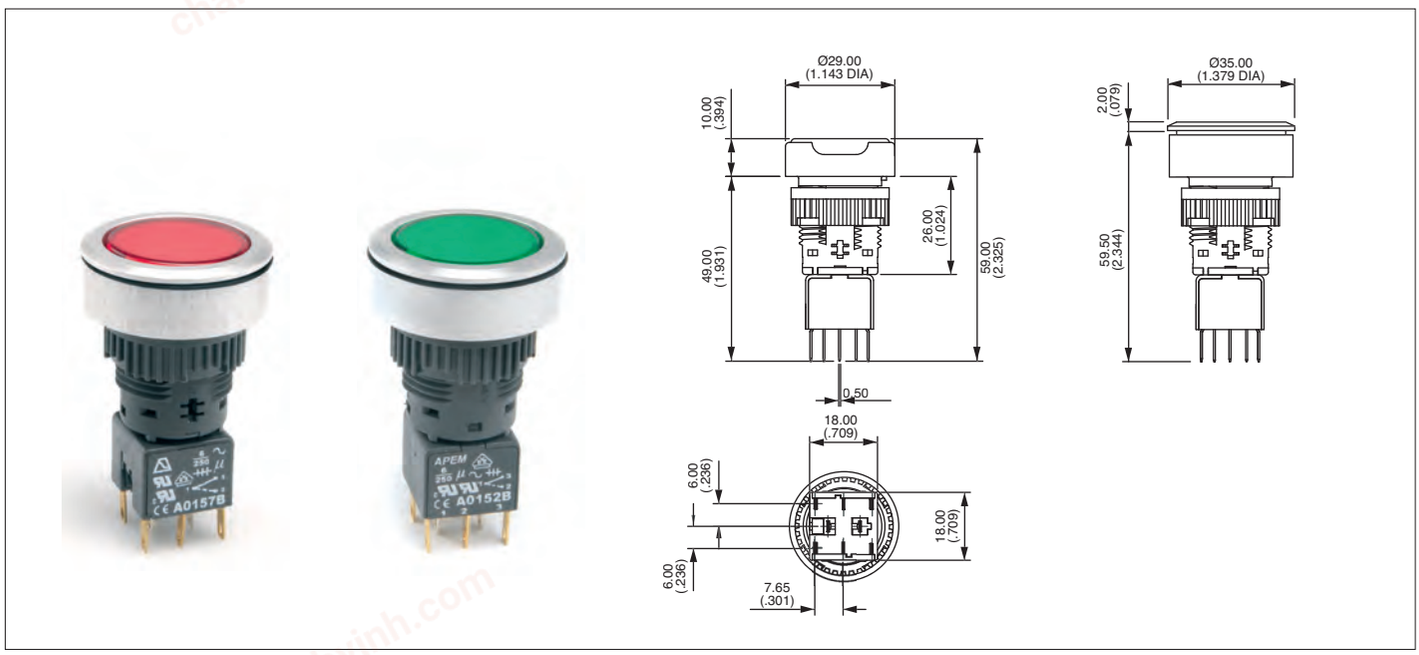

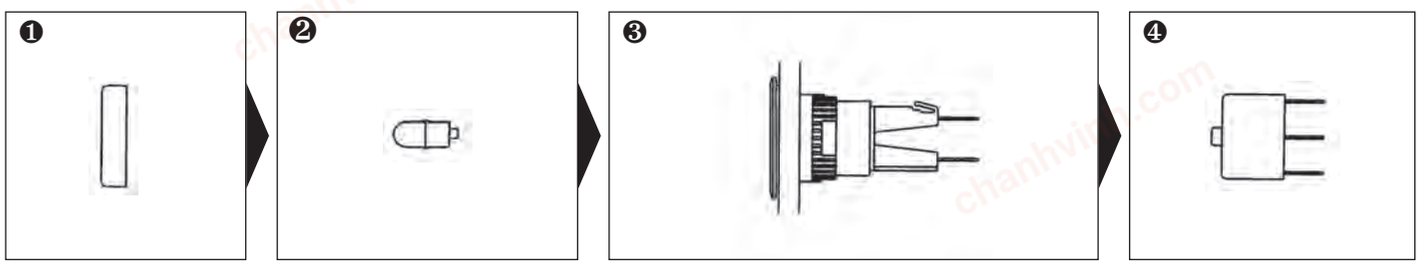

Screen

Bezel	Colour	Part No
○	black	**A0263A**
○	red	**A0263B**
○	amber	**A0263C**
○	yellow	**A0263D**
○	green	**A0263E**
○	blue	**A0263F**
○	clear	**A0263G**
○	white	**A0263J**

Lamp

Lamp	Voltage	Part No
Filament	6.3V	**A0141A**
Filament	14V	**A0141B**
Filament	28V	**A0141C**
Filament	36V	**A0141D**
Filament	48V	**A0141E**
Filament	60V	**A0141F**
Neon	110V	**A0143G**
Neon	220V	**A0143H**
LED	6V red	**A0142L1**
LED	6V green	**A0142L2**
LED	6V amber	**A0142L3**
LED	12V red	**A0142M1**
LED	12V green	**A0142M2**
LED	12V amber	**A0142M3**
LED	12V blue	**A0142M4**
LED	12V white	**A0142M5**
LED	24V red	**A0142N1**
LED	24V green	**A0142N2**
LED	24V amber	**A0142N3**
LED	24V blue	**A0142N4**
LED	24V white	**A0142N5**
LED	48V red	**A0142P1**
LED	48V green	**A0142P2**
LED	48V amber	**A0142P3**

Operator

Bezel	Description	Lamp type	Part No
○	Plastic illum, momentary	Lamp/LED bulb	**A0307Y**
○	Plastic illum, maintained	Lamp/LED bulb	**A0307X**
○	Plastic non-illum, momentary		**A0309Y**
○	Plastic non-illum, maintained		**A0309X**
○	Metal illum, momentary	Lamp/LED bulb	**A0310Y**
○	Metal illum, maintained	Lamp/LED bulb	**A0310X**
○	Metal non-illum, momentary		**A0312Y**
○	Metal non-illum, maintained		**A0312X**
○	F/mount illum, momentary	Lamp/LED bulb	**A0314Y**
	F/mount illum, maintained	Lamp/LED bulb	**A0314X**
○	F/mount non-illum, momentary		**A0315Y**
○	F/mount non-illum, maintained		**A0315X**
○	Plastic indicator		**A0375**
○	Metal indicator		**A0377**
○	F/mount indicator		**A03791**

Switch block

No of poles	Part No
Single pole	**A0151B**
Double pole	**A0152B**
Three pole	**A0155B**
Four pole	**A0153B**

UNSEALED SWITCHES (IP40) :
add "01" to end of **operator** model number.

SCREEN ENGRAVING / INSERTABLE LEGENDS : contact APEM.

Bezel: ○ round. 'Illum' - illuminated, 'Non-illum' - non illuminated