chanhvinh.com

DTSM(G)-6 SERIES

6x6 Surface Mounting Type (Ground Terminal Optional)

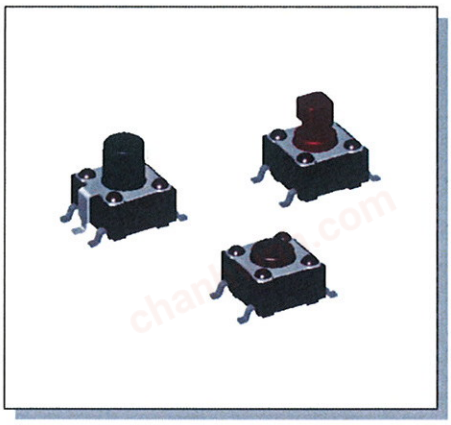

HOW TO ORDER

D	T	S	M		6					

- SMT
- □=Without Ground Terminal / G=S.M.T & Ground Terminal
- Height: 1=4.3mm, 2=5.0mm, 3=7.0mm, 44=7.3mm (SQ.)x2.4mm, 48=7.3mm (SQ.)x2.8mm, 5=9.5mm, 6=13mm
- Operating Force : K=Black, 100gf, N=Brown, 160gf, R=Red, 260gf, S=Salmon, 320gf, Y=Yellow , 520gf
- □=Phosphor Bronze Dome / S=Stainless Steel Dome >Not Available For Halogen Free
- V=RoHS & Lead Free Solderable / Q=Halogen Free
- Package: B=Tube, T/R=Tape&Reel

TACT SWITCH

SPECIFICATION

MECHANICAL

Operation Force: 520 ± 130gf Yellow (Y)
320 ± 80gf Salmon (S)
260 ± 50gf Red (R)
160 ± 50gf Brown (N)
100 ± 50gf Black (K)
Stroke: 0.25 +0.2mm / -0.1mm

ENVIRONMENTAL

Operation Temperature: -25°C to +70°C
Storage Temperature: -30°C to +80°C

ELECTRICAL

Electrical Life: *Phosphor Bronze Dome
50,000 cycles for 320gf, 520gf
100,000 cycles for 260gf
200,000 cycles for 100gf, 160gf
*Stainless Steel Dome
300,000 cycles for 320gf, 520gf
500,000 cycles for 260gf
1,000,000 cycles for 100gf, 160gf
Rating: 50mA , 12VDC

PACKAGE

DTSM(G)-61:1000 pcs/reel
DTSM-62:900 pcs/reel
DTSMG-62:1000 pcs/reel
DTSM(G)-63, 64:700 pcs/reel
DTSM(G)-65:380 pcs/reel
DTSM-66:200 pcs/reel
77 pcs/tube

CIRCUIT

DTSM-6

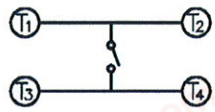

DTSMG-6

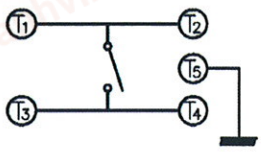

DTSM-6

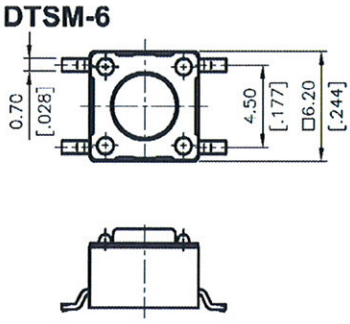

DTSM-6

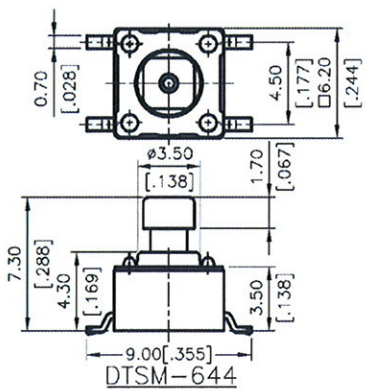

DTSM-644

DTSM-644	□A	2.40	0.095
	□B	1.60	0.063
DTSM-648	□A	2.80	0.110
	□B	2.00	0.079
PROD. NO.	LOC.	MM	INCH.

DTSM-66	13.00[.512]
DTSM-65	9.50[.374]
DTSM-63	7.00[.275]
DTSM-62	5.00[.197]
DTSM-61	4.30[.169]
PROD. NO.	H

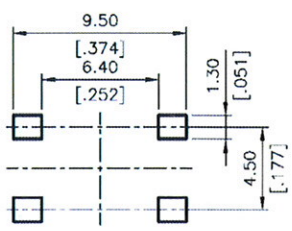

P.C.B LAYOUT

DTSMG-6

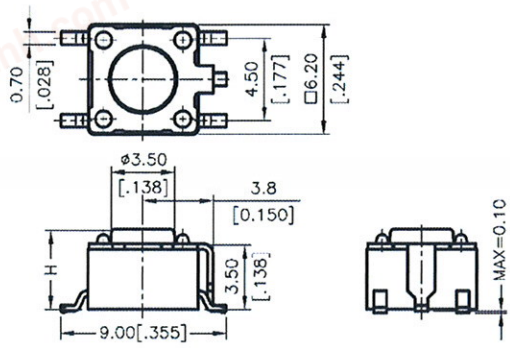

DTSMG-66	13.00[.512]
DTSMG-65	9.50[.374]
DTSMG-63	7.00[.275]
DTSMG-62	5.00[.197]
DTSMG-61	4.30[.169]
PROD. NO.	H

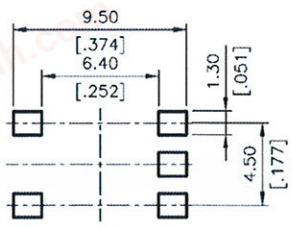

P.C.B LAYOUT