chanhvinh.com

TACT SWITCH

DTSA-6 SERIES

6x6 Right Angle & Ground Terminal Type

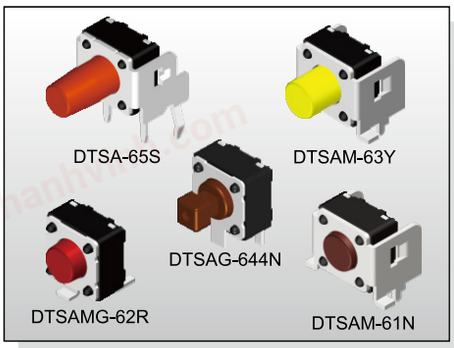

FEATURES

※Variety of actuator lengths
※Optional ground pin
※Cap options

APPLICATION

※Audio, OA equipment
※Instrumentation
※Setup box

SPECIFICATION

Contact Rating	50mA, 12V DC
Contact Resistance	100mΩ max.
Insulation Resistance	100MΩ min. 500V DC
Dielectric Strength	250V AC/1 minute
Operating Force	100±50gf, Black(K) 160±50gf, Brown(N) 260±50gf, Red(R) 320±80gf, Salmon(S) 520±130gf, Yellow(Y)
Travel	0.25mm
Operating Life	Phosphor Bronze Dome 50,000 cycles for 520/320gf 100,000 cycles for 260gf 200,000 cycles for 160/100gf Stainless Steel Dome 300,000 cycles for 520/320gf 500,000 cycles for 260gf 1,000,000 cycles for 160/100gf
Operating Temp.	-25°C ~ +70°C
Storage Temp.	-30°C ~ +80°C

HOW TO ORDER

D T S □ - 6 □ □ - □ - □ - □

A=Right Angle
AM=Right Angle & S.M.T.
AG=Right Angle & Ground Pin
AMG=S.M.T. & Ground Pin
(Halogen Free Only)

Dimension H:
*Please Refer To Drawing Below

□=Phosphor Bronze Dome
S=Stainless Steel Dome

Operating Force:
K=Black, 100gf
N=Brown, 160gf
R=Red, 260gf
*S=Salmon, 320gf
*Y=Yellow, 520gf
(*Not Available For Halogen Free)

V=RoHS & Lead Free Solderable
Q=Halogen Free

□=Bulk Pack
T/R=Tape & Reel
(Except DTSA, DTSAG)

CIRCUIT

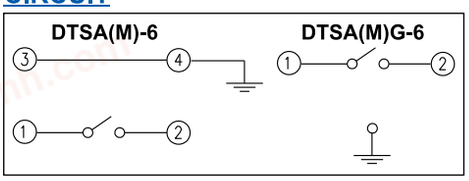

PACKAGE

<Bag>
DTSA(G)-6: 500 pcs
<Tape & Reel>
DTSAM-6: 500 pcs
DTSAMG-61, 62: 500 pcs
DTSAMG-63, 64, 65: 380 pcs

DTSA-6

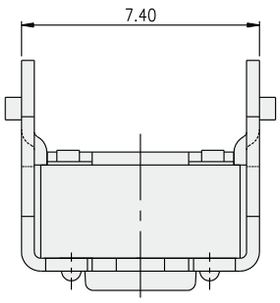

PART NO.	H
DTSA-61	3.15
DTSA-62	3.85
DTSA-63	5.85
DTSA-644	6.15(SQ.2.40)
DTSA-648	6.15(SQ.2.80)
DTSA-65	8.35
DTSA-66	11.85

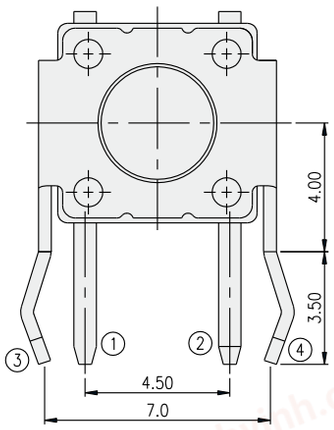

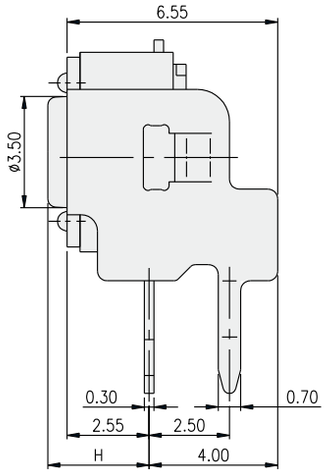

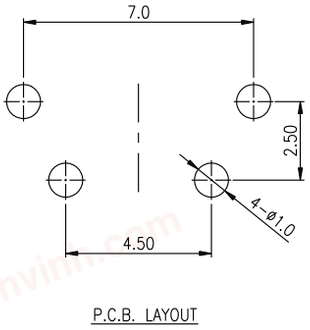

P.C.B. LAYOUT

TACT SWITCH

DTSA-6 SERIES

6x6 Right Angle & Ground Terminal Type

DTSAG-6

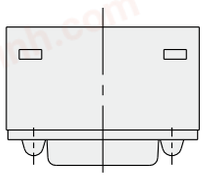

PART NO.	H
DTSAG-61	4.30
DTSAG-62	5.00
DTSAG-63	7.00
DTSAG-644	7.30(SQ.2.40)
DTSAG-648	7.30(SQ.2.80)
DTSAG-65	9.50
DTSAG-66	13.00

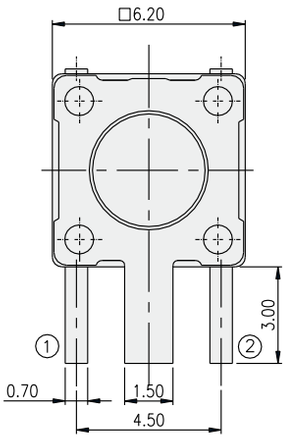

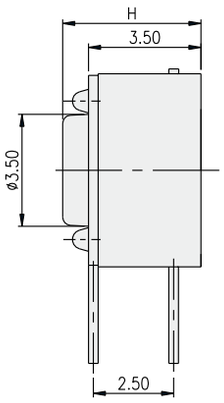

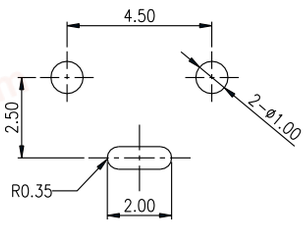

P.C.B. LAYOUT

DTSAMG-6

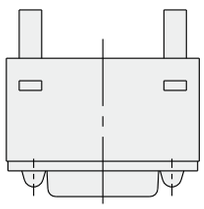

PART NO.	H
DTSAMG-61	4.30
DTSAMG-62	5.00
DTSAMG-63	7.00
DTSAMG-644	7.30(SQ.2.40)
DTSAMG-648	7.30(SQ.2.80)
DTSAMG-65	9.50
DTSAMG-66	13.00

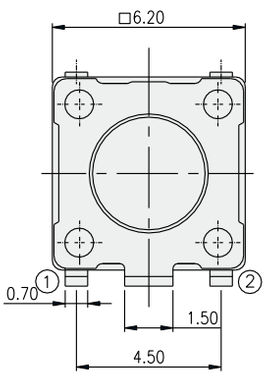

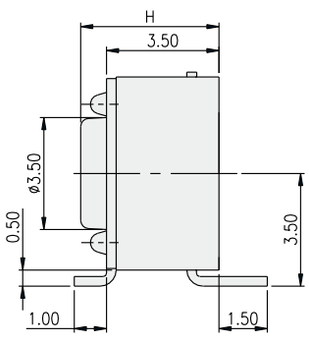

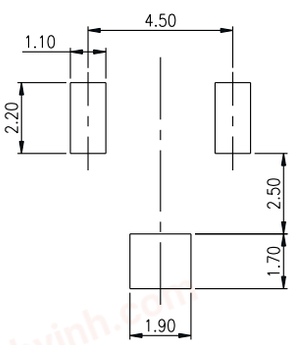

P.C.B. LAYOUT

chanhvinh.com

TACT SWITCH

DTSA-6 SERIES

6x6 Right Angle & Ground Terminal Type

DTSAM-6

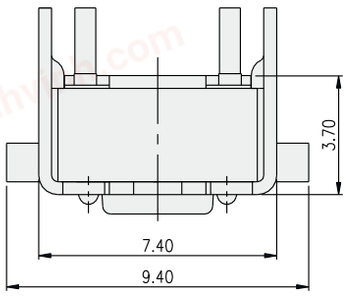

PART NO.	H
DTSAM-61	3.60
DTSAM-62	4.30
DTSAM-63	6.30
DTSAM-644	7.30(SQ.2.40)
DTSAM-648	7.30(SQ.2.80)
DTSAM-65	8.80

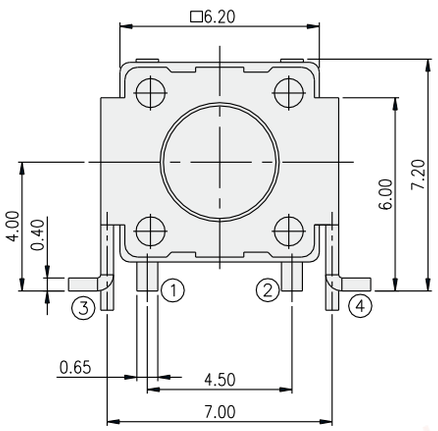

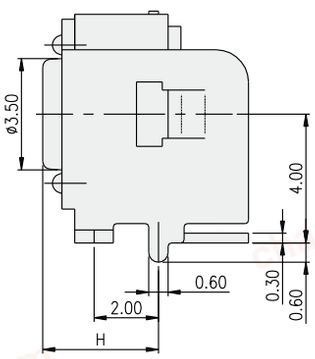

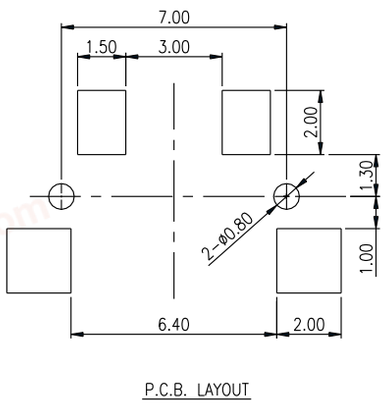

P.C.B. LAYOUT