chanhvinh.com

TMD3725

ALS, Color and Proximity Sensor Module

General Description

The device features advanced proximity measurement, color sense (RGBC+IR), and digital ambient light sensing (ALS). The package has been designed to accommodate a “single hole” aperture approach. The slim module incorporates an IR LED and factory calibrated LED driver. The proximity detection feature provides object detection (e.g. mobile device screen to user’s ear) by photodiode detection of reflected IR energy (sourced by the integrated LED). Detect/release events are interrupt driven, and occur when proximity result crosses upper and/or lower threshold settings. The proximity engine features offset adjustment registers to compensate for unwanted IR energy reflection at the sensor. Proximity results are further improved by automatic ambient light subtraction. The ALS detection feature provides photopic light intensity data. The color photodiodes have UV and IR blocking filters and a dedicated data converters producing 16-bit data. This architecture allows applications to accurately measure ambient light which enables devices to calculate illuminance and color temperature to control display backlight and chromaticity.

Ordering Information and Content Guide appear at end of datasheet.

Key Benefits & Features

The benefits and features of TMD3725, ALS, Color and Proximity Sensor Module are listed below:

Figure 1:
Added Value of Using TMD3725

Benefits	Features
• Single glass aperture solution	• 1.0mm spacing between proximity IR LED and sensor
• Reduced board space requirements and enables low-profile system design	• Small footprint and low-profile package (3.65 mm x 2.00 mm x 1.00 mm)
• Accurate color temperature and ambient light sensing	• UV / IR blocking filters • 46^0 Average FOV • Photopic ambient light sensing (ALS) • Programmable gain and integration time
• Compact integrated optical module	• Color (RGB), Ambient Light and Proximity Sensing with integrated IR LED
• Reduced power consumption	• Power management features (active, idle and sleep states) • 1.8V power supply with 1.8V I^2C bus

chanhvinh.com

Applications

The TMD3725 applications include:

- Ambient light sensing
- Single hole proximity sensing
- Mobile phone touch screen disable
- Color temperature sensing to assist backlight, camera, and flash control

Block Diagram

The functional blocks of this device are shown below:

Figure 2:
Functional Blocks of TMD3725

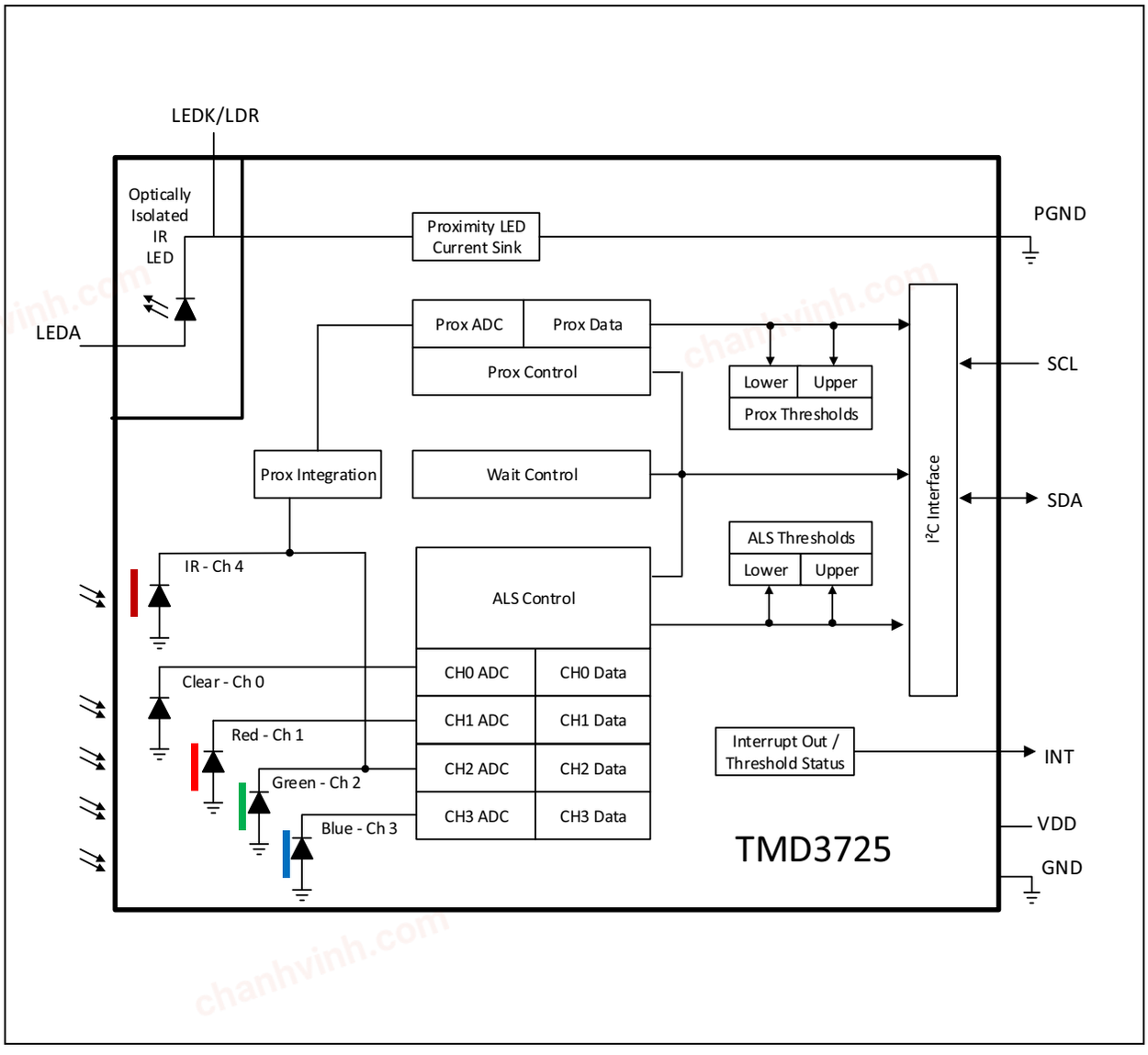

chanhvinh.com

Pin Assignment

Figure 3:
Pin Diagram of TMD3725

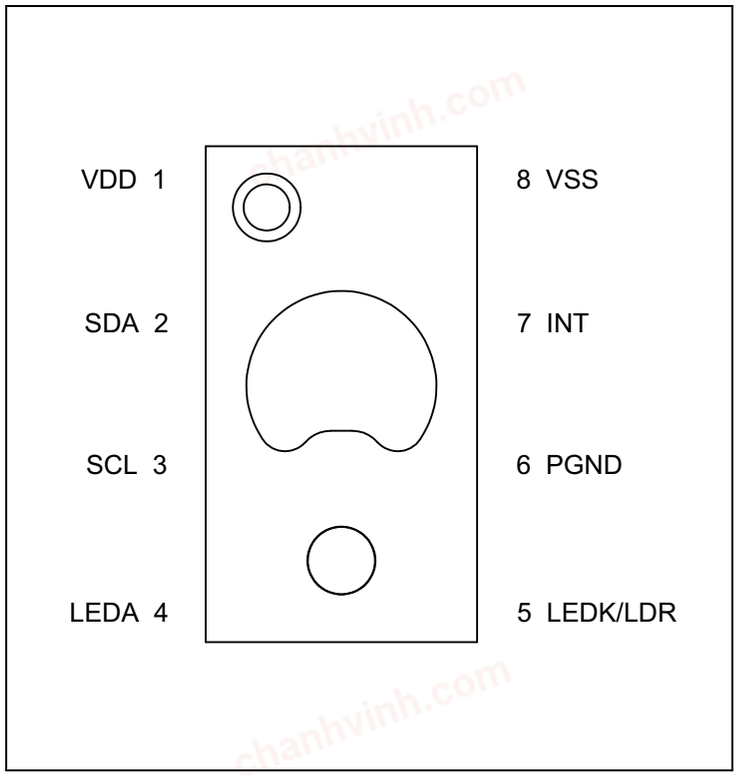

Figure 4:
Pin Description of TMD3725 (8-Pin Module)

Pin Number	Pin Name	Description
1	VDD	Supply voltage
2	SDA	I^2C serial data I/O terminal
3	SCL	I^2C serial clock input terminal
4	LEDA	LED anode
5	LEDK/LDR	LED driver (sinks current) and LED cathode (for direct access to LED)
6	PGND	Ground for LED current sink and pins with open drain
7	INT	Interrupt. Open drain output (active low)
8	VSS	Ground. All voltages are referenced to GND

chanhvinh.com

Absolute Maximum Ratings

Stresses beyond those listed under Absolute Maximum Ratings may cause permanent damage to the device. These are stress ratings only. Functional operation of the device at these or any other conditions beyond those indicated under Electrical Characteristics is not implied. Exposure to absolute maximum rating conditions for extended periods may affect device reliability.

Figure 5:
Absolute Maximum Ratings

Symbol	Parameter	Min	Max	Units	Comments
Electrical Parameters					
VDD	Supply Voltage to Ground	-0.3	2.2	V	
LEDA	LED Voltage to PGND	-0.3	3.6	V	
V_{IO}	Digital I/O Terminal Voltage	-0.3	3.6	V	
I_{IO}	SDA, INT Output Terminal Current	-1	20	mA	
Electrostatic Discharge					
I_{SCR}	Input Current (latch up immunity) JEDEC JESD78D	±100		mA	Class II
ESD_{HBM}	Electrostatic Discharge HBM JS-001-2014	± 2000		V	
ESD_{CDM}	Electrostatic Discharge CDM JEDEC JESD22-C101F	± 500		V	

chanhvinh.com

Symbol	Parameter	Min	Max	Units	Comments
Temperature Ranges and Storage Conditions					
T_{STRG}	Storage Temperature Range	-40	85	°C	
T_{BODY}	Package Body Temperature		260	°C	IPC/JEDEC J-STD-020 The reflow peak soldering temperature (body temperature) is specified according to IPC/JEDEC J-STD-020 "Moisture/Reflow Sensitivity Classification for Non-hermetic Solid State Surface Mount Devices."
RH_{NC}	Relative Humidity (non-condensing)	5	85	%	
MSL	Moisture Sensitivity Level	3			Maximum floor life time 168 hours

chanhvinh.com

Electrical Characteristics

All limits are guaranteed. The parameters with min and max values are guaranteed with production tests or SQC (Statistical Quality Control) methods.

Figure 6:
Recommended Operating Conditions

Symbol	Parameter	Conditions	Min	Typ	Max	Unit
V_{DD}	Supply voltage		1.7	1.8	2.0	V
V_{LEDA}	Supply voltage to LED anode (1)		3.0	3.3	3.6	V
T_A	Operating free-air temperature (2)		-30		85	°C

Note(s):

1. The minimum required supply voltage on the LED anode (V_{LEDA}) is the sum of the LED's VF and the voltage drop from the LDR pin to PGND pin. The minimum required V_{LEDA} can be lowered to 2.8V if the LED's forward current does not exceed 102mA (PLDRIVE value of 16 or less).
2. While the device is operational across the temperature range, performance will vary with temperature. Operational characteristics are at 25°C, unless otherwise noted.

Figure 7:
Operating Characteristics, VDD = 1.8V, T_A = 25°C (unless otherwise noted)

Symbol	Parameter	Conditions	Min	Typ	Max	Unit
f_{OSC}	Oscillator frequency			8.107		MHz
IDD	Supply current (1)	Active ALS State (PON=AEN=1, PEN=0) (2)	50	90	150	µA
		Idle State (PON=1,AEN=PEN=0) (3)		30	60	
		Sleep State (4)		0.7	5.0	
VOL	INT, SDA output low voltage	6mA sink current			0.6	V
ILEAK	Leakage current, SDA,SCL,INT		-5		5	µA
VIH	SCL, SDA input high voltage		1.26		3.3	V
VIL	SCL, SDA input low voltage		0		0.54	V
T_{Active}	Time from power-on to ready to receive I^2C commands			1.5		ms

Note(s):

1. Values are shown at the VDD pin and do not include current through the IR LED.
2. This parameter indicates the supply current during periods of ALS integration. If Wait is enabled (WEN=1), the supply current is lower during the Wait period.
3. Idle state occurs when PON=1 and all functions are not enabled.
4. Sleep state occurs when PON = 0 and I^2C bus is idle. If Sleep state has been entered as the result of operational flow, SAI = 1, PON will remain high.

chanhvinh.com

Typical Operating Characteristics

Figure 8:
Optical Characteristics, VDD = 1.8V, T_A = 25°C (unless otherwise noted)

Parameter	Conditions	Clear Channel			Unit
		Min	Typ	Max	
Re Irradiance responsivity Settings: AGAIN = 16x ATIME = 400ms	λ_D = 465 nm LED, 53.8 µW/cm^2		128		Count/ (µW/cm^2)
	λ_D = 530 nm LED, 43.9 µW/cm^2		161		
	λ_D = 620 nm LED, 37.5 µW/cm^2		191		
	Warm White LED, 45.6 µW/cm^2		161		
	Warm White LED, 45.6 µW/cm^2	5950	7000	8050	Counts
	λ_D = 950 nm LED, 21.1 µW/cm^2		1.5		Count/ (µW/cm^2)

Figure 9:
ALS Optical Characteristics, VDD = 1.8V, T_A = 25°C (unless otherwise noted)

Parameter	Conditions	Min	Typ	Max	Unit
Integration time step size		2.68	2.78	2.90	ms
Dark ADC count value	Ee = 0 µW/ cm^2 AGAIN: 64x ATIME = 100ms (0x23)	0	1	2	Counts (1)
Gain scaling, relative to 1x gain setting	AGAIN = 4x		4		x
	AGAIN = 16x		16		
	AGAIN = 64x		67		
	AGAIN = 128x		140		
ADC noise	AGAIN = 16x		0.005		% full scale

Note(s):

1. The typical value based on 3-sigma distribution. An AGAIN setting of 16x correlates to a typically dark ADC count value less than or equal to 1.

chanhvinh.com

Figure 10:
Proximity Optical Characteristics, VDD = 1.8V, T_A = 25°C (unless otherwise noted)

Parameter	Conditions	Min	Typ	Max	Unit
Part to part variation (1)	Conditions: PGAIN = 2 (4x) PLDRIVE = 8 (54mA) PPULSE = 15 (16 pulses) PPULSE_LEN = 1 (8µs) d=23mm round target 30mm target distance	75	100	125	%
Response, absolute	Basic proximity measurement (2) Conditions: PGAIN = 2 (4x), PLDRIVE = 16 (102mA) PPULSE = 15 (16 pulses) PPULSE_LEN = 2 (16µs) Target material: 90% reflective surface of Kodak gray card Target Size: 100mm x 100mm Target Distance: 100mm	128	160	192	Counts
Response, no target after optical calibration	PGAIN = 2 (4x) ILEDDRIVE = 16 (102mA) PPULSE = 16 (17 pulses) Pulse Length = 2 (16µs)	0		12	
Noise/Signal (3)	PGAIN = 2 (4x) IRLEDDRIVE = 8 (54mA) PPULSE = 15 (16 pulses) PPULSE_LEN = 1 (8µs) d=23mm round target 30mm target distance			1	%

Note(s):

1. Production tested result is the average of 5 readings expressed relative to a calibrated response.
2. Representative result by characterization.
3. Production tested result is the average of 20 readings divided by the maximum proximity value 255.

chanhvinh.com

Figure 11:
CRGB Optical Characteristics, VDD = 1.8V, T_A = 25°C (unless otherwise noted)

Parameter	Conditions	Red/Clear		Green/Clear		Blue/Clear	
		Min	Max	Min	Max	Min	Max
Color ADC count value ratio: color/clear	λ_D = 465 nm	0%	20%	0% (1)	55%	80%	100%
	λ_D = 525 nm	0%	30% (1)	65%	90%	0%	50% (1)
	λ_D = 615 nm	80%	110%	0% (1)	20%	0%	20%
	White LED, 2700K	50%	70%	24%	45%	10%	35%

Note(s):

1. Not production tested.

Figure 12:
Spectral Responsivity

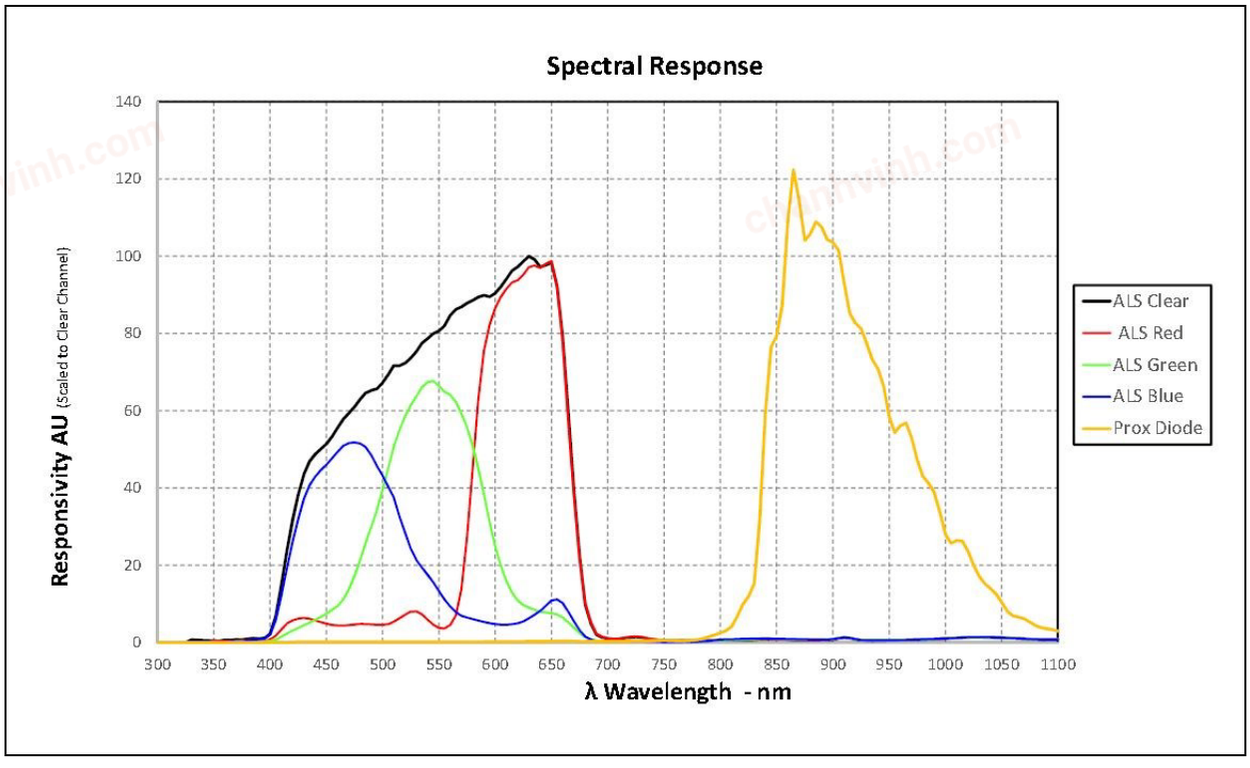

chanhvinh.com

Figure 13:
Illuminance (Lux) vs Counts (Clear Channel)

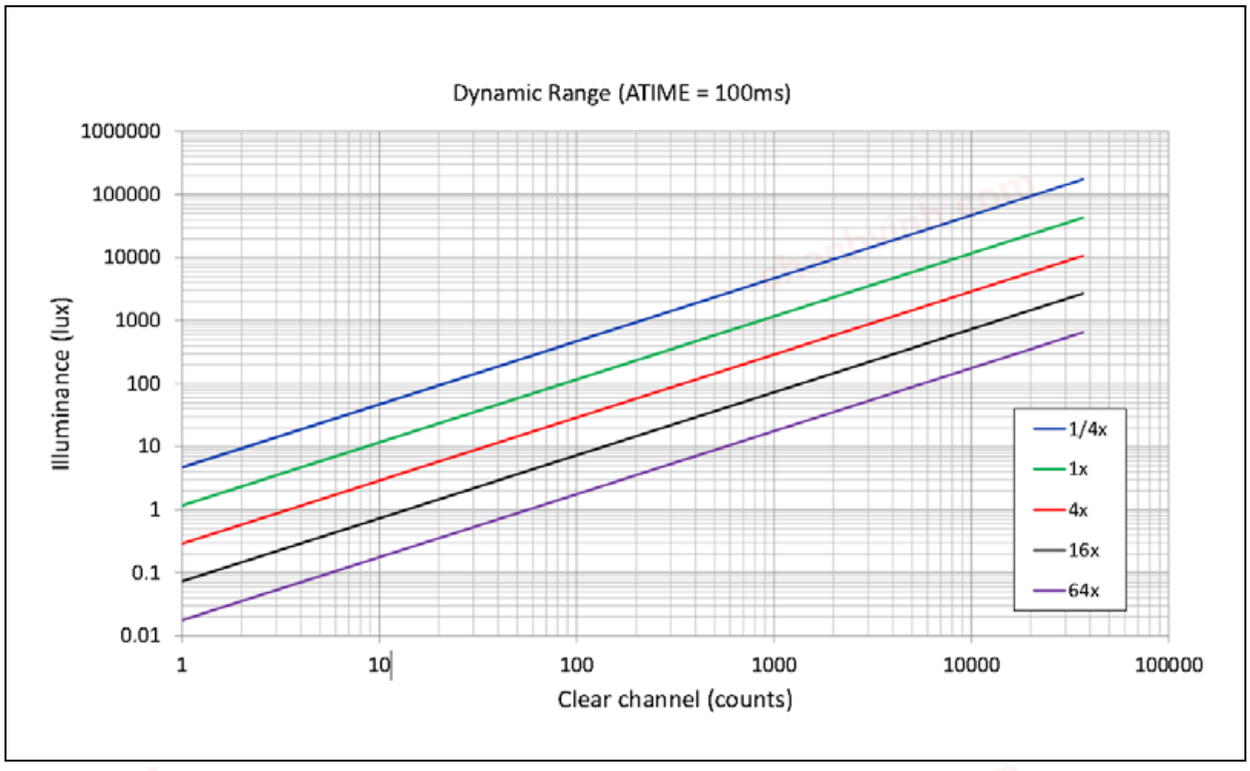

Figure 14:
ALS/Color Responsivity vs Angular Displacement

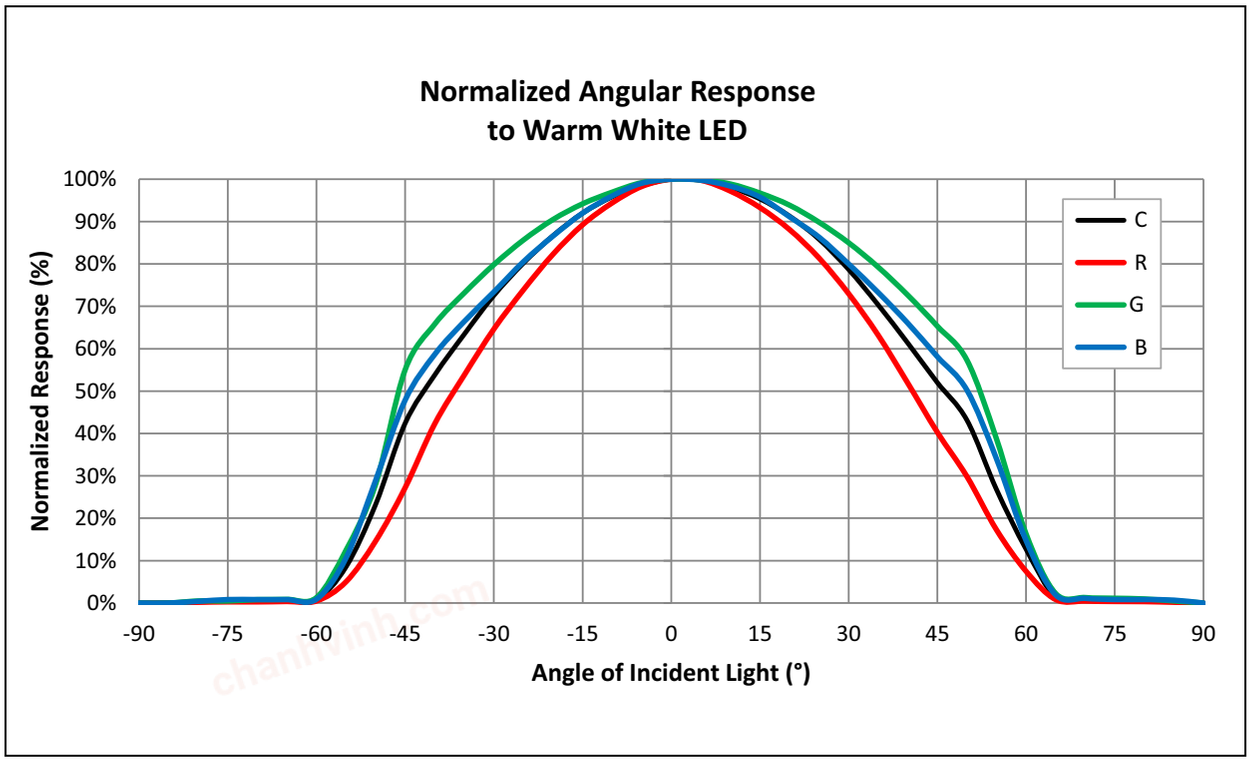

chanhvinh.com

Figure 15:
Proximity Operation

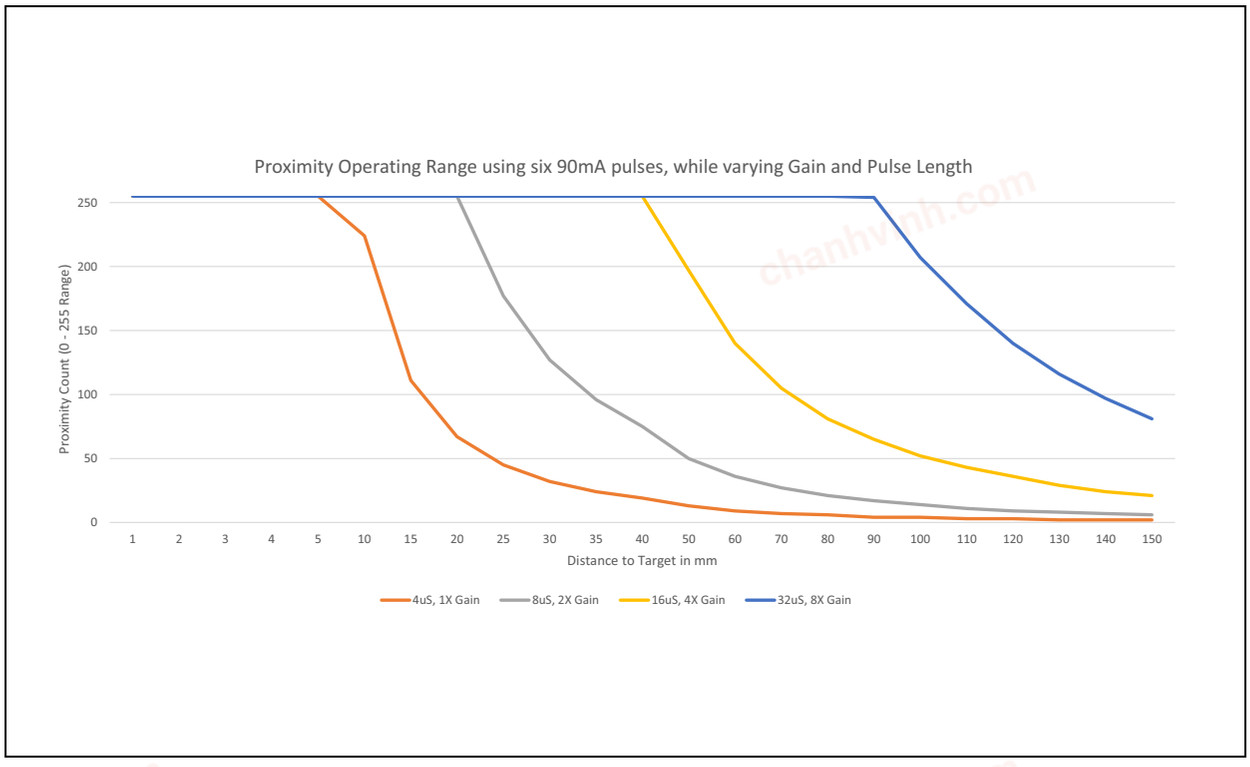

Proximity Operation: By varying Gain, LED drive current, number of LED pulses and LED pulse duration the proximity detection range can be adjusted.

chanhvinh.com

Detailed Description

Proximity

Proximity results are affected by three fundamental factors: the integrated IR LED emission, IR reception, and environmental factors, including target distance and surface reflectivity.

The IR reception signal path begins with IR detection from a photodiode and ends with the 8-bit proximity result in PDATA register. Signal from the photodiode is amplified, and offset adjusted to optimize performance. Offset correction or cross-talk compensation is accomplished by adjustment to the POFFSET register.

The analog circuitry of the device applies the offset value as a subtraction to the signal accumulation; therefore a positive offset value has the effect of decreasing the results.

Color and Ambient Light Sense

The color and ALS reception signal path begins as photodiodes receive filtered light and ends with 16-bit results. The IR photodiode primarily used for proximity sense, is multiplexed with the green channel's ADC to measure the IR content of ambient light. The color photodiodes are filtered with a UV and IR filters. The IR photodiode is filtered to receive only IR. Signal from the RGBC photodiodes simultaneously accumulate for a period of time set by the value in ATIME before the results are available. Measurement of IR must be done in a separate integration because it shares the ADC with the green photodiode. Gain is adjustable from 1x to 128 x to facilitate operation over a wide range of lighting conditions. Custom LUX equations are used to calculate the amount of ambient light, color temperature, as well as, determine the light type (e.g. LED, fluorescent, incandescent, etc.) using the ALS results.

I^2C Characteristics

The device uses I^2C serial communication protocol for communication. The device supports 7-bit chip addressing and both standard and fast clock frequency modes with a chip address of 0x39. Read and Write transactions comply with the standard set by Philips (now NXP).

Internal to the device, an 8-bit buffer stores the register address location of the desired byte to read or write. This buffer auto-increments upon each byte transfer and is retained between transaction events (i.e. valid even after the master issues a STOP command and the I^2C bus is released).

During consecutive Read transactions, the future/repeated I^2C Read transaction may omit the memory address byte normally following the chip address byte; the buffer retains the last register address + 1.

chanhvinh.com

I²C Write Transaction

A Write transaction consists of a START, CHIP-ADDRESS$_{WRITE}$, REGISTER-ADDRESS, DATA BYTE(S), and STOP. Following each byte (9th clock pulse) the slave places an ACKNOWLEDGE/ NOT-ACKNOWLEDGE (ACK/NACK) on the bus. If NACK is transmitted by the slave, the master may issue a STOP.

I²C Read Transaction

A Read transaction consists of a START, CHIP-ADDRESS$_{WRITE}$, REGISTER-ADDRESS, START, CHIP-ADDRESS$_{READ}$, DATA BYTE(S), and STOP. Following all but the final byte the master places an ACK on the bus (9th clock pulse). Termination of the Read transaction is indicated by a NACK being placed on the bus by the master, followed by STOP.

Alternately, if the previous I²C transaction was a Read, the internal register address buffer is still valid, allowing the transaction to proceed without “re”-specifying the register address. In this case the transaction consists of a START, CHIP-ADDRESS$_{READ}$, DATA BYTE(S), and STOP. Following all but the final byte the master places an ACK on the bus (9th clock pulse). Termination of the Read transaction is indicated by a NACK being placed on the bus by the master, followed by STOP.

The I²C bus protocol was developed by Philips (now NXP). For a complete description of the I²C protocol, please review the NXP I²C design specification at:

www.i2c-bus.org/references/

Timing Diagrams

Figure 16:
I²C Timing

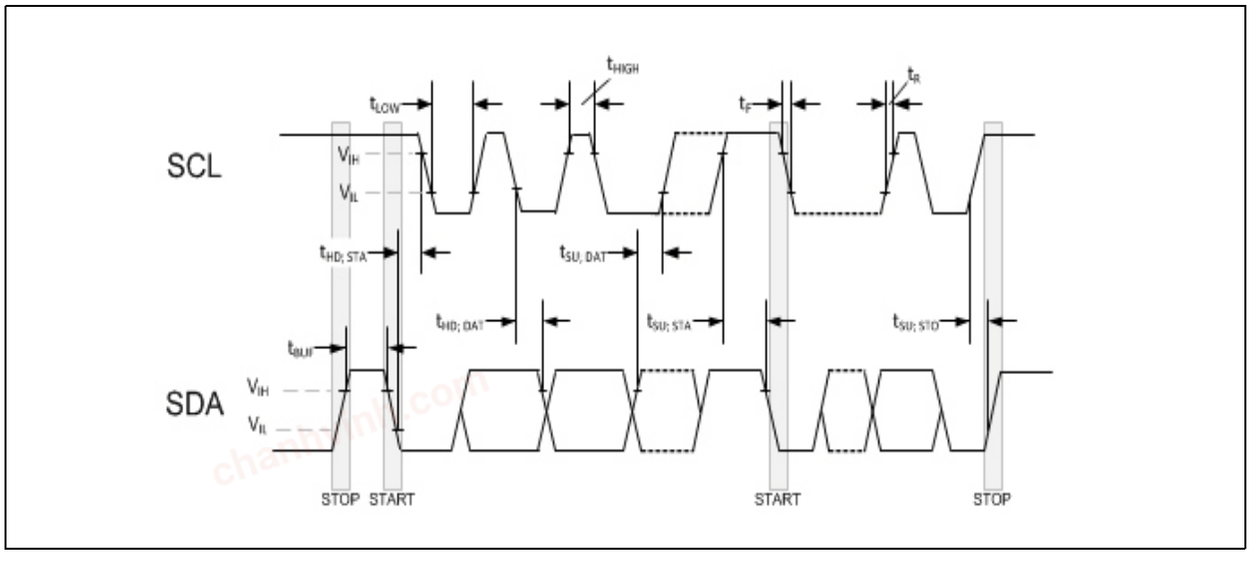

chanhvinh.com

Principles of Operation

System State Machine

An internal state machine provides system control of the ALS, proximity detection, and power management features of the device. At power up, an internal power-on-reset initializes the device and puts it in a lowpower Sleep state. When a write on I^2C bus to the Enable register (0x80) PON bit is set, the device transitions to the Idle state. If PON is disabled, the device will return to the Sleep state to save power. Otherwise, the device will remain in the Idle state until a Proximity or ALS function is enabled. Once enabled, the device will execute the ALS, Proximity and Wait states in sequence as indicated in Figure 17 and Figure 18. Upon completion, the device will automatically begin a new ALS-Prox-Wait cycle as long as PON and either PEN or AEN remain enabled. If the Prox or ALS function generates an interrupt and the Sleep-After-Interrupt (SAI) feature is enabled, the device will transition to the Sleep state and remain in a low-power mode until an I^2C command is received clearing the interrupts in the STATUS register. See Interrupts for additional information.

chanhvinh.com

Figure 17:
Detailed State Diagram

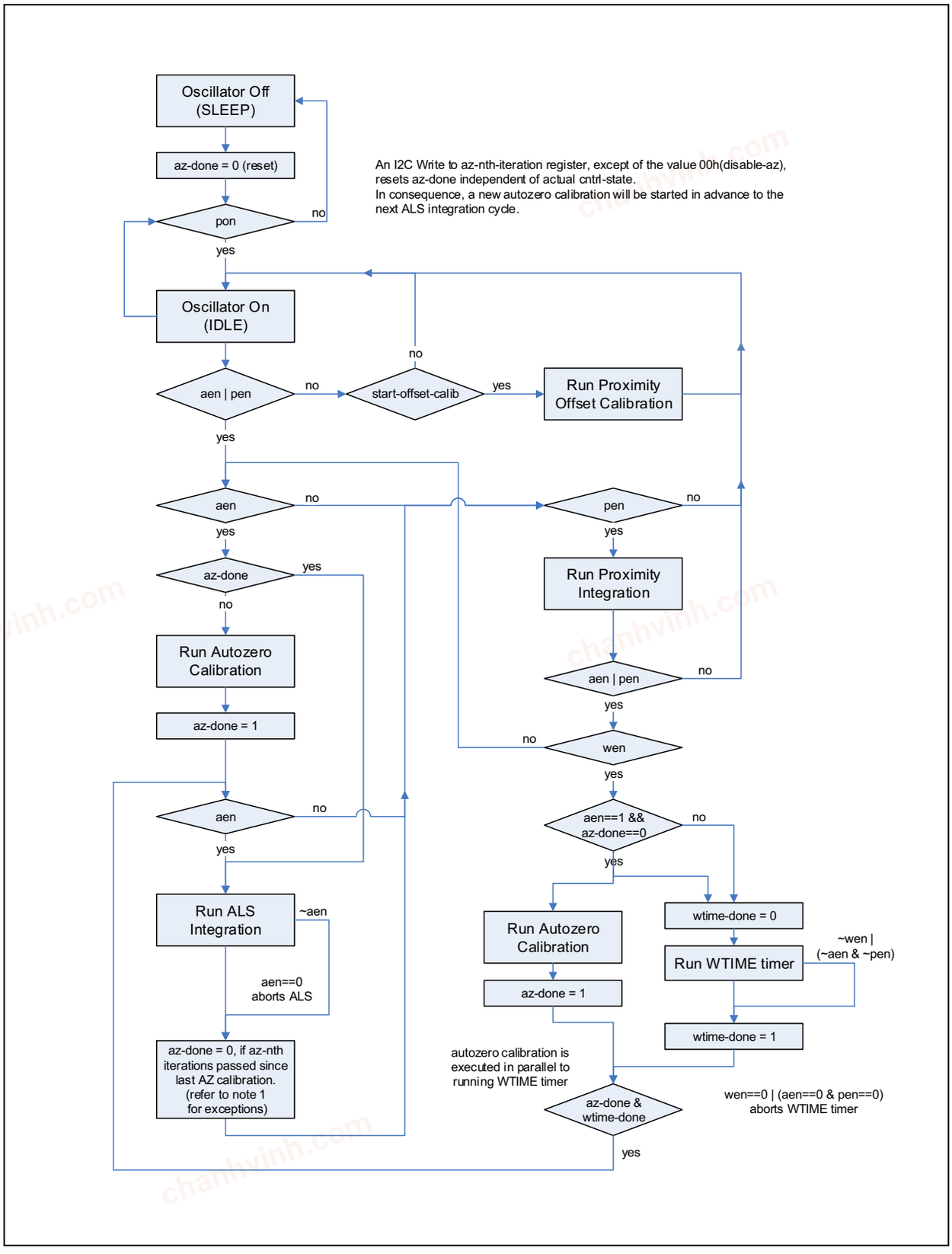

chanhvinh.com

Figure 18:
Simplified State Diagram

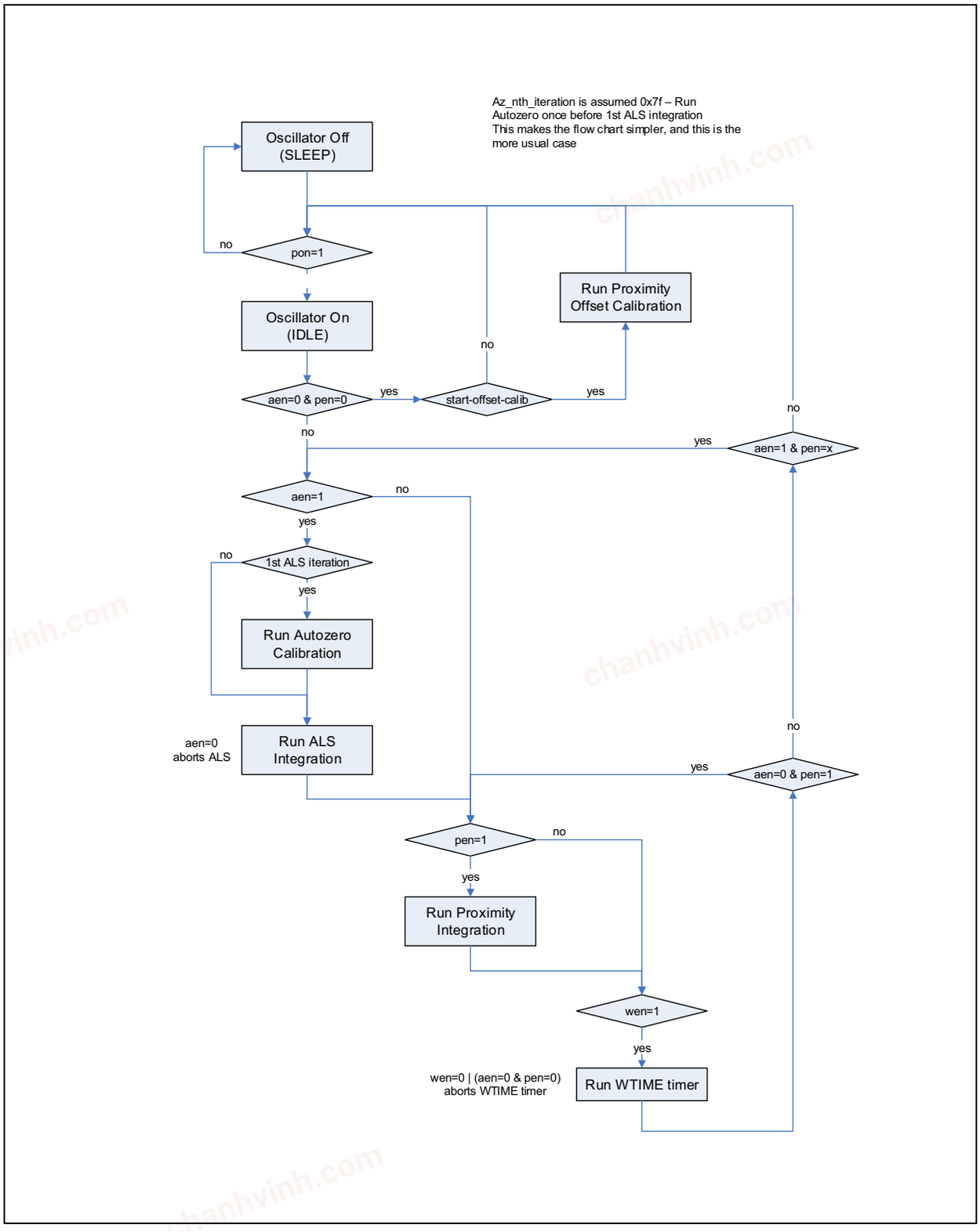

chanhvinh.com

Register Description

Register Overview

Figure 19:
Register Overview

Address	Register Name	R/W	Register Function	Reset Value
0x80	ENABLE	R/W	Enables states and functions	0x00
0x81	ATIME	R/W	ALS integration time	0x00
0x82	PRATE	R/W	Proximity sampling time	0x1F
0x83	WTIME	R/W	Wait time	0x00
0x84	AILTL	R/W	ALS interrupt low threshold low byte	0x00
0x85	AILTH	R/W	ALS interrupt low threshold high byte	0x00
0x86	AIHTL	R/W	ALS interrupt high threshold low byte	0x00
0x87	AIHTH	R/W	ALS interrupt high threshold high byte	0x00
0x88	PILT	R/W	Proximity interrupt low threshold	0x00
0x8A	PIHT	R/W	Proximity interrupt high threshold	0x00
0x8C	PERS	R/W	Interrupt persistence filters	0x00
0x8D	CFG0	R/W	Configuration register zero	0x80
0x8E	PCFG0	R/W	Proximity configuration register zero	0x4F
0x8F	PCFG1	R/W	Proximity configuration register one	0x80
0x90	CFG1	R/W	Configuration register one	0x00
0x91	REVID	R	Revision ID	0x00
0x92	ID	R	Device ID	0xE4
0x93	STATUS	R	Device status register	0x00
0x94	CDATAL	R	Clear channel data low byte	0x00
0x95	CDATAH	R	Clear channel data high byte	0x00
0x96	RDATAL	R	Red channel data low byte	0x00
0x97	RDATAH	R	Red channel data high byte	0x00
0x98	GDATAL (1)	R	Green channel data low byte	0x00
0x99	GDATAH (1)	R	Green channel data high byte	0x00
0x9A	BDATAL	R	Blue channel data low byte	0x00
0x9B	BDATAH	R	Blue channel data high byte	0x00

chanhvinh.com

Address	Register Name	R/W	Register Function	Reset Value
0x9C	PDATA	R	Proximity channel data	0x00
0x9E	REVID2	R	Auxiliary ID	0x00
0x9F	CFG2	R/W	Configuration register two	0x04
0xAB	CFG3	R/W	Configuration register three	0x0C
0xC0	POFFSETL	R/W	Proximity Offset Magnitude	0x00
0xC1	POFFSETH	R/W	Proximity Offset Sign	0x00
0xD6	AZ_CONFIG	R/W	Autozero configuration	0x7F
0xD7	CALIB	R/W	Calibration start	0x00
0xD9	CALIBCFG	R/W	Calibration configuration	0x50
0xDC	CALIBSTAT	R/W	Calibration status	0x00
0xDD	INTENAB	R/W	Interrupt enables	0x00

Note(s):

1. Address 0x98 and 0x99 will contain the results for the IR photodiode when controlled by the Green/IR MUX.
2. Register Access:
   R = Read Only
   W = Write Only
   R/W = Read or Write
   SC = Self Clearing after access

chanhvinh.com

Detailed Register Description

Enable Register (Address 0x80)

Figure 20:
Enable Register

Addr: 0x80		Enable		
Bit	**Bit Name**	**Default**	**Access**	**Bit Description**
7:4	RESERVED	0000	RW	Reserved.
3	WEN	0	RW	This bit activates the wait feature. Active high.
2	PEN	0	RW	This bit activates the proximity detection. Active high.
1	AEN	0	RW	This bit actives the ALS function. Active high. *Set AEN=1 and PON=1 in the same command to ensure auto-zero function is run prior to the first measurement.
0	PON	0	RW	This field activates the internal oscillator and ADC channels. Active high.

Before activating AEN or PEN, preset each applicable operating mode registers and bits.

chanhvinh.com

ATIME Register (Address 0x81)

Figure 21:
ATIME Register

Addr: 0x81		ATIME					
Bit	**Bit Name**	**Default**	**Access**	**Bit Description**			
7:0	ATIME	0x00	RW	ALS/Color value that specifies the integration time in 2.78ms intervals. 0x00 indicates 2.8ms. The maximum ALS value depends on the integration time. For every 2.78ms, the maximum value increases by 1024. This means that to be able to reach ALS full scale, the integration time has to be at least 64*2.8ms.			
				Value	**Integration Cycles**	**Integration Time**	**Maximum ALS Value**
				0x00	1	2.8ms	1023
				0x01	2	5.6ms	2047
				…	…	…	…
				0x3F	64	180ms	65535
				…	…	…	…
				0xFF	256	719ms	65535

The ATIME register controls the integration time of the ALS ADCs. The timer is implemented with a down counter with 0x00 as the terminal count. The timer is clocked at a 2.8ms nominal rate. Loading 0x00 will generate a 2.8ms integration time, loading 0x01 will generate a 5.6ms integration time, and so forth. The RC oscillator runs at 8MHz nominal rate. This gets divided by 11 to generate the integration clock of 727kHz. One count in ATIME (nominal 2.8ms) are 2.78ms. This is 2048 integration clock cycles: 125ns*11*8*256=2.8ms.

PTIME Register (Address 0x82)

Figure 22:
PTIME Register

Addr: 0x82		PRATE		
Bit	**Bit Name**	**Default**	**Access**	**Bit Description**
7:0	PTIME	0x1F	RW	This register defines the duration of 1 Prox Sample, which is (PTIME + 1)*88µs.

chanhvinh.com

WTIME Register (Address 0x83)

Figure 23:
WTIME Register

Addr: 0x83		WTIME				
Bit	**Bit Name**	**Default**	**Access**	**Bit Description**		
7:0	WTIME	0x00	RW	Value that specifies the wait time between ALS cycles in 2.78ms increments.		
				Value	**Increments**	**Wait Time**
				0x00	1	2.8ms (33.8ms)
				0x01	2	5.6ms (67.6ms)
				…	…	…
				0x3F	64	180ms (2.16s)
				…	…	…
				0xFF	256	719ms (8.65s)

The wait timer is implemented using a down counter. Wait time = (value +1) x 2.8ms. If WLONG is enabled then Wait time = (value +1) x 2.8ms x 12.

AILTL Register (Address 0x84)

Figure 24:
AILTL Register

Addr: 0x84		AILTL		
Bit	**Bit Name**	**Default**	**Access**	**Bit Description**
7:0	AILTL	0x00	RW	This register sets the low byte of the LOW ALS threshold.

The Clear (C) channel is compared against low-going 16-bit threshold value set by AILTL and AILTH.

chanhvinh.com

AILTH Register (Address 0x85)

Figure 25:
AILTH Register

Addr: 0x85		AILTH		
Bit	Bit Name	Default	Access	Bit Description
7:0	AILTH	0x00	RW	This register sets the high byte of the LOW ALS threshold.

The Clear (C) channel is compared against low-going 16-bit threshold value set by AILTL and AILTH.
The contents of the AILTH and AILTL registers are combined and treated as a sixteen bit threshold value. If the value generated by the C channel is below the AILTL/H threshold and the APERS value is reached, the AINT bit is asserted. If AIEN is set, then the INT pin will also assert.
When setting the 16-bit ALS threshold AILTL must be written first, immediately followed by AILTH. Internally, the lower 8-bits are buffered until the upper 8-bits are written. As the upper 8-bits are written both the high and low bytes are simultaneously latched as a 16-bit value.

AIHTL Register (Address 0x86)

Figure 26:
AIHTL Register

Addr: 0x86		AIHTL		
Bit	Bit Name	Default	Access	Bit Description
7:0	AIHTL	0x00	RW	This register sets the low byte of the HIGH ALS threshold.

The Clear (C) channel is compared against high-going 16-bit threshold value set by AIHTL and AIHTH.
The contents of the AIHTH and AIHTL registers are combined and treated as a sixteen bit threshold value. If the value generated by the C channel is above the AIHTL/H threshold and the APERS value is reached, the AINT bit is asserted. If AIEN is set, then the INT pin will also assert. When setting the 16-bit ALS threshold AIHTL must be written first, immediately followed by AIHTH. Internally, the lower 8-bits are buffered until the upper 8-bits are written. As the upper 8-bits are written both the high and low bytes are simultaneously latched as a 16-bit value.

chanhvinh.com

AIHTH Register (Address 0x87)

Figure 27:
AIHTH Register

Addr: 0x87		AIHTH		
Bit	Bit Name	Default	Access	Bit Description
7:0	AIHTH	0x00	RW	This register sets the high byte of the HIGH ALS threshold.

The Clear (C) channel is compared against high-going 16-bit threshold value set by AIHTL and AIHTH.
The contents of the AIHTH and AIHTL registers are combined and treated as a sixteen bit threshold value. If the value generated by the C channel is above the AIHTL/H threshold and the APERS value is reached, the AINT bit is asserted. If AIEN is set, then the INT pin will also assert.
When setting the 16-bit ALS threshold AIHTL must be written first, immediately follow by AIHTH. Internally, the lower 8-bits are buffered until the upper 8-bits are written. As the upper 8-bits are written both the high and low bytes are simultaneously latched as a 16-bit value.

PILT Register (Address 0x88)

Figure 28:
PILT Register

Addr: 0x88		PILT		
Bit	Bit Name	Default	Access	Bit Description
7:0	PILT	0x00	RW	This register sets the Proximity ADC channel low threshold.

The proximity channel is compared against low-going 8-bit threshold value set by PILT.
If the value generated by the proximity channel is below the PILT threshold and the PPERS value is reached, the PINT bit is asserted. If PIEN is set, then the INT pin will also assert.

chanhvinh.com

PIHT Register (Address 0x8A)

Figure 29:
PIHT Register

Addr: 0x8A		PIHT		
Bit	**Bit Name**	**Default**	**Access**	**Bit Description**
7:0	PIHT	0x00	RW	This register sets the proximity ADC channel high threshold.

The proximity channel is compared against high-going 8-bit threshold value set by PIHT.
If the value generated by the proximity channel is above the PIHT threshold and the PPERS value is reached, the PINT bit is asserted. If PIEN is set, then the INT pin will also assert.

PERS Register (Address 0x8C)

Figure 30:
PERS Register

Addr: 0x8C		PERS			
Bit	**Bit Name**	**Default**	**Access**	**Bit Description**	
7:4	PPERS	0000	RW	This register sets the proximity persistence filter.	
				Value	**Interrupt**
				0	Every proximity cycle
				1	Any value outside PILT/PIHT thresholds
				2	2 consecutive proximity values out of range
				3	3 consecutive proximity values out of range
				…	….
				15	15 consecutive proximity values out of range

chanhvinh.com

Addr: 0x8C		PERS			
Bit	Bit Name	Default	Access	Bit Description	
3:0	APERS	0000	RW	This register sets the ALS persistence filter.	
				0	Every ALS cycle
				1	Any value outside ALS thresholds
				2	2 consecutive ALS values out of range
				3	3 consecutive ALS values out of range
				4	5 consecutive ALS values out of range
				5	10 consecutive ALS values out of range
				6	15 consecutive ALS values out of range
				7	20 consecutive ALS values out of range
				…	…
				13	50 consecutive ALS values out of range
				14	55 consecutive ALS values out of range
				15	60 consecutive ALS values out of range

The frequency of consecutive proximity channel results outside of threshold limits are counted; this count value is compared against the PPEARS value. If the counter is equal to the PPERS value an interrupt is asserted. Any time a proximity channel result is inside the threshold values the counter is cleared.
The frequency of consecutive clear channel results outside of threshold limits are counted; this count value is compared against the APEARS value. If the counter is equal to the APERS setting an interrupt is asserted. Any time a clear channel result is inside the threshold values the counter is cleared.

chanhvinh.com

CFG0 Register (Address 0x8D)

Figure 31:
CFG0 Register

Addr: 0x8D		CFG0		
Bit	**Bit Name**	**Default**	**Access**	**Bit Description**
7:3	Reserved	10000	RW	This field must be set to the default value.
2	WLONG	0	RW	When Wait Long is asserted the wait period as set by WTIME is increased by a factor of 12.
1:0	Reserved	00	RW	This field must be set to the default value.

The wait timer is implemented using a down counter.
Wait time = (value +1) x 2.8ms. If WLONG is enabled then
Wait time = (value +1) x 2.8ms x 12.

chanhvinh.com

PCFG0 Register (Address 0x8E)

Figure 32:
PCFG0 Register

Addr: 0x8E		PCFG0			
Bit	**Bit Name**	**Default**	**Access**	**Bit Description**	
7:6	PPULSE_LEN	01	RW	Proximity pulse length	
				Value	**Pulse Length**
				0	4µs
				1	8µs
				2	16µs
				3	32µs
5:0	PPULSE	001111	RW	Maximum number of pulses in a single proximity cycle.	
				Value	**Maximum Number of Pulses**
				0	1
				1	2
				2	3
				…	…
				63	64

The PPULSE_LEN field sets the width of all IR LED pulses within the proximity cycle. Longer pulses result in increased proximity range and typically result in less electrical noise generated in the analog front end. However, a setting of 8µs is recommended because less cumulative noise is generated during a proximity cycle.

The PPULSE field sets the maximum number of IR LED pulses that may occur in a proximity cycle. The proximity engine will automatically continue to add IR LED pulses, up to the value set in PPULSE or if a near-saturation condition occurs.

The dynamic range of the sensor is automatically adjusted to detect distant targets as well as prevent saturation from close targets.

This operation also reduces power consumption because proximity integration period is automatically shortened when a target is either to close or far from the sensor.

chanhvinh.com

PCFG1 Register (Address 0x8F)

Figure 33:
PCFG1 Register

Addr: 0x8F		PCFG1		
Bit	**Bit Name**	**Default**	**Access**	**Bit Description**
7:6	PGAIN	10	RW	This field sets the gain of the proximity IR sensor. **Value** / **Gain** 0 / 1x 1 / 2x 2 / 4x 3 / 8x
5	Reserved	0	RW	Reserved
4:0	PLDRIVE	0000	RW	This field sets the drive strength of the IR LED current. Values are approximate; actual current through LED is factory trimmed to normalize IR intensity. **Value** / **LED Current** 0 / 6mA 1 / 12mA i_{LED} = 6(PLDRIVE +1) mA 30 / 186mA 31 / 192mA

chanhvinh.com

CFG1 Register (Address 0x90)

Figure 34:
CFG1 Register

Addr: 0x90		CFG1		
Bit	**Bit Name**	**Default**	**Access**	**Bit Description**
7:4	Reserved	0000	RW	Reserved
3	IR_TO_GREEN	0	RW	If set high, the IR (Proximity) photodiode is switched into the Green channel's data converter. GDATAL/H register will report IR content. Green photodiode is not connected.
2	Reserved	0	RW	Reserved
1:0	AGAIN	00	RW	This field sets the gain of the ALS/Color sensor.

Value	LED Current
0	1x
1	4x
2	16x
3	64x

REVID Register (Address 0x91)

Figure 35:
REVID Register

Addr: 0x91		REVID		
Bit	**Bit Name**	**Default**	**Access**	**Bit Description**
7:3	Reserved	00000	RO	Reserved
2:0	REV_ID	Rev	RO	Device revision number

chanhvinh.com

ID Register (Address 0x92)

Figure 36:
ID Register

Addr: 0x92		ID		
Bit	Bit Name	Default	Access	Bit Description
7:2	ID	111001	RO	Device type identification.
1:0	Reserved	00	RO	Reserved

Status Register (Address 0x93)

Figure 37:
Status Register

Addr: 0x93		Status Register		
Bit	Bit Name	Default	Access	Bit Description
7	ASAT	0	R, SC	The Analog Saturation flag signals that the ALS/Color results may be unreliable due to saturation of the AFE.
6	PSAT	0	R, SC	The Proximity Saturation flag indicates that an ambient- or reflective-saturation event occurred during a previous proximity cycle.
5	PINT	0	R, SC	The Proximity Interrupt flag indicates that proximity results have exceeded thresholds and persistence settings.
4	AINT	0	R, SC	The ALS Interrupt flag indicates that ALS/Color results (clear channel) have exceeded thresholds and persistence settings.
3	CINT	0	R, SC	The Calibration Interrupt flag indicates that calibration has completed.
2	Reserved	0	R, SC	Reserved
1	PSAT_REFLECTIVE	0	R, SC	The Reflective Proximity Saturation Interrupt flag signals that the AFE has saturated during the IR LED active portion of proximity integration.
0	PSAT_AMBIENT	0	R, SC	The Ambient Proximity Saturation Interrupt flag signals that the AFE has saturated during the IR LED inactive portion of proximity integration.

All flags in this register can be cleared by setting the bit high. Alternatively, if the CFG3.int_read_clear bit is set, then simply reading this register automatically clears all eight flags.

chanhvinh.com

CDATAL Register (Address 0x94)

Figure 38:
CDATAL Register

Addr: 0x94		CDATAL		
Bit	Bit Name	Default	Access	Bit Description
7:0	CDATAL	0x00	RO	This register contains the low byte of the 16-bit clear channel data.

CDATAH Register (Address 0x95)

Figure 39:
CDATAH Register

Addr: 0x95		CDATAH		
Bit	Bit Name	Default	Access	Bit Description
7:0	CDATAH	0x00	RO	This register contains the high byte of the 16-bit clear channel data.

RDATAL Register (Address 0x96)

Figure 40:
RDATAL Register

Addr: 0x96		RDATAL		
Bit	Bit Name	Default	Access	Bit Description
7:0	RDATAL	0x00	RO	This register contains the low byte of the 16-bit red channel data.

RDATAH Register (Address 0x97)

Figure 41:
RDATAH Register

Addr: 0x97		RDATAH		
Bit	Bit Name	Default	Access	Bit Description
7:0	RDATAH	0x00	RO	This register contains the high byte of the 16-bit red channel data.

chanhvinh.com

GDATAL Register (Address 0x98)

Figure 42:
GDATAL Register

Addr: 0x98		GDATAL		
Bit	Bit Name	Default	Access	Bit Description
7:0	GDATAL	0x00	RO	This register contains the low byte of the 16-bit green channel data.

GDATAL Register: This register also contains the IR result as set by the Green/IR MUX.

GDATAH Register (Address 0x99)

Figure 43:
GDATAH Register

Addr: 0x99		GDATAH		
Bit	Bit Name	Default	Access	Bit Description
7:0	GDATAH	0x00	RO	This register contains the high byte of the 16-bit green channel data.

GDATAH Register: This register also contains the IR result as set by the Green/IR MUX.

BDATAL Register (Address 0x9A)

Figure 44:
BDATAL Register

Addr: 0x9A		BDATAL		
Bit	Bit Name	Default	Access	Bit Description
7:0	BDATAL	0x00	RO	This register contains the low byte of the 16-bit blue channel data.

BDATAH Register (Address 0x9B)

Figure 45:
BDATAH Register

Addr: 0x9B		BDATAH		
Bit	Bit Name	Default	Access	Bit Description
7:0	BDATAH	0x00	RO	This register contains the high byte of the 16-bit blue channel data.

chanhvinh.com

PDATA Register (Address 0x9C)

Figure 46:
PDATA Register

Addr: 0x9C		PDATA		
Bit	Bit Name	Default	Access	Bit Description
7:0	PDATA	0x00	RO	This register contains the 8-bit proximity channel data.

REVID2 Register (Address 0x9E)

Figure 47:
REVID2 Register

Addr: 0x9E		REVID2		
Bit	Bit Name	Default	Access	Description
7:4	Reserved	0000	RO	Reserved.
3:0	REVID2	0000	RO	Package Identification.

CFG2 Register (Address 0x9F)

Figure 48:
CFG2 Register

Addr: 0x9F		CFG2		
Bit	Bit Name	Default	Access	Bit Description
7:5	Reserved	000	RW	Reserved.
4	AGAINMAX	0	RW	This bit adjusts the overall ALS gain factor. See Figure 49 for recommended settings and corresponding overall ALS gain factor.
3	Reserved	0	RW	Reserved.
2	AGAINL	1	RW	This bit adjusts the overall ALS gain factor. See Figure 49 for recommended settings and corresponding overall ALS gain factor.
1:0	Reserved	00	RW	Reserved.

The ALS gain can be adjusted using by setting the two AGAIN bits as well as the AGAINMAX and AGAINL bits which yields an overall range from ½ x to 128x.

chanhvinh.com

Figure 49:
AGAIN Range

AGAIN[1]	AGAIN[0]	AGAINMAX	AGAINL	Overall ALS Gain
0	0	0	0	½
0	0	0	1	1
0	1	0	1	4
1	0	0	1	16
1	1	0	1	64
1	1	1	1	128

chanhvinh.com

CFG3 Register (Address 0xAB)

Figure 50:
CFG3 Register

Addr: 0xAB		CFG3					
Bit	**Bit Name**	**Default**	**Access**	**Bit Description**			
7	INT_READ_CLEAR	0	RW	If the Interrupt-Clear-by-Read bit is set, then all flag bits in the STATUS register will be reset whenever the STATUS register is read over I^2C.			
6:5	Reserved	00	RW	Reserved.			
4	SAI	0	RW	The Sleep After Interrupt bit is used to place the device into a low power mode upon an interrupt pin assertion.			
				PON	**SAI**	**INT**	**Oscillator**
				0	X	X	OFF
				1	0	X	ON
				1	1	1	ON
				1	1	0	OFF
3:0	Reserved	1100	RW	Reserved.			

The SAI bit sets the device operational mode following the completion of an ALS or proximity cycle. If AINT and AIEN are both set or if PINT and PIEN are both set, causing an interrupt on the INT pin, and the SAI bit is set, then the oscillator will deactivate. The Device will appear as if PON = 0, however, PON will read as 1. The device can only be reactivated (oscillator enabled) by clearing the interrupts in the STATUS register.

chanhvinh.com

POFFSETL Register (Address 0xC0)

Figure 51:
POFFSETL Register

Addr: 0xC0		POFFSETL		
Bit	**Bit Name**	**Default**	**Access**	**Bit Description**
7:0	POFFSETL	0x00	RW	This register contains the magnitude portion of proximity offset adjust value.

Typically, optical and/or electrical crosstalk negatively influence proximity operation and results. The POFFSETL/POFFSETH registers provide a mechanism to remove system crosstalk from the proximity data. POFFSETL and POFFSETH contains the magnitude and sign of a value which adjusts PDATA is generated in the AFE. An offset value in the range of ± 255 is possible.

POFFSETH Register (Address 0xC1)

Figure 52:
POFFSETH Register

Addr: 0xC1		POFFSETH		
Bit	**Bit Name**	**Default**	**Access**	**Bit Description**
7:1	Reserved	0000000	RW	Reserved.
0	POFFSET_SIGN	0	RW	This register contains the sign portion of proximity offset adjust value.

Typically, optical and/or electrical crosstalk negatively influence proximity operation and results. The POFFSETL/POFFSETH registers provide a mechanism to remove system crosstalk from the proximity data. POFFSETL and POFFSETH contains the magnitude and sign of a value which adjusts PDATA is generated in the AFE. An offset value in the range of ± 255 is possible.

chanhvinh.com

AZ_CONFIG Register (Address 0xD6)

Figure 53:
AZ_CONFIG Register

Addr: 0xD6		AZ_CONFIG		
Bit	**Bit Name**	**Default**	**Access**	**Description**
7	Reserved	0	RW	Reserved.
6:0	AZ_NTH_ITERATION	1111111	RW	Run autozero automatically before every nth ALS cycle (00h = never, n = every nth ALS cycle, and 7Fh = only before the first ALS cycle).

chanhvinh.com

CALIB Register (Address 0xD7)

Figure 54:
CALIB Register

Addr: 0xD7		CALIB		
Bit	**Bit Name**	**Default**	**Access**	**Bit Description**
7:6	Reserved	00	RO	Reserved.
5	ELECTRICAL_ CALIBRATION	0	RW	Selects proximity calibration type. 1=Electrical offset only. 0= Calibration compensates for electrical and optical crosstalk.
4:1	Reserved	0000	RW	Reserved.
0	START_OFFSET_ CALIB	0	RW	Set to 1 to start a calibration sequence.

Proximity response in systems with electrical and optical crosstalk may be improved by using the calibration feature. Optical crosstalk is caused when the photodiode receives a small portion of the LED IR which was unintentionally reflected by a surface other than the target. Electrical offset is caused by electrical disturbance in the sensor AFE, and also influences the proximity result. The calibration routine adjusts the value in registers C0 and C1 until the proximity result is as close to BINSRCH_TARGET as possible without becoming zero.

Optical and electrical calibration function identically, except that during an electrical calibration the proximity photodiode is disconnected from the AFE.

An electrical only calibration can be initiated by setting the ELECTRICAL_CALIBRATION and START_OFFSET_CALB bits.

To perform an optical (and electrical) calibration do not set the ELECTRICAL_CALIBRATION bit when setting the START_ OFFSET_CALIB. The CINT flag will assert after calibration has finished.

Upon completion proximity offset registers are automatically loaded with calibration result.

chanhvinh.com

CALIBCFG Register (Address 0xD9)

Figure 55:
CALIBCFG Register

Addr: 0xD9		CALIBCFG			
Bit	**Bit Name**	**Default**	**Access**	**Bit Description**	
7:5	BINSRCH_ TARGET	010	RW	Proximity Result Target.	
				Value	**PDATA Target**
				0	0
				1	1
				2	3
				3	7
				4	15
				5	31
				6	63
				7	127
4	Reserved	0	RW	Reserved.	
3	AUTO_ OFFSET_ADJ	0	RW	The Proximity Auto Offset Adjust bit causes the value in POFFSETL register to decrement when PDATA equals zero at the completion of the proximity cycle.	
2:0	PROX_AVG	000	RW	The Proximity Averaging field defines the number of ADC samples collected and averaged during a cycle which become the proximity result.	
				Value	**Sample Size**
				0	Disable
				1	2
				2	4
				3	8
				4	16
				5	32
				6	64
				7	128

The binary search target field is used by the calibration feature to set the baseline value for PDATA when no target is present. For example, calibration of a device in open air, with no target,

chanhvinh.com

and BINSEARCH_TARGET setting of 4 causes the PDATA value will be approximately 15 counts. This feature is useful because it forces PDATA result to always be above zero.
The PROX_AVG field sets the number of ADC samples that are averaged to calculate the PDATA result.

CALIBSTAT Register (Address 0xDC)

Figure 56:
CALIBSTAT Register

Addr: 0xDC		CALIBSTAT		
Bit	**Bit Name**	**Default**	**Access**	**Bit Description**
7:1	Reserved	0000000	RW	Reserved.
0	CALIB_FINISHED	0	RW	This flag indicates that calibration has finished. It can only be cleared by setting this bit high.

INTENAB Register (Address 0xDD)

Figure 57:
INTENAB Register

Addr: 0xDD		INTENAB		
Bit	**Bit Name**	**Default**	**Access**	**Bit Description**
7	ASIEN	0	RW	ALS Saturation Interrupt Enable.
6	PSIEN	0	RW	Proximity Saturation Interrupt Enable.
	PIEN	0	RW	Proximity Interrupt Enable.
4	AIEN	0	RW	ALS/Color Interrupt Enable.
3	CIEN	0	RW	Calibration Interrupt Enable.
2:0	Reserved	000	RW	Reserved.

chanhvinh.com

Application Information

Schematic

Figure 58:
Typical Applications Circuit

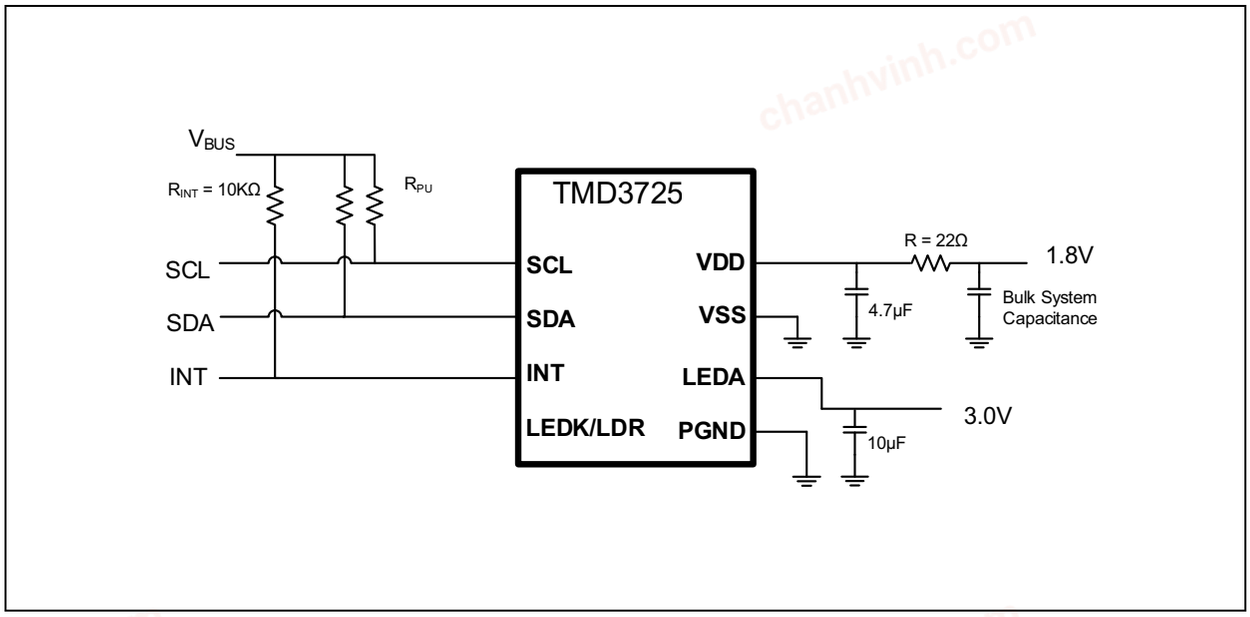

Typical Applications Circuit: It is important to place the 4.7µF (VDD) and 10µF (LEDA) capacitors at the package pins.

Note(s):

1. Place the 4.7µF and 10µF LEDA capacitors within 5mm of the module.
2. The value of the I^2C pull up resistors RPU should be based on the 1.8V bus voltage, system bus speed and trace capacitance.
3. The bulk capacitor can affect the stability of a regulated supply output and should be chosen with the regulator characteristics in mind.
4. VSS and PGND should be connected to the same solid ground plane as close to the device as possible.

chanhvinh.com

PCB Layout

Figure 59:
PCB Layout

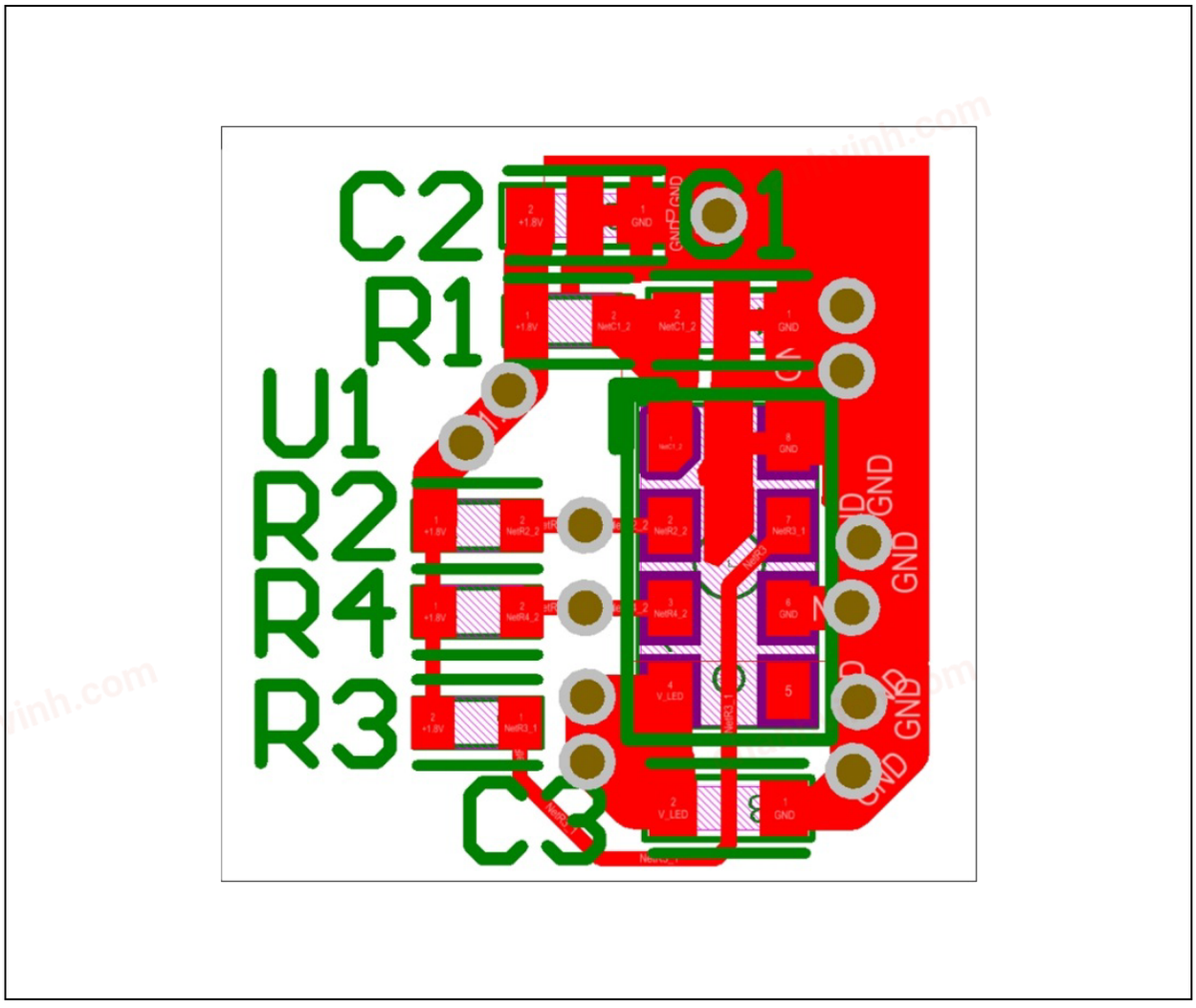

The dominant factor governing device performance is the component placement, not necessarily component value. The placement of the decoupling capacitor, C1, is the most critical. Place the component on the same side of PCB as device as shown in the figure above. Make connection as close as possible to minimize series inductance and resistance. This is critical.

chanhvinh.com

Package Drawings & Markings

Figure 60:
Package Drawings

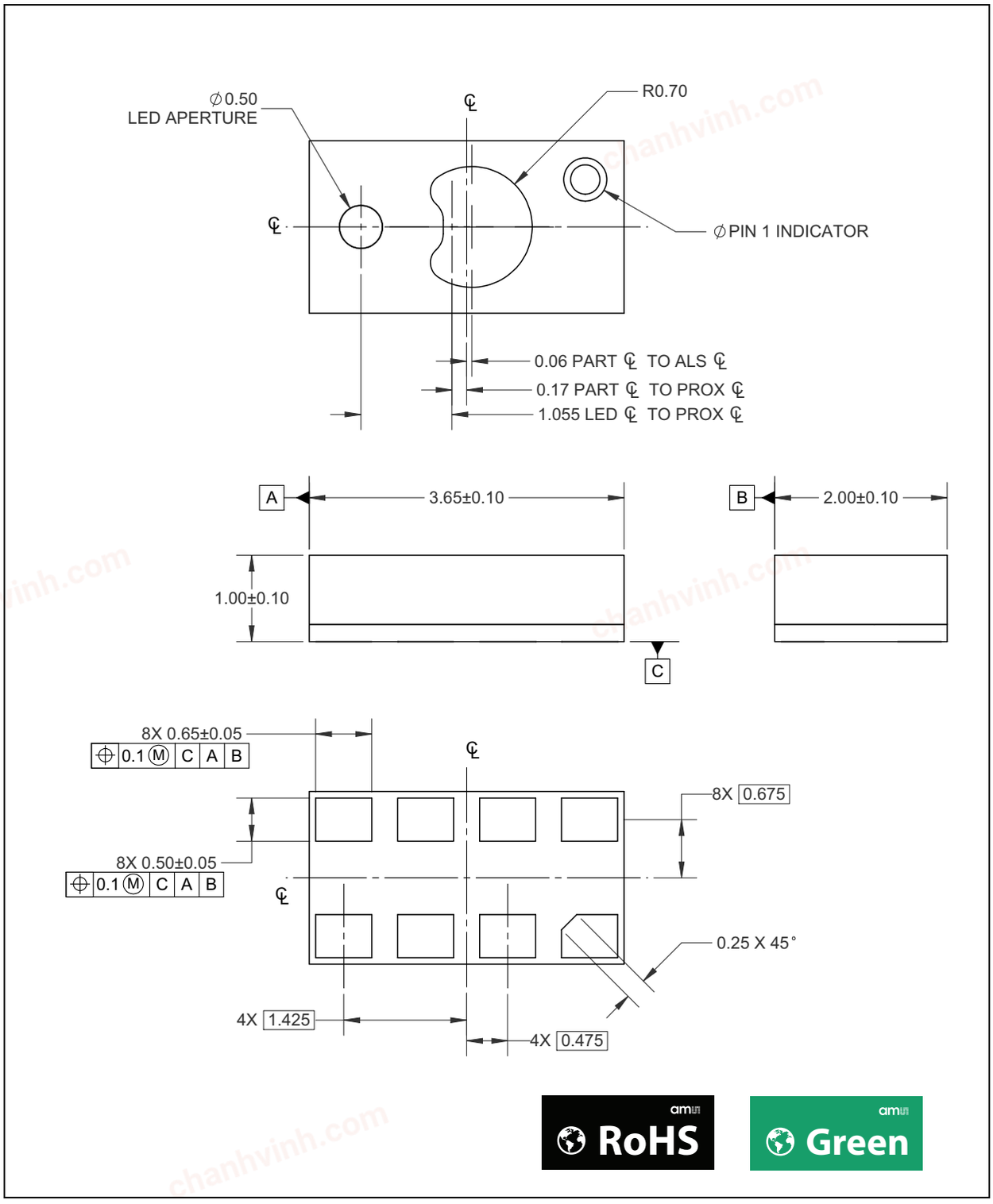

Note(s):

1. All linear dimensions are in millimeters.
2. Contact finish is Au.
3. This package contains no lead (Pb).
4. This drawing is subject to change without notice.

chanhvinh.com

Figure 61:
Recommended PCB Pad Layout

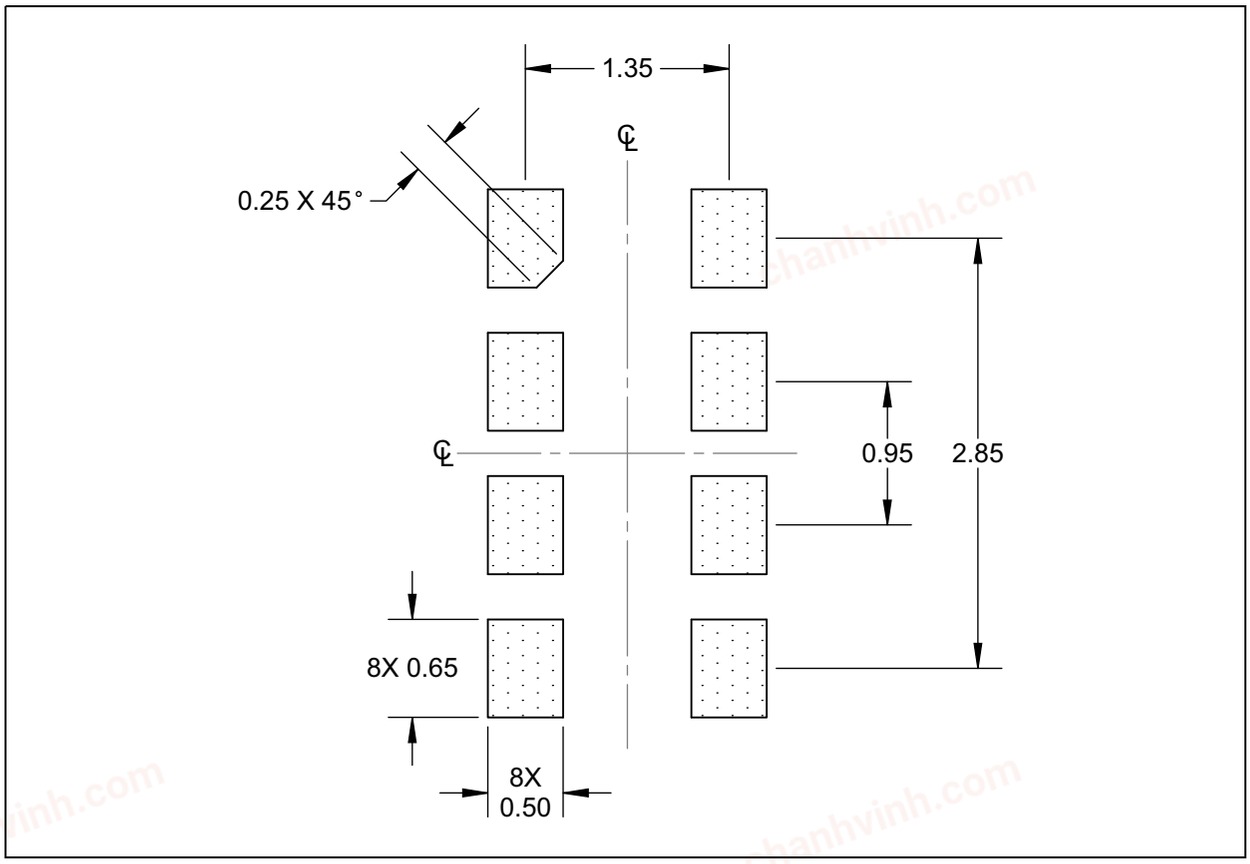

Note(s):

1. All dimensions are in millimeters.
2. Dimension tolerances are 0.05mm unless otherwise noted.
3. This drawing is subject to change without notice.

chanhvinh.com

Tape & Reel Information

Figure 62:
Tape and Reel Information

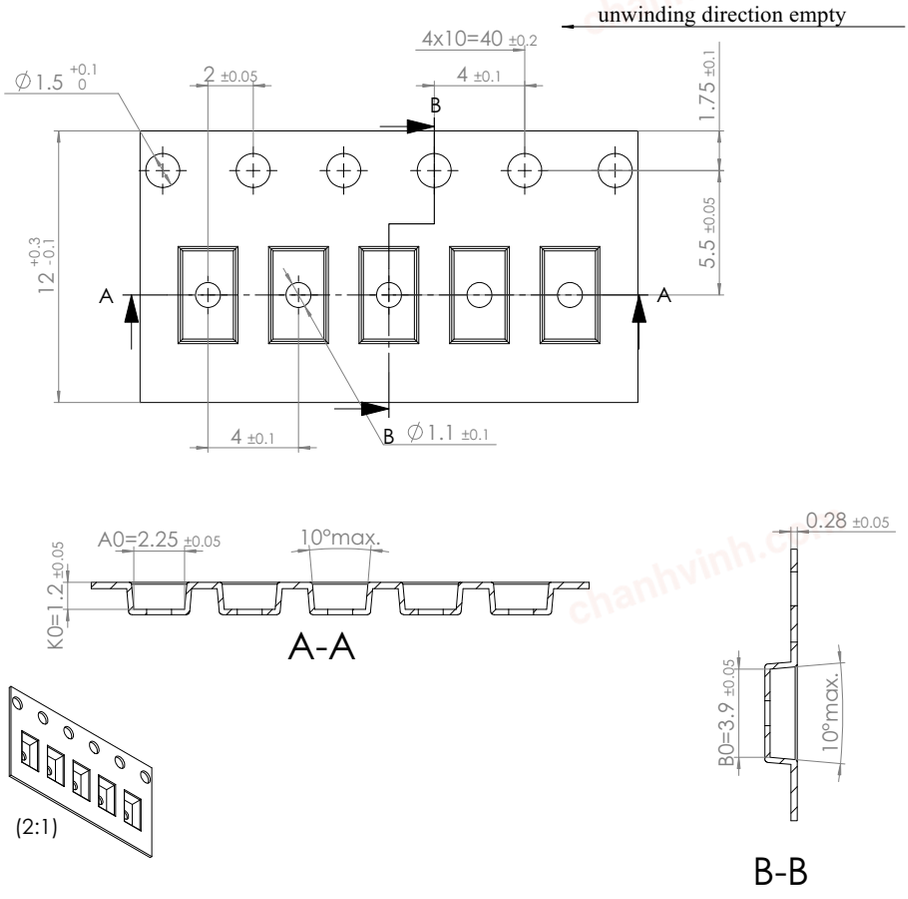

Cover Tape:
Surface Resistance (Top Side) - 10^10 Ohms
Surface Resistance (Adhesive Side) - 10^8 Ohms
Carrier Tape:
Surface Resistance - 10^4 - 10^10 Ohms

Note(s):

1. All linear dimensions are in millimeters.
2. For missing tolerances and dimensions, refer to EIA-481.
3. In accordance with EIA standard, device pin 1 is located next to the sprocket holes in the tape.

chanhvinh.com

Soldering & Storage Information

The module has been tested and has demonstrated an ability to be reflow soldered to a PCB substrate. The solder reflow profile describes the expected maximum heat exposure of components during the solder reflow process of product on a PCB. Temperature is measured on top of component. The components should be limited to a maximum of three passes through this solder reflow profile.

Figure 63:
Solder Reflow Profile

Profile Feature Preheat/ Soak	Sn-Pb Eutectic Assembly	Pb-Free Assembly
Temperature Min (T_{smin})	100 °C	150 °C
Temperature Max (T_{smax})	150 °C	200 °C
Time (t_s) from (T_{smin} to T_{smax})	60-120 seconds	60-120 seconds
Ramp-up rate (T_L to T_P)	3 °C/second max.	3 °C/second max.
Liquidous temperature (T_L) Time (t_L) maintained above T_L	183 °C 60-150 seconds	217 °C 60-150 seconds
Peak package body temperature (T_P)	For users T_P must not exceed the Classification temp of 235 °C For suppliers T_P must equal or exceed the Classification temp of 235 °C	For users T_P must not exceed the Classification temp of 260 °C For suppliers T_P must equal or exceed the Classification temp of 260 °C
Time (t_P) [(1)] within 5 °C of the specified classification temperature (T_c)	20 [(1)] seconds	30 [(1)] seconds
Ramp-down rate (T_P to T_L)	6 °C/second max.	6 °C/second max.
Time 25 °C to peak temperature	6 minutes max.	8 minutes max.

Note(s):

1. Tolerance for peak profile temperature (TP) is defined as a supplier minimum and a user maximum.

chanhvinh.com

Figure 64:
Solder Reflow Profile Graph

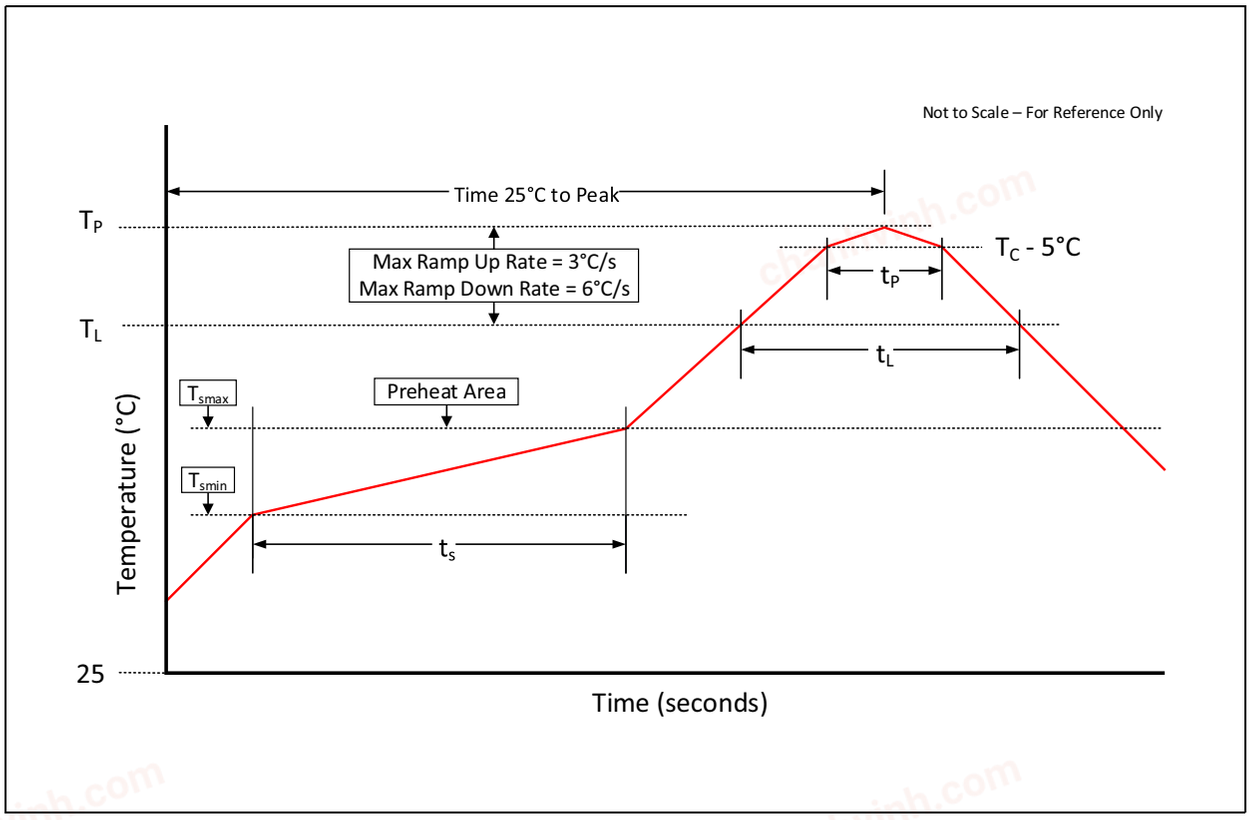

Storage Information

Moisture Sensitivity Optical characteristics of the device can be adversely affected during the soldering process by the release and vaporization of moisture that has been previously absorbed into the package. To ensure the package contains the smallest amount of absorbed moisture possible, each device is baked prior to being dry packed for shipping. Devices are dry packed in a sealed aluminized envelope called a moisture-barrier bag with silica gel to protect them from ambient moisture during shipping, handling, and storage before use.

chanhvinh.com

Shelf Life

The calculated shelf life of the device in an unopened moisture barrier bag is 12 months from the date code on the bag when stored under the following conditions:

- Shelf Life: 12 months
- Ambient Temperature: <40°C
- Relative Humidity: <90%

Rebaking of the devices will be required if the devices exceed the 12 month shelf life or the Humidity Indicator Card shows that the devices were exposed to conditions beyond the allowable moisture region.

Floor Life

The module has been assigned a moisture sensitivity level of MSL 3. As a result, the floor life of devices removed from the moisture barrier bag is 168 hours from the time the bag was opened, provided that the devices are stored under the following conditions:

- Floor Life: 168 hours
- Ambient Temperature: <30°C
- Relative Humidity: <60%

If the floor life or the temperature/humidity conditions have been exceeded, the devices must be rebaked prior to solder reflow or dry packing.

Rebaking Instructions

When the shelf life or floor life limits have been exceeded, rebake at 50°C for 12 hours.

chanhvinh.com

Ordering & Contact Information

Figure 65:
Ordering Information

Ordering Code	I^2C Bus	I^2C Address	Delivery Form	Delivery Quantity
TMD37253	1.8V	39h	Tape & Reel (13”)	10000 pcs/reel

Buy our products or get free samples online at:
www.ams.com/ICdirect

Technical Support is available at:
www.ams.com/Technical-Support

Provide feedback about this document at:
www.ams.com/Document-Feedback

For further information and requests, e-mail us at:
ams_sales@ams.com

For sales offices, distributors and representatives, please visit:
www.ams.com/contact

Headquarters
ams AG
Tobelbader Strasse 30
8141 Premstaetten
Austria, Europe

Tel: +43 (0) 3136 500 0

Website: www.ams.com

chanhvinh.com

RoHS Compliant & ams Green Statement

RoHS: The term RoHS compliant means that ams AG products fully comply with current RoHS directives. Our semiconductor products do not contain any chemicals for all 6 substance categories, including the requirement that lead not exceed 0.1% by weight in homogeneous materials. Where designed to be soldered at high temperatures, RoHS compliant products are suitable for use in specified lead-free processes.

ams Green (RoHS compliant and no Sb/Br): ams Green defines that in addition to RoHS compliance, our products are free of Bromine (Br) and Antimony (Sb) based flame retardants (Br or Sb do not exceed 0.1% by weight in homogeneous material).

Important Information: The information provided in this statement represents ams AG knowledge and belief as of the date that it is provided. ams AG bases its knowledge and belief on information provided by third parties, and makes no representation or warranty as to the accuracy of such information. Efforts are underway to better integrate information from third parties. ams AG has taken and continues to take reasonable steps to provide representative and accurate information but may not have conducted destructive testing or chemical analysis on incoming materials and chemicals. ams AG and ams AG suppliers consider certain information to be proprietary, and thus CAS numbers and other limited information may not be available for release.

chanhvinh.com

Copyrights & Disclaimer

Copyright ams AG, Tobelbader Strasse 30, 8141 Premstaetten, Austria-Europe. Trademarks Registered. All rights reserved. The material herein may not be reproduced, adapted, merged, translated, stored, or used without the prior written consent of the copyright owner.

Devices sold by ams AG are covered by the warranty and patent indemnification provisions appearing in its General Terms of Trade. ams AG makes no warranty, express, statutory, implied, or by description regarding the information set forth herein. ams AG reserves the right to change specifications and prices at any time and without notice. Therefore, prior to designing this product into a system, it is necessary to check with ams AG for current information. This product is intended for use in commercial applications. Applications requiring extended temperature range, unusual environmental requirements, or high reliability applications, such as military, medical life-support or life-sustaining equipment are specifically not recommended without additional processing by ams AG for each application. This product is provided by ams AG “AS IS” and any express or implied warranties, including, but not limited to the implied warranties of merchantability and fitness for a particular purpose are disclaimed.

ams AG shall not be liable to recipient or any third party for any damages, including but not limited to personal injury, property damage, loss of profits, loss of use, interruption of business or indirect, special, incidental or consequential damages, of any kind, in connection with or arising out of the furnishing, performance or use of the technical data herein. No obligation or liability to recipient or any third party shall arise or flow out of ams AG rendering of technical or other services.

chanhvinh.com

Document Status

Document Status	Product Status	Definition
Product Preview	Pre-Development	Information in this datasheet is based on product ideas in the planning phase of development. All specifications are design goals without any warranty and are subject to change without notice
Preliminary Datasheet	Pre-Production	Information in this datasheet is based on products in the design, validation or qualification phase of development. The performance and parameters shown in this document are preliminary without any warranty and are subject to change without notice
Datasheet	Production	Information in this datasheet is based on products in ramp-up to full production or full production which conform to specifications in accordance with the terms of ams AG standard warranty as given in the General Terms of Trade
Datasheet (discontinued)	Discontinued	Information in this datasheet is based on products which conform to specifications in accordance with the terms of ams AG standard warranty as given in the General Terms of Trade, but these products have been superseded and should not be used for new designs

chanhvinh.com

Revision Information

Changes from 1-03 (2017-Oct-26) to current revision 1-05 (2018-Mar-08)	Page
1-03 (2017-Oct-26) to 1-04 (2018-Feb-23)	
Updated ATIME Register (Address 0x81)	20
Updated WTIME Register (Address 0x83)	21
Updated CALIB Register (Address 0xD7)	38
1-04 (2018-Feb-23) to 1-05 (2018-Mar-08)	
Updated Figure 65	49

Note(s):

1. Page and figure numbers for the previous version may differ from page and figure numbers in the current revision.
2. Correction of typographical errors is not explicitly mentioned.

chanhvinh.com

Content Guide

1 General Description
1 Key Benefits & Features
2 Applications
2 Block Diagram

3 Pin Assignment
4 Absolute Maximum Ratings
6 Electrical Characteristics
7 Typical Operating Characteristics

12 Detailed Description
12 Proximity
12 Color and Ambient Light Sense
12 I^2C Characteristics
13 I^2C Write Transaction
13 I^2C Read Transaction
13 Timing Diagrams

14 Principles of Operation
14 System State Machine

17 Register Description
17 Register Overview
19 Detailed Register Description
19 Enable Register (Address 0x80)
20 ATIME Register (Address 0x81)
20 PTIME Register (Address 0x82)
21 WTIME Register (Address 0x83)
21 AILTL Register (Address 0x84)
22 AILTH Register (Address 0x85)
22 AIHTL Register (Address 0x86)
23 AIHTH Register (Address 0x87)
23 PILT Register (Address 0x88)
24 PIHT Register (Address 0x8A)
24 PERS Register (Address 0x8C)
26 CFG0 Register (Address 0x8D)
27 PCFG0 Register (Address 0x8E)
28 PCFG1 Register (Address 0x8F)
29 CFG1 Register (Address 0x90)
29 REVID Register (Address 0x91)
30 ID Register (Address 0x92)
30 Status Register (Address 0x93)
31 CDATAL Register (Address 0x94)
31 CDATAH Register (Address 0x95)
31 RDATAL Register (Address 0x96)
31 RDATAH Register (Address 0x97)
32 GDATAL Register (Address 0x98)
32 GDATAH Register (Address 0x99)
32 BDATAL Register (Address 0x9A)
32 BDATAH Register (Address 0x9B)
33 PDATA Register (Address 0x9C)
33 REVID2 Register (Address 0x9E)
33 CFG2 Register (Address 0x9F)
35 CFG3 Register (Address 0xAB)

chanhvinh.com

36 POFFSETL Register (Address 0xC0)
36 POFFSETH Register (Address 0xC1)
37 AZ_CONFIG Register (Address 0xD6)
38 CALIB Register (Address 0xD7)
39 CALIBCFG Register (Address 0xD9)
40 CALIBSTAT Register (Address 0xDC)
40 INTENAB Register (Address 0xDD)

41 Application Information
41 Schematic
42 PCB Layout

43 Package Drawings & Markings
45 Tape & Reel Information

46 Soldering & Storage Information
47 Storage Information
48 Shelf Life
48 Floor Life
48 Rebaking Instructions

49 Ordering & Contact Information
50 RoHS Compliant & ams Green Statement
51 Copyrights & Disclaimer
52 Document Status
53 Revision Information