chanhvinh.com

SFH 4171S

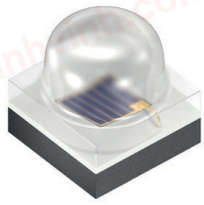

OSLON® P1616 Lens

High Power Infrared Emitter (850 nm)

Applications

- Access Control (IRIS/Vein Scan, Face Recognition)
- Eye Tracking
- Gesture Recognition
- Safety and Security, CCTV

Features:

- Package: clear silicone
- Corrosion Robustness Class: 3B
- ESD: 2 kV acc. to ANSI/ESDA/JEDEC JS-001 (HBM)
- IR lightsource with high efficiency
- Double stack emitter
- Centroid wavelength 850 nm

Ordering Information

Type	Radiant intensity [1)2)] I_F = 1 A; t_p = 10 ms I_e	Radiant intensity [1)] typ. I_F = 1 A; t_p = 10 ms I_e	Ordering Code
SFH 4171S	560 ... 900 mW/sr	680 mW/sr	Q65113A1098

chanhvinh.com

Maximum Ratings

T_A = 25 °C

Parameter	Symbol		Values
Operating temperature	T_{op}	min. max.	-40 °C 105 °C
Storage temperature	T_{stg}	min. max.	-40 °C 105 °C
Junction temperature	T_j	max.	145 °C
Forward current	I_F	max.	1000 mA
Surge current $t_p \leq 600$ µs; D = 0.005	I_{FSM}	max.	2 A
Reverse voltage [3)]	V_R	max.	5 V
Power consumption	P_{tot}	max.	3600 mW
ESD withstand voltage acc. to ANSI/ESDA/JEDEC JS-001 (HBM)	V_{ESD}	max.	2 kV

Note: For the forward current and power consumption please see “maximum permissible forward current” diagram.

chanhvinh.com

Characteristics

I_F = 1000 mA; t_p = 10 ms; T_A = 25 °C

Parameter	Symbol		Values
Peak wavelength	λ_{peak}	typ.	860 nm
Centroid wavelength	$\lambda_{centroid}$	typ.	850 nm
Spectral bandwidth at 50% $I_{rel,max}$ (FWHM)	$\Delta\lambda$	typ.	30 nm
Half angle	φ	typ.	35 °
Dimensions of chip area	L x W	typ.	0.75 x 0.75 mm x mm
Rise time (10% / 90%) I_F = 2 A; R_L = 5 Ω	t_r	typ.	9 ns
Fall time (10% / 90%) I_F = 2 A; R_L = 5 Ω	t_f	typ.	16 ns
Forward voltage [4]	V_F	typ. max.	3.25 V 3.60 V
Forward voltage [4] I_F = 2 A; t_p = 100 µs	V_F	typ. max.	3.7 V 4.3 V
Reverse current [3]	I_R	typ. max.	0.01 µA 10 µA
Total radiant flux [5]	Φ_e	typ.	1150 mW
Temperature coefficient of voltage	TC_V	typ.	-2 mV / K
Temperature coefficient of brightness	TC_I	typ.	-0.3 % / K
Temperature coefficient of wavelength	TC_λ	typ.	0.3 nm / K
Thermal resistance junction solder point electrical [6] with efficiency η_e = 38 %	$R_{thJS\ elec.}$	typ. max.	6.8 K / W 8.1 K / W
Thermal resistance junction solder point real [6]	$R_{thJS\ real}$	typ. max.	11.0 K / W 13.0 K / W

chanhvinh.com

Brightness Groups

Group	Radiant intensity [1)2)] I_F = 1 A; t_p = 10 ms min. I_e	Radiant intensity [1)2)] I_F = 1 A; t_p = 10 ms max. I_e
DB1	560 mW/sr	630 mW/sr
DB2	630 mW/sr	710 mW/sr
EA1	710 mW/sr	800 mW/sr
EA2	800 mW/sr	900 mW/sr

Relative Spectral Emission [7), 8)]

$I_{e,rel} = f(\lambda)$; I_F = 1000 mA; t_p = 10 ms

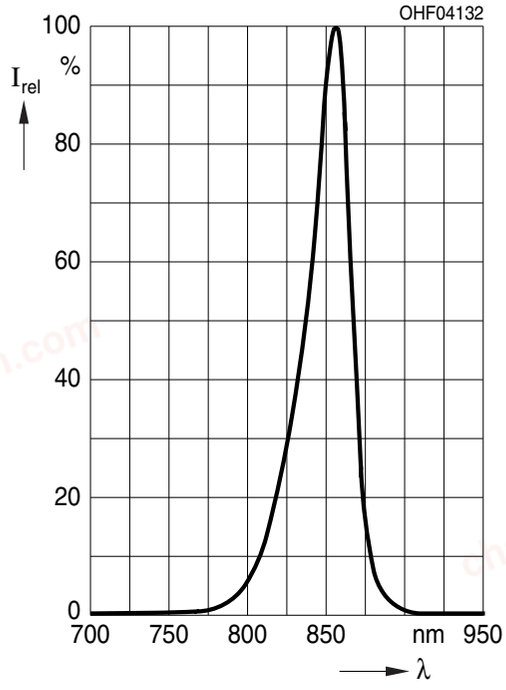

chanhvinh.com

Radiation Characteristics 7), 8)

$I_{e,rel} = f(\varphi)$

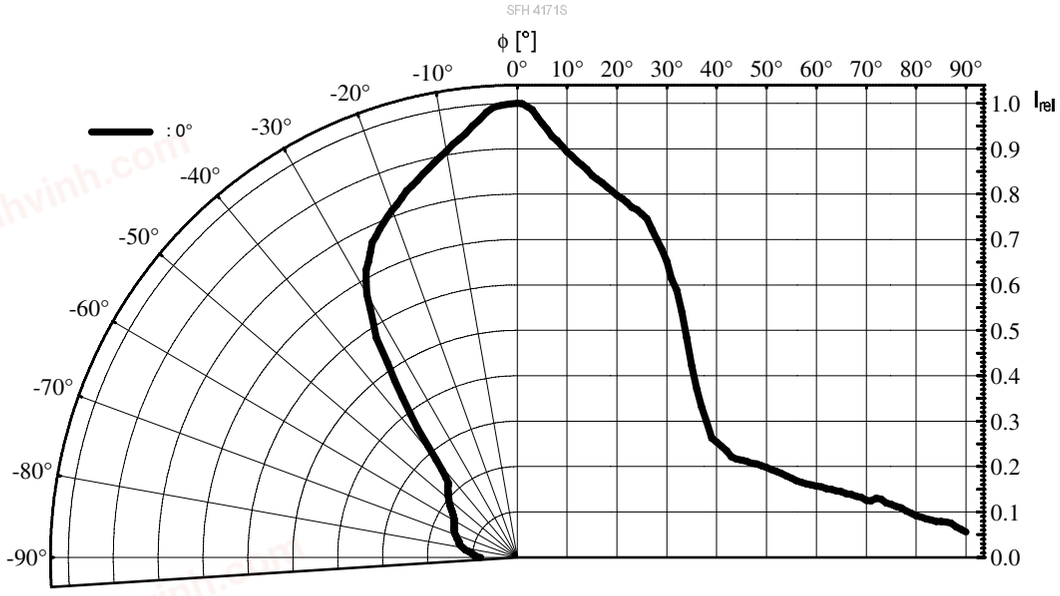

Forward current 7), 8)

$I_F = f(V_F)$; single pulse; $t_p = 100\ \mu s$

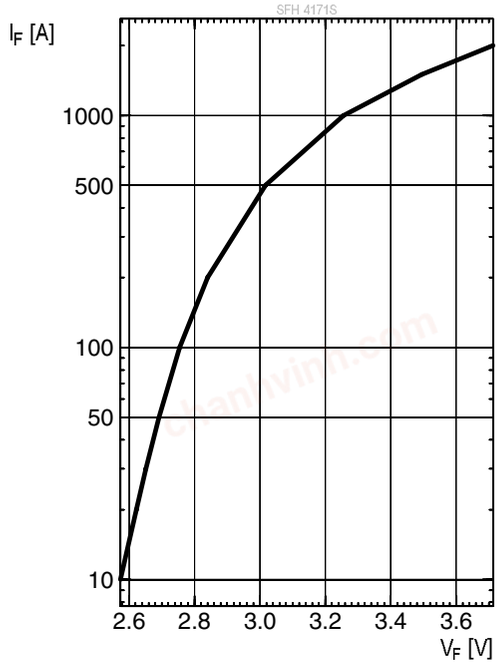

Relative Total Radiant Flux 7), 8)

$\Phi_e/\Phi_e(1000mA) = f(I_F)$; single pulse; $t_p = 100\ \mu s$

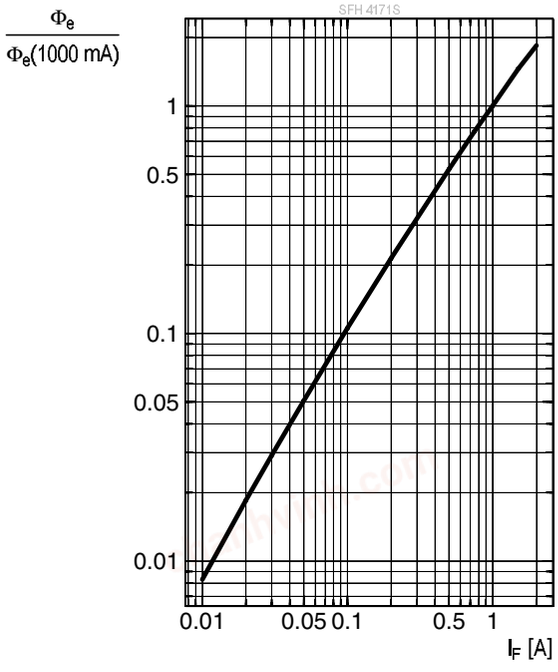

chanhvinh.com

Max. Permissible Forward Current

$I_{F,max}$ = f (T_S); Rth_{js} = 13K / W

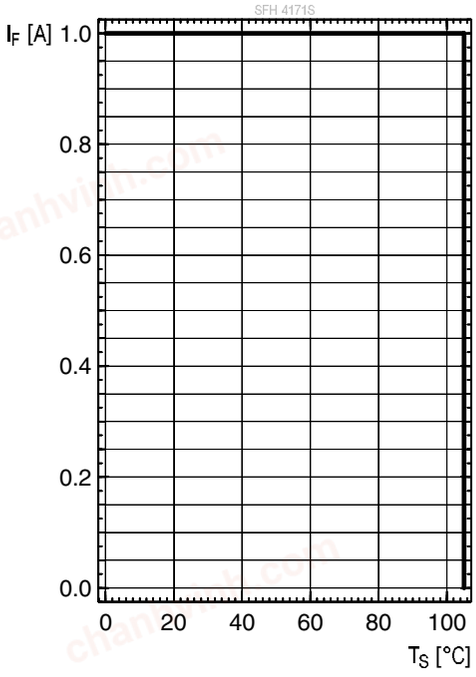

Permissible Pulse Handling Capability

I_F = f (t_p); D = parameter; T_S = 85°C

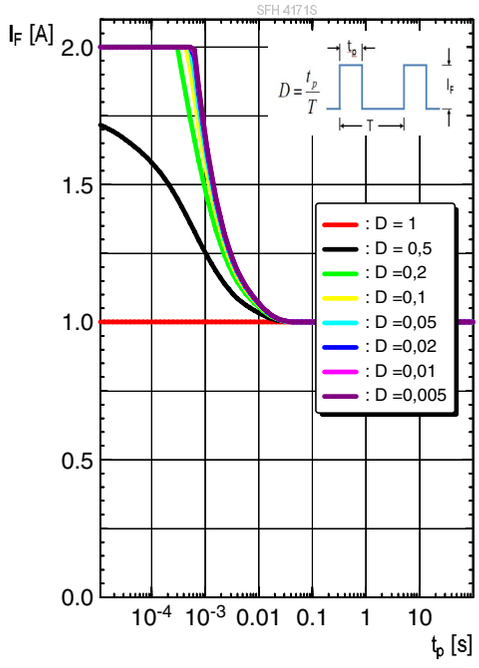

chanhvinh.com

Dimensional Drawing [9)]

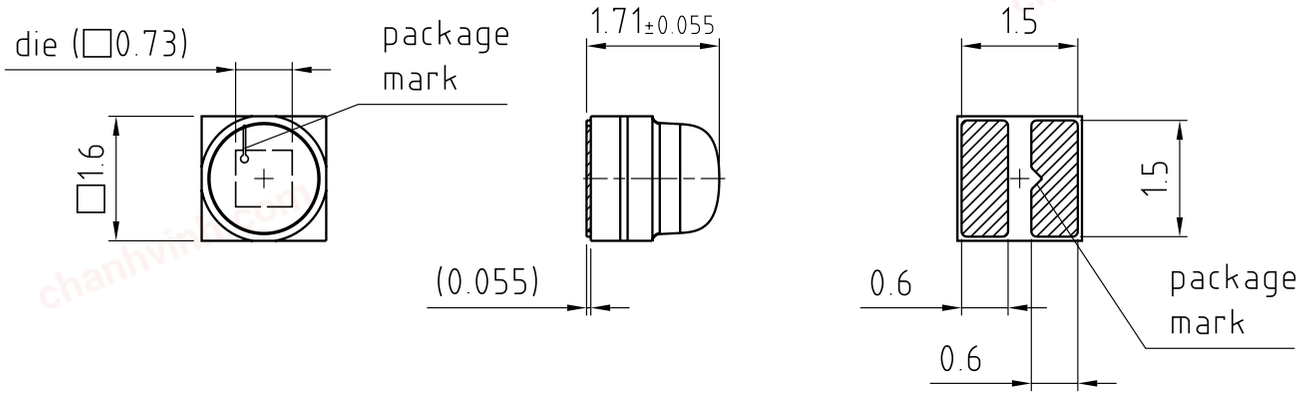

general tolerance ± 0.05
lead finish Au

C63062-A4399-A4-01

Further Information:

Approximate Weight: 7.6 mg

Package marking: Cathode

Corrosion test: Class: 3B
Test condition: 40°C / 90 % RH / 15 ppm H_2S / 14 days (stricter than IEC 60068-2-43)

chanhvinh.com

Recommended Solder Pad 9)

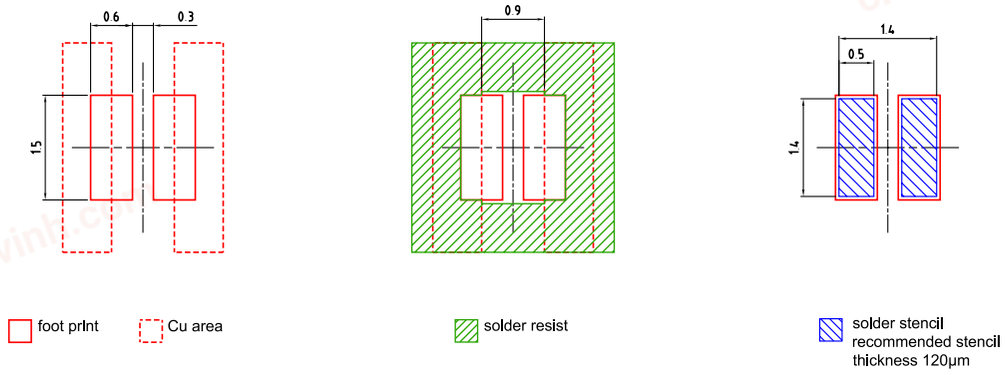

Component Location on Pad

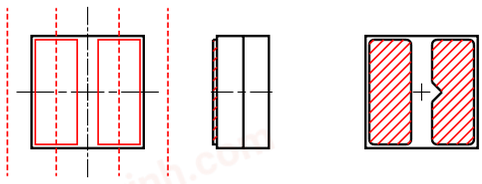

E062.3010.272 -01

chanhvinh.com

Reflow Soldering Profile

Product complies to MSL Level 2 acc. to JEDEC J-STD-020E

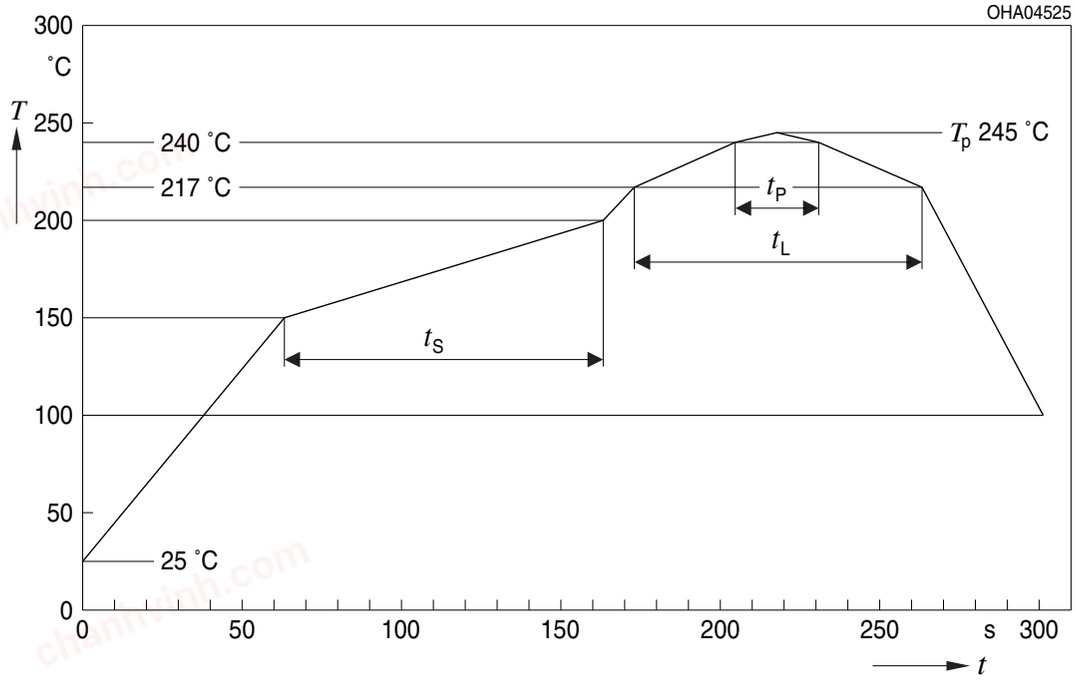

Profile Feature	Symbol	Pb-Free (SnAgCu) Assembly			Unit
		Minimum	Recommendation	Maximum	
Ramp-up rate to preheat*) 25 °C to 150 °C			2	3	K/s
Time t_S T_{Smin} to T_{Smax}	t_S	60	100	120	s
Ramp-up rate to peak*) T_{Smax} to T_P			2	3	K/s
Liquidus temperature	T_L		217		°C
Time above liquidus temperature	t_L		80	100	s
Peak temperature	T_P		245	260	°C
Time within 5 °C of the specified peak temperature T_P - 5 K	t_P	10	20	30	s
Ramp-down rate* T_P to 100 °C			3	6	K/s
Time 25 °C to T_P				480	s

All temperatures refer to the center of the package, measured on the top of the component
* slope calculation DT/Dt: Dt max. 5 s; fulfillment for the whole T-range

chanhvinh.com

Taping [9)]

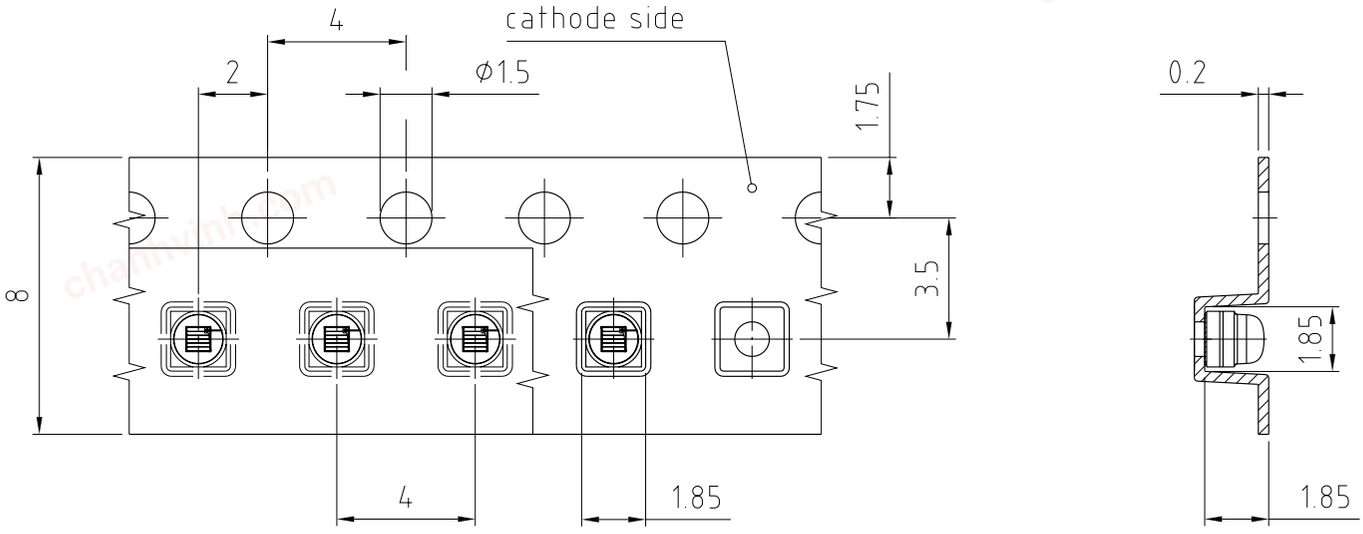

C63062-A4399-B7-01

chanhvinh.com

Tape and Reel [10)]

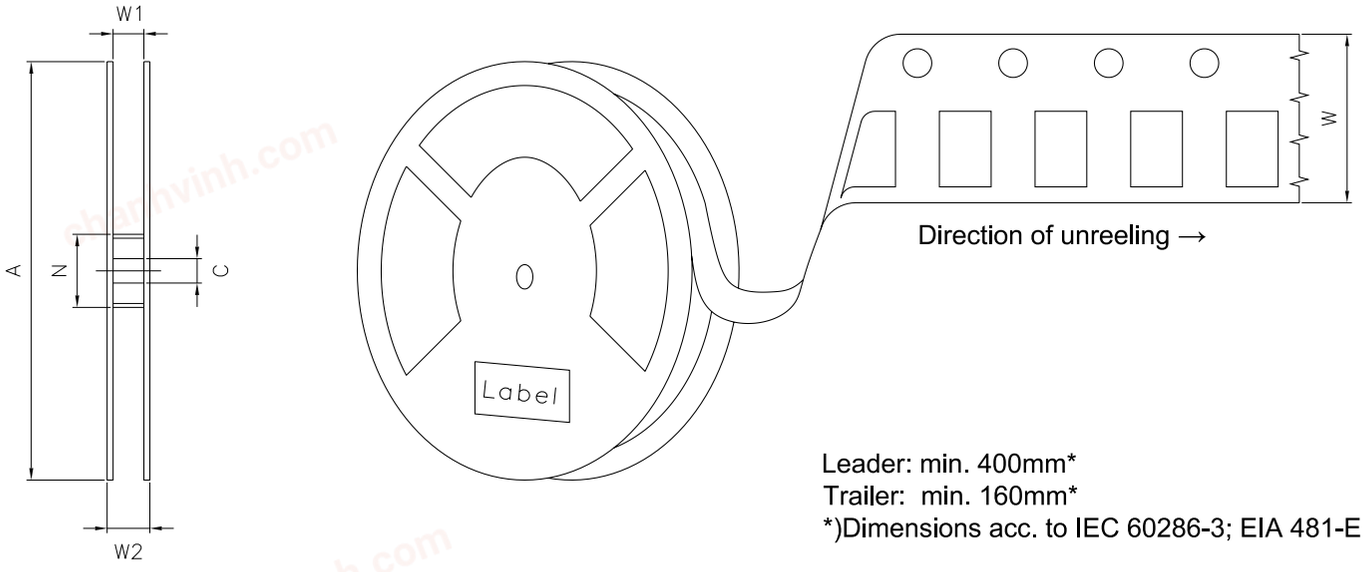

Leader: min. 400mm*
Trailer: min. 160mm*
*)Dimensions acc. to IEC 60286-3; EIA 481-E

Reel Dimensions

A	W	N_{min}	W_1	$W_{2\,max}$	Pieces per PU
180 mm	8 + 0.3 / - 0.1 mm	60 mm	8.4 + 2 mm	14.4 mm	2000

chanhvinh.com

Barcode-Product-Label (BPL)

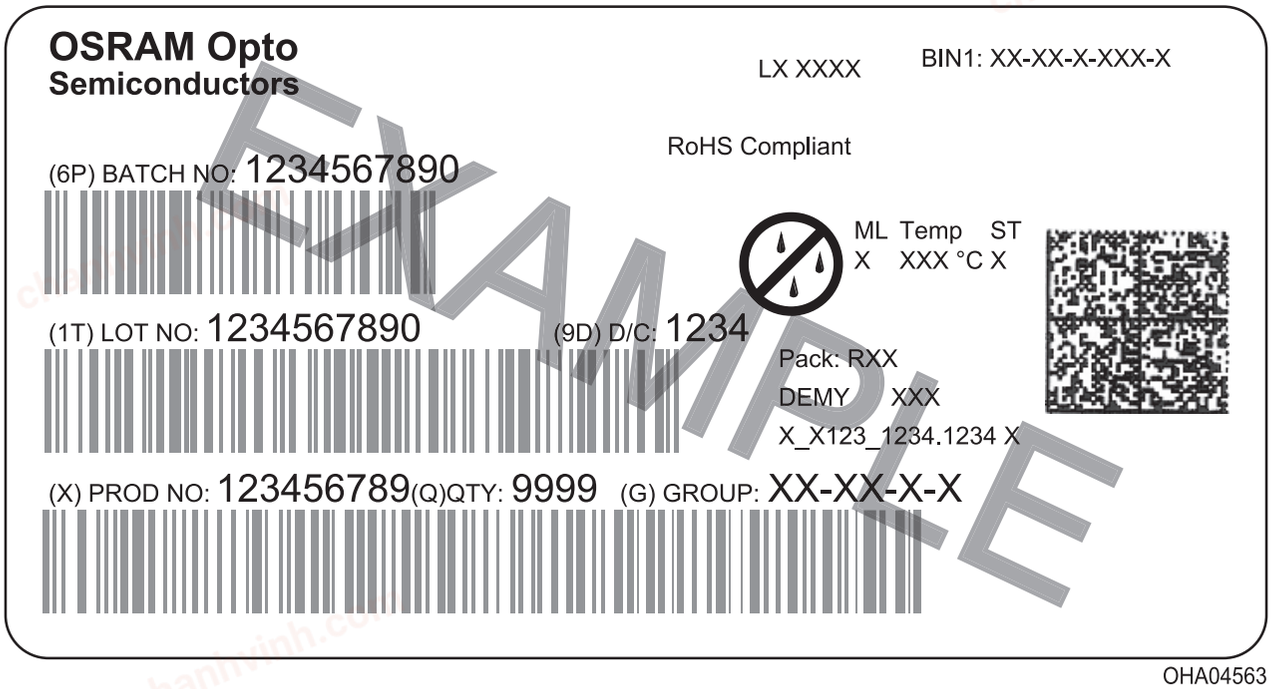

OHA04563

Dry Packing Process and Materials

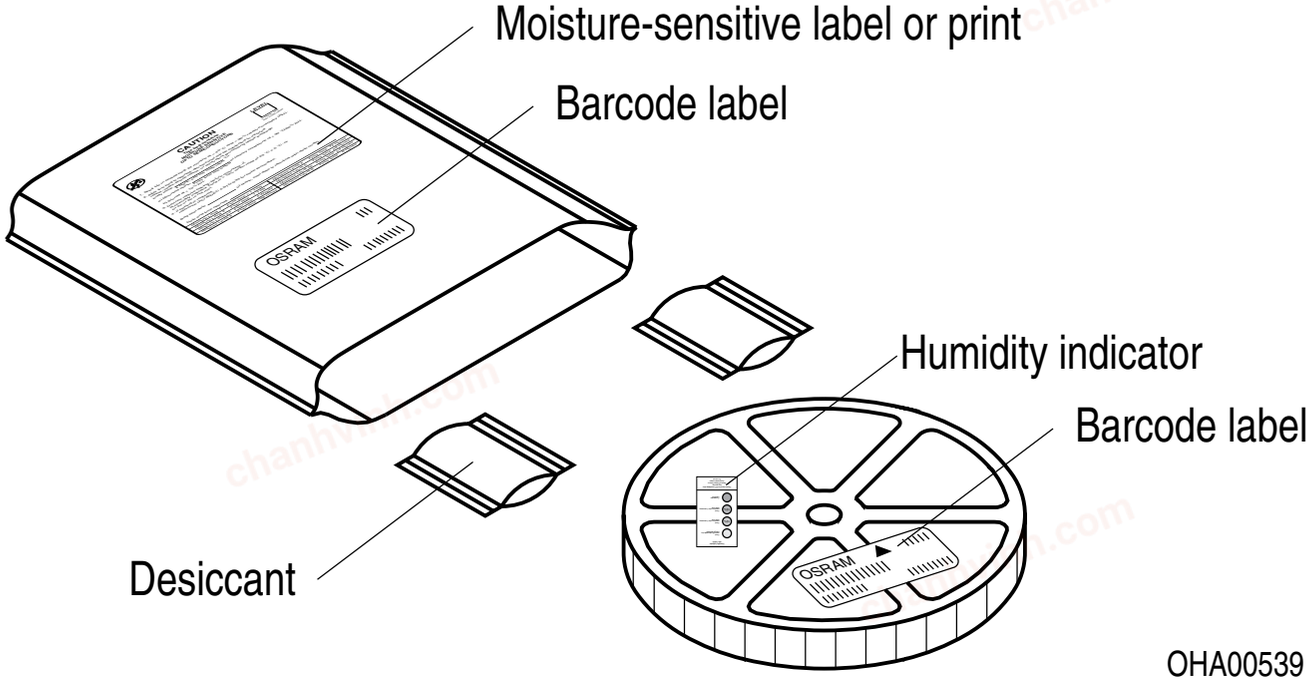

OHA00539

Moisture-sensitive product is packed in a dry bag containing desiccant and a humidity card according JEDEC-STD-033.

chanhvinh.com

Notes

The evaluation of eye safety occurs according to the standard IEC 62471:2006 (photo biological safety of lamps and lamp systems). Within the risk grouping system of this IEC standard, the device specified in this data sheet fall into the class **exempt group (exposure time 10000 s)**. Under real circumstances (for exposure time, conditions of the eye pupils, observation distance), it is assumed that no endangerment to the eye exists from these devices. As a matter of principle, however, it should be mentioned that intense light sources have a high secondary exposure potential due to their blinding effect. When looking at bright light sources (e.g. headlights), temporary reduction in visual acuity and afterimages can occur, leading to irritation, annoyance, visual impairment, and even accidents, depending on the situation.

Subcomponents of this device contain, in addition to other substances, metal filled materials including silver. Metal filled materials can be affected by environments that contain traces of aggressive substances. Therefore, we recommend that customers minimize device exposure to aggressive substances during storage, production, and use. Devices that showed visible discoloration when tested using the described tests above did show no performance deviations within failure limits during the stated test duration. Respective failure limits are described in the IEC60810.

Handling:
Solvents, water, liquids, non-conductive plastics and glues are not allowed near the device, because solvents and other liquids could emerge and damage the product.

For further application related information please visit www.osram-os.com/appnotes

chanhvinh.com

Disclaimer

Attention please!
The information describes the type of component and shall not be considered as assured characteristics.
Terms of delivery and rights to change design reserved. Due to technical requirements components may contain dangerous substances.
For information on the types in question please contact our Sales Organization.
If printed or downloaded, please find the latest version on the OSRAM OS website.

Packing
Please use the recycling operators known to you. We can also help you – get in touch with your nearest sales office. By agreement we will take packing material back, if it is sorted. You must bear the costs of transport. For packing material that is returned to us unsorted or which we are not obliged to accept, we shall have to invoice you for any costs incurred.

Product and functional safety devices/applications or medical devices/applications
OSRAM OS components are not developed, constructed or tested for the application as safety relevant component or for the application in medical devices.
OSRAM OS products are not qualified at module and system level for such application.

In case buyer – or customer supplied by buyer – considers using OSRAM OS components in product safety devices/applications or medical devices/applications, buyer and/or customer has to inform the local sales partner of OSRAM OS immediately and OSRAM OS and buyer and /or customer will analyze and coordinate the customer-specific request between OSRAM OS and buyer and/or customer.

chanhvinh.com

Glossary

1) **Radiant intensity:** Measured at a solid angle of Ω = 0.01 sr

2) **Brightness:** The brightness values are measured with a tolerance of ±11%.

3) **Reverse Operation:** This product is intended to be operated applying a forward current within the specified range. Applying any continuous reverse bias or forward bias below the voltage range of light emission shall be avoided because it may cause migration which can change the electro-optical characteristics or damage the LED.

4) **Forward Voltage:** The forward voltages are measured with a tolerance of ±0.1 V.

5) **Total radiant flux:** Measured with integrating sphere.

6) **Thermal resistance:** junction - soldering point, of the device only, mounted on an ideal heatsink (e.g. metal block)

7) **Typical Values:** Due to the special conditions of the manufacturing processes of semiconductor devices, the typical data or calculated correlations of technical parameters can only reflect statistical figures. These do not necessarily correspond to the actual parameters of each single product, which could differ from the typical data and calculated correlations or the typical characteristic line. If requested, e.g. because of technical improvements, these typ. data will be changed without any further notice.

8) **Testing temperature:** TA = 25°C (unless otherwise specified)

9) **Tolerance of Measure:** Unless otherwise noted in drawing, tolerances are specified with ±0.1 and dimensions are specified in mm.

10) **Tape and Reel:** All dimensions and tolerances are specified acc. IEC 60286-3 and specified in mm.

chanhvinh.com

Revision History

Version	Date	Change
1.0	2021-05-11	Initial Version

chanhvinh.com

chanhvinh.com

chanhvinh.com

Published by OSRAM Opto Semiconductors GmbH
Leibnizstraße 4, D-93055 Regensburg
www.osram-os.com © All Rights Reserved.

EU RoHS and China RoHS compliant product

此产品符合欧盟 RoHS 指令的要求；
按照中国的相关法规和标准，不含有毒有害物质或元素。