

CB243A
Battery Charger

Features:

- Input: Single-phase 115 - 230 - 277 VAC
- Output: Battery charging 24 VDC; 3 A
- Suited for the following battery types:
  Open Lead Acid, Sealed Lead Acid, lead Gel and Ni-Cd (option)
- Automatic diagnostic of battery status. Charging curve IUoUo, constant voltage and current
- Switching technology, output voltage 28.8 VDC
- Three charging levels: Boost, Trickle, Recovery.
- Protected against short circuit, inverted polarity, over load.
- Signal output (contact free) for fault battery state
- Protection degree IP20 - DIN rail mountable

INPUT

BATTERY OUTPUT

GENERAL DATA

ENVIRONMENT

SAFETY & EMC

OTHERS

Cat. No.	CB243A
Input Data	
Nominal Input Voltage (2 x VAC)	115 ~ 230 ~ 277 VAC
Input Voltage range (VAC)	90 ~ 305 VAC
Inrush Current (Vn and In Load) I2t	≤ 7 A ≤ 5 msec.
Frequency	47 ~ 63 Hz ±6%
Input Current	(115 ~ 230 VAC) 1 ~ 0.7 A
Internal Fuse	4 A
External Fuse (recommended)	10 A (MCB curve B)
Battery Output (Battery Care)	
Boost charge (25°C) (typ. at I_n)	28.8 VDC
Max. time Bust Charge (tpy. at I_n)	15 h
Min. time Bust Charge (tpy. at I_n)	70 min.
Trickle charge (25°C) (typ. at I_n)	27.5 VDC
Recovery Charge	2 ~ 16 VDC
Charging. Max I_{batt} (I_n)	3 A ±5%
Adjustable charging current I_{adj} (% In)	20 – 100
Efficiency (50% - I_n)	81%
Quiescent Current	≤ 100 mA
Charging Curve automatic: IUoUo	3 stage
Detection of element in short circuit	Yes
Short-circuit protection	Yes
Over Load protection	Yes
Over Voltage Output protection	Yes
Jumper Configuration battery type	2.23;2,25;2,27;2,3;
(V cell) Ni-Cd (optional)	1,41–1,5 (20 elem.)
General Data	
Insulation voltage (In /Out)	3000 VAC
Insulation voltage (In / PE)	1605 VAC
Insulation voltage (Out / PE)	500 VAC
Protection Class (EN/IEC 60529)	IP20
Protection class	I, with PE connected
Reliability: MTBF IEC 61709	> 300.000 hours
Pollution Degree Environment	2
Connection Terminal Blocks screw Type	2,5mm(24–14AWG)
Dimensions (W-H-D)	45x100x100 mm (1.78 x 3.94 x 3.94 in.)
Weight	0.30 Kg approx. (0.66 lbs.)
Climate Data	
Ambient temperature (operation)	-25 - +70°C (-13~158°F)
De Rating Ta > 50°C	- 2.5%(In) / °C
Ambient temperature Storage	-40 - +85°C (-40~185°F)
Humidity at 25°C no condensation	95% to 25°C
Cooling	Auto Convention
Norms and Certifications	
Conforming to:	IEC/EN 60335-2-29,EN60950/UL1950, Electrical safety, 89/336/EEC, EMC Directive, 2006/95/EC (Low Voltage),DIN41773 (Charging cycle), Emission:IEC 61000-6-4,Immunity: IEC 61000-6-2.CE
Signal Output (free switch contact)	
Main or Backup Power	Yes
Low Battery	Yes
Fault Battery	Yes
Type of Signal Output Contact	
Max. current can be switched (EN60947.4.1):	
Max. DC1: 30 VDC 1 A; AC1: 60 VAC 1A	Resistive load
Min.1mA at 5 VDC	Min load

For the latest on Altech Power Supply specifications please visit www.altechcorp.com/power.

chanhvinh.com

CB243A
Battery Charger

Altech Corp.®

Technical Features

The CB series battery chargers are designed with advanced multi-stage battery charging method, completely automatic and suited to meet the most advanced requirements of battery manufacturers. The Battery Care concept is base on algorithms that implement rapid and automatic charging, battery charge optimization during time, flat batteries recovery and real time diagnostic during installation and operation. The Real Time Autodiagnostic system, monitoring battery faults such as, elements in short circuit, accidental reverse polarity connection, disconnection of the battery, they can easily be detected and removed by help of Blink Code of Diagnosis Led; during the installation and after sell. Each device is suited for all battery types, by means of jumpers it is possible setting predefined curves for Open Lead Acid, Sealed Lead Acid, Gel, Ni-Cd(option). They are programmed for two charging levels, boost and trickle. A rugged casing with bracket for DIN rail mounting provide IP20 protection degree. They are extremely compact and cost-effective.

Charging

Automatic multi-stage charging and real time diagnostic allow fast recharge and recovery of deep discharged batteries, adding value and reliability to the system hosting. Type of charging is Voltages and current stabilized IUoUo. The state of charging battery and Autodiagnosis of the systems are identified by a flashing code on a Diagnosis LED and Fault Battery LED:

	State	Diagnosis LED	Battery Fault LED
Charging Type	Trickle	1 Blink/sec	OFF
	Boost	2 Blink/sec	OFF
	Recovery	5 Blink/sec	OFF
Auto diagnosis	Reverse polarity	1 Blink	ON
	Battery No connect	2 Blink	ON
	Element in Short C.	3 Blink	ON
	Replace Battery	5 Blink	ON

Wiring Terminals and Jumper Settings

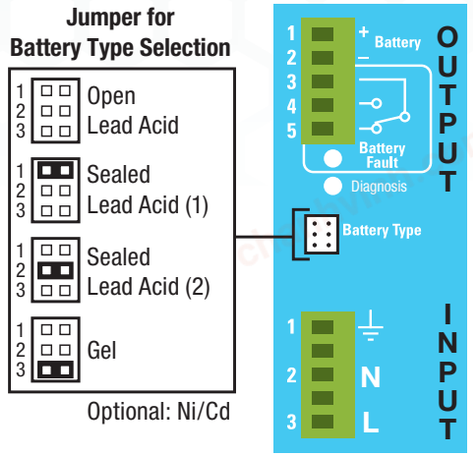

Wiring Diagram

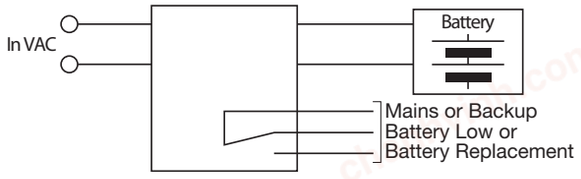

CB Charging Diagram

