chanhvinh.com

Revision History

AS4C32M16D1 - 60-Ball, 8x13x1.2 mm (max) TFBGA PACKAGE

Revision	Details	Date
Rev 1.0	Preliminary datasheet	August 2014
Rev 1.1	Add t_{RAP} in table 16 & Add 'PART NUMBERING SYSTEM'	February 2018

chanhvinh.com

AS4C32M16D1

32M x 16 bit DDR Synchronous DRAM (SDRAM)

TFBGA option - Advanced (Rev. 1.1, Feb. /2018)

Features

- Fast clock rate: 200MHz
- Differential Clock CK & $\overline{CK}$
- Bi-directional DQS
- DLL enable/disable by EMRS
- Fully synchronous operation
- Internal pipeline architecture
- Four internal banks, 8M x 16-bit for each bank
- Programmable Mode and Extended Mode registers
  - CAS Latency: 2, 2.5, 3
  - Burst length: 2, 4, 8
  - Burst Type: Sequential & Interleaved
- Individual bytes write mask control
- DM Write Latency = 0
- Auto Refresh and Self Refresh
- 8192 refresh cycles / 64ms
- Precharge & active power down
- Power supplies: V_{DD} & V_{DDQ} = 2.5V ± 0.2V
- Operating temperature range
  - Commercial (0° ~ 70°C)
  - Industrial (-40° ~ 85°C)
- Interface: SSTL_2 I/O Interface
- Package: 60-Ball, 8x13x1.2 mm (max) TFBGA
  - Pb free and Halogen Free

All parts are ROHS compliant

Overview

The AS4C32M16D1 is a high-speed CMOS double data rate synchronous DRAM containing 512 Mbits. It is internally configured as a quad 8M x 16 DRAM with a synchronous interface (all signals are registered on the positive edge of the clock signal, CK). Data outputs occur at both rising edges of CK and $\overline{CK}$. Read and write accesses to the SDRAM are burst oriented; accesses start at a selected location and continue for a programmed number of locations in a programmed sequence. Accesses begin with the registration of a BankActivate command which is then followed by a Read or Write command. The device provides programmable Read or Write burst lengths of 2, 4, or 8. An auto precharge function may be enabled to provide a self-timed row precharge that is initiated at the end of the burst sequence. The refresh functions, either Auto or Self Refresh are easy to use. In addition, 512Mb DDR features programmable DLL option. By having a programmable mode register and extended mode register, the system can choose the most suitable modes to maximize its performance. These devices are well suited for applications requiring high memory band width; result in a device particularly well suited to high performance main memory and graphics applications.

Table 1.Ordering Information

Part Number	Clock	Data Rate	Package	Temperature	Temp Range
AS4C32M16D1-5BCN	200MHz	400Mbps/pin	60 ball TFBGA	Commercial	0 ~ 70°C
AS4C32M16D1-5BIN	200MHz	400Mbps/pin	60 ball TFBGA	Industrial	-40 ~ 85°C

B: indicates FBGA package
C: indicates Commercial temp.
I: indicates Industrial temp.
N: indicates lead free ROHS

chanhvinh.com

Figure 1. Ball Assignment (Top View)

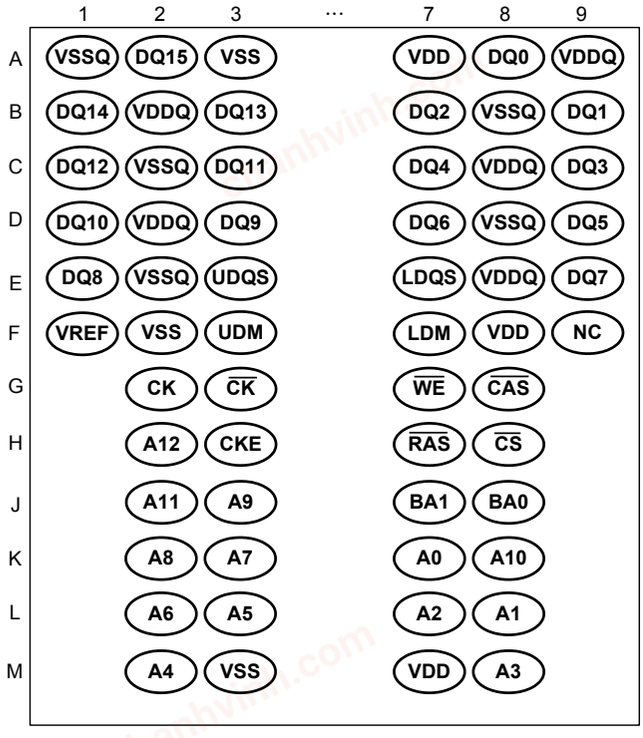

chanhvinh.com

Figure 2. Block Diagram

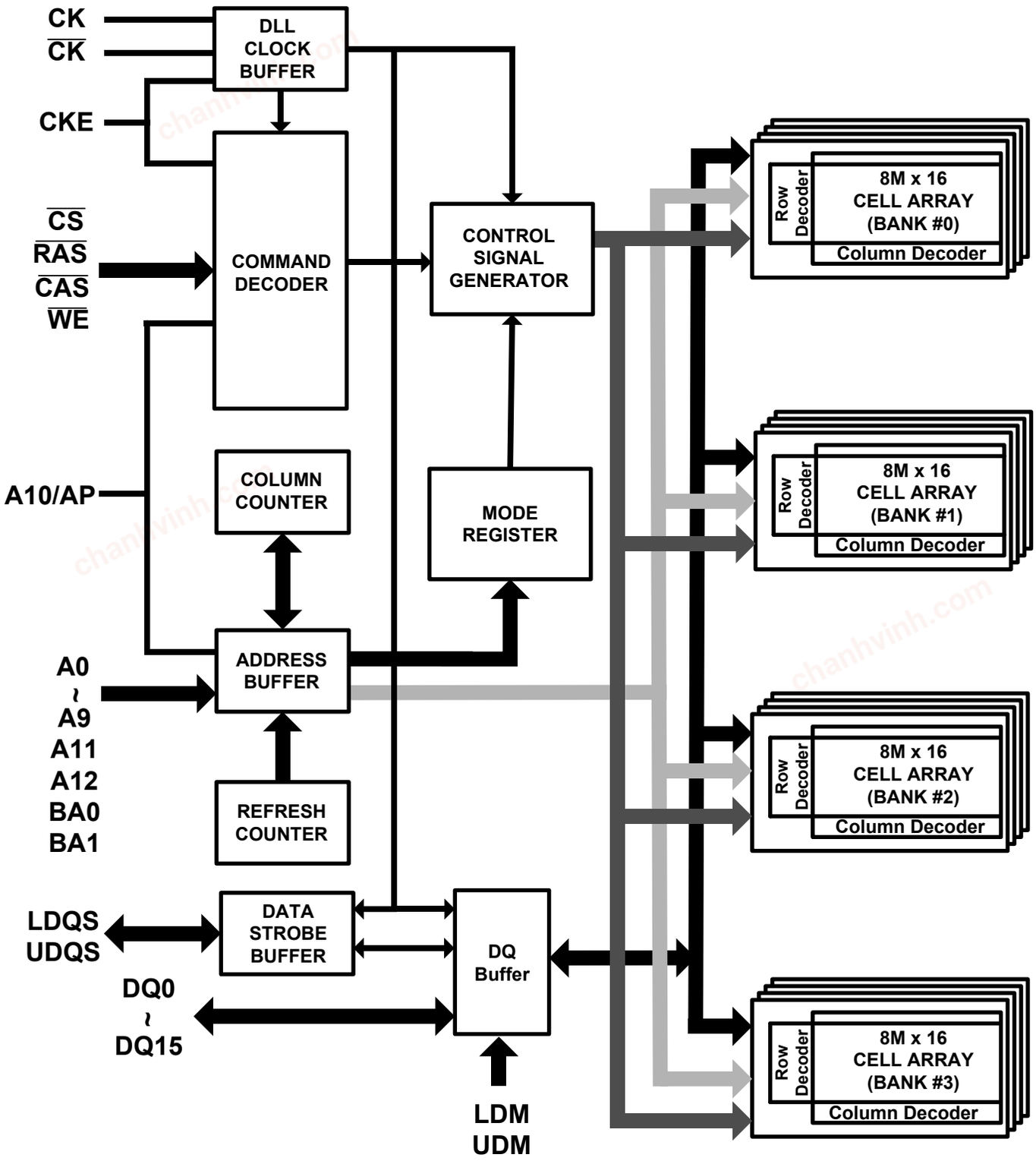

chanhvinh.com

Pin Descriptions

Table 2. Pin Details

Symbol	Type	Description
CK, $\overline{CK}$	Input	**Differential Clock:** CK and $\overline{CK}$ are differential clock inputs. All address and control input signals are sampled on the crossing of the positive edge of CK and negative edge of $\overline{CK}$. Input and output data is referenced to the crossing of CK and $\overline{CK}$ (both directions of the crossing)
CKE	Input	**Clock Enable:** CKE activates (HIGH) and deactivates (LOW) the CK signal. If CKE goes low synchronously with clock, the internal clock is suspended from the next clock cycle and the state of output and burst address is frozen as long as the CKE remains low. When all banks are in the idle state, deactivating the clock controls the entry to the Power Down and Self Refresh modes.
BA0, BA1	Input	**Bank Activate:** BA0 and BA1 define to which bank the BankActivate, Read, Write, or BankPrecharge command is being applied.
A0-A12	Input	**Address Inputs:** A0-A12 are sampled during the BankActivate command (row address A0-A12) and Read/Write command (column address A0-A9 with A10 defining Auto Precharge).
$\overline{CS}$	Input	**Chip Select:** $\overline{CS}$ enables (sampled LOW) and disables (sampled HIGH) the command decoder. All commands are masked when $\overline{CS}$ is sampled HIGH. $\overline{CS}$ provides for external bank selection on systems with multiple banks. It is considered part of the command code.
$\overline{RAS}$	Input	**Row Address Strobe:** The $\overline{RAS}$ signal defines the operation commands in conjunction with the $\overline{CAS}$ and $\overline{WE}$ signals and is latched at the positive edges of CK. When $\overline{RAS}$ and $\overline{CS}$ are asserted "LOW" and $\overline{CAS}$ is asserted "HIGH," either the BankActivate command or the Precharge command is selected by the $\overline{WE}$ signal. When the $\overline{WE}$ is asserted "HIGH," the BankActivate command is selected and the bank designated by BA is turned on to the active state. When the $\overline{WE}$ is asserted "LOW," the Precharge command is selected and the bank designated by BA is switched to the idle state after the precharge operation.
$\overline{CAS}$	Input	**Column Address Strobe:** The $\overline{CAS}$ signal defines the operation commands in conjunction with the $\overline{RAS}$ and $\overline{WE}$ signals and is latched at the positive edges of CK. When $\overline{RAS}$ is held "HIGH" and $\overline{CS}$ is asserted "LOW," the column access is started by asserting $\overline{CAS}$ "LOW." Then, the Read or Write command is selected by asserting $\overline{WE}$ "HIGH" or “LOW”.
$\overline{WE}$	Input	**Write Enable:** The $\overline{WE}$ signal defines the operation commands in conjunction with the $\overline{RAS}$ and $\overline{CAS}$ signals and is latched at the positive edges of CK. The $\overline{WE}$ input is used to select the BankActivate or Precharge command and Read or Write command.
LDQS, UDQS	Input / Output	**Bidirectional Data Strobe:** Specifies timing for Input and Output data. Read Data Strobe is edge triggered. Write Data Strobe provides a setup and hold time for data and DQM. LDQS is for DQ0~7, UDQS is for DQ8~15.
LDM, UDM	Input	**Data Input Mask:** Input data is masked when DM is sampled HIGH during a write cycle. LDM masks DQ0-DQ7, UDM masks DQ8-DQ15.
DQ0 - DQ15	Input / Output	**Data I/O:** The DQ0-DQ15 input and output data are synchronized with positive and negative edges of LDQS and UDQS. The I/Os are byte-maskable during Writes.
V_{DD}	Supply	**Power Supply:** 2.5V ± 0.2V.

chanhvinh.com

V_{SS}	Supply	**Ground**
V_{DDQ}	Supply	**DQ Power:** 2.5V ± 0.2V. Provide isolated power to DQs for improved noise immunity.
V_{SSQ}	Supply	**DQ Ground:** Provide isolated ground to DQs for improved noise immunity.
V_{REF}	Supply	**Reference Voltage for Inputs:** +0.5*V_{DDQ}
NC	-	**No Connect:** These pins should be left unconnected.

chanhvinh.com

Operation Mode

Table 3 shows the truth table for the operation commands.

Table 3. Truth Table (Note (1), (2))

Command	State	CKE_{n-1}	CKE_n	DM	BA0,1	A10	A0-9, 11-12	$\overline{CS}$	$\overline{RAS}$	$\overline{CAS}$	$\overline{WE}$
BankActivate	Idle(3)	H	X	X	V	Row address		L	L	H	H
BankPrecharge	Any	H	X	X	V	L	X	L	L	H	L
Precharge All	Any	H	X	X	X	H	X	L	L	H	L
Write	Active(3)	H	X	X	V	L	Column address (A0 ~ A9)	L	H	L	L
Write and AutoPrecharge	Active(3)	H	X	X	V	H		L	H	L	L
Read	Active(3)	H	X	X	V	L	Column address (A0 ~ A9)	L	H	L	H
Read and Autoprecharge	Active(3)	H	X	X	V	H		L	H	L	H
Mode Register Set	Idle	H	X	X	OP code			L	L	L	L
Extended MRS	Idle	H	X	X	OP code			L	L	L	L
No-Operation	Any	H	X	X	X	X	X	L	H	H	H
Burst Stop	Active(4)	H	X	X	X	X	X	L	H	H	L
Device Deselect	Any	H	X	X	X	X	X	H	X	X	X
AutoRefresh	Idle	H	H	X	X	X	X	L	L	L	H
SelfRefresh Entry	Idle	H	L	X	X	X	X	L	L	L	H
SelfRefresh Exit	Idle (SelfRefresh)	L	H	X	X	X	X	H	X	X	X
								L	H	H	H
Precharge Power Down Mode Entry	Idle	H	L	X	X	X	X	H	X	X	X
								L	H	H	H
Precharge Power Down Mode Exit	Any (PowerDown)	L	H	X	X	X	X	H	X	X	X
								L	H	H	H
Active Power Down Mode Entry	Active	H	L	X	X	X	X	H	X	X	X
								L	V	V	V
Active Power Down Mode Exit	Any (PowerDown)	L	H	X	X	X	X	H	X	X	X
								L	H	H	H
Data Input Mask Disable	Active	H	X	L	X	X	X	X	X	X	X
Data Input Mask Enable(5)	Active	H	X	H	X	X	X	X	X	X	X

Note: 1. V=Valid data, X=Don't Care, L=Low level, H=High level
2. CKE_n signal is input level when commands are provided.
CKE_{n-1} signal is input level one clock cycle before the commands are provided.
3. These are states of bank designated by BA signal.
4. Device state is 2, 4, and 8 burst operation.
5. LDM and UDM can be enabled respectively.

chanhvinh.com

Mode Register Set (MRS)

The Mode Register stores the data for controlling various operating modes of a DDR SDRAM. It programs CAS Latency, Burst Type, and Burst Length to make the DDR SDRAM useful for a variety of applications. The default value of the Mode Register is not defined; therefore the Mode Register must be written by the user. Values stored in the register will be retained until the register is reprogrammed. The Mode Register is written by asserting Low on $\overline{CS}$, $\overline{RAS}$, $\overline{CAS}$, $\overline{WE}$, BA1 and BA0 (the device should have all banks idle with no bursts in progress prior to writing into the mode register, and CKE should be High). The state of address pins A0~A12 and BA0, BA1 in the same cycle in which $\overline{CS}$, $\overline{RAS}$, $\overline{CAS}$ and $\overline{WE}$ are asserted Low is written into the Mode Register. A minimum of two clock cycles, tMRD, are required to complete the write operation in the Mode Register. The Mode Register is divided into various fields depending on functionality. The Burst Length uses A0~A2, Burst Type uses A3, and CAS Latency (read latency from column address) uses A4~A6. A logic 0 should be programmed to all the undefined addresses to ensure future compatibility. Reserved states should not be used to avoid unknown device operation or incompatibility with future versions. Refer to the table for specific codes for various burst lengths, burst types and CAS latencies.

Table 4. Mode Register Bitmap

BA1	BA0	A12	A11	A10	A9	A8	A7	A6	A5	A4	A3	A2	A1	A0	
															Address Field
0	0	RFU must be set to "0"				T.M.		CAS Latency			BT	Burst Length			Mode Register

A8	A7	Test Mode
0	0	Normal mode
1	0	DLL Reset
X	1	Test mode

A6	A5	A4	CAS Latency
0	0	0	Reserved
0	0	1	Reserved
0	1	0	2
0	1	1	3
1	0	0	Reserved
1	0	1	Reserved
1	1	0	2.5
1	1	1	Reserved

A3	Burst Type
0	Sequential
1	Interleave

A2	A1	A0	Burst Length
0	0	0	Reserved
0	0	1	2
0	1	0	4
0	1	1	8
1	0	0	Reserved
1	0	1	Reserved
1	1	0	Reserved
1	1	1	Reserved

BA0	Mode
0	MRS
1	EMRS

- Burst Length Field (A2~A0)

  This field specifies the data length of column access using the A2~A0 pins and selects the Burst Length to be 2, 4, 8.

Table 5. Burst Length

A2	A1	A0	Burst Length
0	0	0	Reserved
0	0	1	2
0	1	0	4
0	1	1	8
1	0	0	Reserved
1	0	1	Reserved
1	1	0	Reserved
1	1	1	Reserved

chanhvinh.com

- Addressing Mode Select Field (A3)

The Addressing Mode can be one of two modes, either Interleave Mode or Sequential Mode. Both Sequential Mode and Interleave Mode support burst length of 2, 4 and 8.

Table 6. Addressing Mode

A3	Addressing Mode
0	Sequential
1	Interleave

- Burst Definition, Addressing Sequence of Sequential and Interleave Mode

Table 7. Burst Address ordering

Burst Length	Start Address			Sequential	Interleave
	A2	A1	A0		
2	X	X	0	0, 1	0, 1
	X	X	1	1, 0	1, 0
4	X	0	0	0, 1, 2, 3	0, 1, 2, 3
	X	0	1	1, 2, 3, 0	1, 0, 3, 2
	X	1	0	2, 3, 0, 1	2, 3, 0, 1
	X	1	1	3, 0, 1, 2	3, 2, 1, 0
8	0	0	0	0, 1, 2, 3, 4, 5, 6, 7	0, 1, 2, 3, 4, 5, 6, 7
	0	0	1	1, 2, 3, 4, 5, 6, 7, 0	1, 0, 3, 2, 5, 4, 7, 6
	0	1	0	2, 3, 4, 5, 6, 7, 0, 1	2, 3, 0, 1, 6, 7, 4, 5
	0	1	1	3, 4, 5, 6, 7, 0, 1, 2	3, 2, 1, 0, 7, 6, 5, 4
	1	0	0	4, 5, 6, 7, 0, 1, 2, 3	4, 5, 6, 7, 0, 1, 2, 3
	1	0	1	5, 6, 7, 0, 1, 2, 3, 4	5, 4, 7, 6, 1, 0, 3, 2
	1	1	0	6, 7, 0, 1, 2, 3, 4, 5	6, 7, 4, 5, 2, 3, 0, 1
	1	1	1	7, 0, 1, 2, 3, 4, 5, 6	7, 6, 5, 4, 3, 2, 1, 0

- CAS Latency Field (A6~A4)

This field specifies the number of clock cycles from the assertion of the Read command to the first read data. The minimum whole value of CAS Latency depends on the frequency of CK. The minimum whole value satisfying the following formula must be programmed into this field. $t_{CAC}(min) \leq$ CAS Latency X t_{CK}

Table 8. CAS Latency

A6	A5	A4	CAS Latency
0	0	0	Reserved
0	0	1	Reserved
0	1	0	2 clocks
0	1	1	3 clocks
1	0	0	Reserved
1	0	1	Reserved
1	1	0	2.5 clocks
1	1	1	Reserved

- Test Mode field (A8~A7)

These two bits are used to enter the test mode and must be programmed to "00" in normal operation.

Table 9. Test Mode

A8	A7	Test Mode
0	0	Normal mode
1	0	DLL Reset

chanhvinh.com

- (BA0, BA1)

Table 10. MRS/EMRS

BA1	BA0	A12 ~ A0
RFU	0	MRS Cycle
RFU	1	Extended Functions (EMRS)

Extended Mode Register Set (EMRS)

The Extended Mode Register Set stores the data for enabling or disabling DLL and selecting output driver strength. The default value of the extended mode register is not defined, therefore must be written after power up for proper operation. The Extended Mode Register is written by asserting Low on $\overline{CS}$, $\overline{RAS}$, $\overline{CAS}$, $\overline{WE}$, BA1 and BA0 (the device should have all banks idle with no bursts in progress prior to writing into the mode register, and CKE should be High). The state of A0 ~ A12, BA0 and BA1 is written in the mode register in the same cycle as $\overline{CS}$, $\overline{RAS}$, $\overline{CAS}$, and $\overline{WE}$ going low. The DDR SDRAM should be in all bank precharge with CKE already high prior to writing into the extended mode register. A1 is used for setting driver strength to normal, or weak. Two clock cycles are required to complete the write operation in the extended mode register. The mode register contents can be changed using the same command and clock cycle requirements during operation as long as all banks are in the idle state. A0 is used for DLL enable or disable. "High" on BA0 is used for EMRS. Refer to the table for specific codes.

Table 11. Extended Mode Register Bitmap

BA1	BA0	A12	A11	A10	A9	A8	A7	A6	A5	A4	A3	A2	A1	A0	Address Field
0	1	RFU must be set to “0”						DS1	RFU must be set to “0”				DS0	DLL	Extended Mode Register

BA0	Mode
0	MRS
1	EMRS

A6	A1	Drive Strength	Comment
0	0	Full	
0	1	Weak	
1	0	RFU	Reserved For Future
1	1	Matched impedance	Output driver matches impedance

A0	DLL
0	Enable
1	Disable

chanhvinh.com

Table 12. Absolute Maximum Rating

Symbol	Item		Values	Unit
V_{IN}, V_{OUT}	Input, Output Voltage		- 0.5~ V_{DDQ} + 0.5	V
V_{DD}, V_{DDQ}	Power Supply Voltage		- 1~3.6	V
T_A	Ambient Temperature	Commercial	0~70	°C
		Industrial	-40~85	°C
T_{STG}	Storage Temperature		- 55~150	°C
T_{SOLDER}	Soldering Temperature		260	°C
P_D	Power Dissipation		1	W
I_{OS}	Short Circuit Output Current		50	mA

Note1: Stress greater than those listed under "Absolute Maximum Ratings" may cause permanent damage to the device.

Note2: These voltages are relative to Vss

Table 13. Recommended D.C. Operating Conditions (T_A = -40 ~ 85 °C)

Symbol	Parameter	Min.	Max.	Unit	Note
V_{DD}	Power Supply Voltage	2.3	2.7	V	
V_{DDQ}	Power Supply Voltage (for I/O Buffer)	2.3	2.7	V	
V_{REF}	Input Reference Voltage	0.49*V_{DDQ}	0.51* V_{DDQ}	V	
V_{IH} (DC)	Input High Voltage (DC)	V_{REF} + 0.15	V_{DDQ} + 0.3	V	
V_{IL} (DC)	Input Low Voltage (DC)	-0.3	V_{REF} – 0.15	V	
V_{TT}	Termination Voltage	V_{REF} - 0.04	V_{REF} + 0.04	V	
V_{IN} (DC)	Input Voltage Level, CK and $\overline{CK}$ inputs	-0.3	V_{DDQ} + 0.3	V	
V_{ID} (DC)	Input Different Voltage, CK and $\overline{CK}$ inputs	0.36	V_{DDQ} + 0.6	V	
I_I	Input leakage current	-2	2	µA	
I_{OZ}	Output leakage current	-5	5	µA	
I_{OH}	Output High Current	-16.2	-	mA	V_{OH} = 1.95V
I_{OL}	Output Low Current	16.2	-	mA	V_{OL} = 0.35V

Note : All voltages are referenced to V_{SS}.

Table 14. Capacitance (V_{DD} = 2.5V, f = 1MHz, T_A = 25 °C)

Symbol	Parameter	Min.	Max.	Unit
C_{IN1}	Input Capacitance (CK, $\overline{CK}$)	2	3	pF
C_{IN2}	Input Capacitance (All other input-only pins)	2	3	pF
$C_{I/O}$	DQ, DQS, DM Input/Output Capacitance	4	5	pF

Note: These parameters are guaranteed by design, periodically sampled and are not 100% tested

chanhvinh.com

Table 15. D.C. Characteristics (V_{DD} = 2.5V ± 0.2V, T_A = -40~85 °C)

Parameter & Test Condition	Symbol	-5 Max.	Unit	Note
OPERATING CURRENT: One bank; Active-Precharge; t_{RC}=t_{RC}(min); t_{CK}=t_{CK}(min); DQ,DM and DQS inputs changing once per clock cycle; Address and control inputs changing once every two clock cycles.	IDD0	80	mA	
OPERATING CURRENT: One bank; BL=4; reads - Refer to the following page for detailed test conditions	IDD1	90	mA	
PRECHARGE POWER-DOWN STANDBY CURRENT: All banks idle; power-down mode; t_{CK}=t_{CK}(min); CKE = LOW	IDD2P	5	mA	
PRECHARGE FLOATING STANDBY CURRENT: CS = HIGH; all banks idle; CKE = HIGH; t_{CK} =t_{CK}(min); address and other control inputs changing once per clock cycle; V_{IN} = V_{REF} for DQ, DQS and DM	IDD2F	35	mA	
PRECHARGE QUIET STANDBY CURRENT: CS =HIGH; all banks idle; CKE =HIGH; t_{CK}=t_{CK}(min) address and other control inputs stable at ≥ V_{IH}(min) or ≤ V_{IL} (max); V_{IN} = V_{REF} for DQ, DQS and DM	IDD2Q	35	mA	
ACTIVE POWER-DOWN STANDBY CURRENT : one bank active; power-down mode; CKE=LOW; t_{CK}=t_{CK}(min)	IDD3P	20	mA	
ACTIVE STANDBY CURRENT : $\overline{CS}$ =HIGH;CKE=HIGH; one bank active ; t_{RC}=t_{RC}(max);t_{CK}=t_{CK}(min);Address and control inputs changing once per clock cycle; DQ,DQS and DM inputs changing twice per clock cycle	IDD3N	65	mA	
OPERATING CURRENT BURST READ : BL=2; READS; Continuous burst; one bank active; Address and control inputs changing once per clock cycle; t_{CK}=t_{CK}(min); Iout=0mA;50% of data changing on every transfer	IDD4R	130	mA	
OPERATING CURRENT BURST Write : BL=2; WRITES; Continuous Burst ;one bank active; address and control inputs changing once per clock cycle; t_{CK}=t_{CK}(min); DQ,DQS and DM changing twice per clock cycle; 50% of data changing on every transfer	IDD4W	130	mA	
AUTO REFRESH CURRENT : t_{RC}=t_{RFC}(min); t_{CK}=t_{CK}(min)	IDD5	140	mA	
SELF REFRESH CURRENT: Self Refresh Mode ; CKE≦ 0.2V;t_{CK}=t_{CK}(min)	IDD6	6	mA	1
BURST OPERATING CURRENT 4 bank operation: Four bank interleaving READs; BL=4;with Auto Precharge; t_{RC}=t_{RC}(min); t_{CK}=t_{CK}(min); Address and control inputs change only during Active, READ , or WRITE command	IDD7	210	mA	

chanhvinh.com

Table 16. Electrical Characteristics and Recommended A.C. Operating Condition

(V_{DD} = 2.5V ± 0.2V, T_A = -40~85 °C)

Symbol	Parameter		-5		Unit	Note
			Min.	Max.		
t_{CK}	Clock cycle time	CL = 2	7.5	12	ns	
		CL = 2.5	6	12	ns	
		CL = 3	5	12	ns	
t_{CH}	Clock high level width		0.45	0.55	t_{CK}	
t_{CL}	Clock low level width		0.45	0.55	t_{CK}	
t_{HP}	Clock half period		t_{CLMIN} or t_{CHMIN}	-	ns	2
t_{HZ}	Data-out-high impedance time from CK, $\overline{CK}$		-	0.7	ns	3
t_{LZ}	Data-out-low impedance time from CK, $\overline{CK}$		-0.7	0.7	ns	3
t_{DQSCK}	DQS-out access time from CK, $\overline{CK}$		-0.6	0.6	ns	
t_{AC}	Output access time from CK, $\overline{CK}$		-0.7	0.7	ns	
t_{DQSQ}	DQS-DQ Skew		-	0.4	ns	
t_{RPRE}	Read preamble		0.9	1.1	t_{CK}	
t_{RPST}	Read postamble		0.4	0.6	t_{CK}	
t_{DQSS}	CK to valid DQS-in		0.72	1.25	t_{CK}	
t_{WPRES}	DQS-in setup time		0	-	ns	4
t_{WPRE}	DQS Write preamble		0.25	-	t_{CK}	
t_{WPST}	DQS write postamble		0.4	0.6	t_{CK}	5
t_{DQSH}	DQS in high level pulse width		0.35	-	t_{CK}	
t_{DQSL}	DQS in low level pulse width		0.35	-	t_{CK}	
t_{IS}	Address and Control input setup time		0.7	-	ns	6
t_{IH}	Address and Control input hold time		0.7	-	ns	6
t_{DS}	DQ & DM setup time to DQS		0.4	-	ns	
t_{DH}	DQ & DM hold time to DQS		0.4	-	ns	
t_{QH}	DQ/DQS output hold time from DQS		t_{HP} - t_{QHS}	-	ns	
t_{RC}	Row cycle time		55	-	ns	
t_{RFC}	Refresh row cycle time		70	-	ns	
t_{RAS}	Row active time		40	70K	ns	
t_{RCD}	Active to Read or Write delay		15	-	ns	
t_{RP}	Row precharge time		15	-	ns	
t_{RRD}	Row active to Row active delay		10	-	ns	
t_{WR}	Write recovery time		15	-	ns	
t_{WTR}	Internal Write to Read Command Delay		2	-	t_{CK}	
t_{MRD}	Mode register set cycle time		10	-	ns	
t_{REFI}	Average Periodic Refresh interval		-	7.8	µs	7
t_{XSRD}	Self refresh exit to read command delay		200	-	t_{CK}	
t_{XSNR}	Self refresh exit to non-read command delay		75	-	ns	
t_{DAL}	Auto Precharge write recovery + precharge time		t_{WR}+t_{RP}	-	ns	
t_{DIPW}	DQ and DM input pulse width		1.75	-	ns	
t_{IPW}	Control and Address input pulse width		2.2	-	ns	
t_{QHS}	Data Hold Skew Factor		-	0.5	ns	
t_{DSS}	DQS falling edge to CK setup time		0.2	-	t_{CK}	
t_{DSH}	DQS falling edge hold time from CK		0.2	-	t_{CK}	
t_{RAP}	Active to Autoprecharge Delay		t_{RCD} or t_{RASmin}	-	ns	

chanhvinh.com

Table 17. Recommended A.C. Operating Conditions (V_{DD} = 2.5V ± 0.2V, T_A = -40~85 °C)

Symbol	Parameter	Min.	Max.	Unit
V_{IH} (AC)	Input High Voltage (AC)	V_{REF} + 0.31	-	V
V_{IL} (AC)	Input Low Voltage (AC)	-	V_{REF} – 0.31	V
V_{ID} (AC)	Input Different Voltage, CK and $\overline{CK}$ inputs	0.7	V_{DDQ} + 0.6	V
V_{IX} (AC)	Input Crossing Point Voltage, CK and $\overline{CK}$ inputs	0.5*V_{DDQ}-0.2	0.5*V_{DDQ}+0.2	V

Note:

1) Enables on-chip refresh and address counters.
2) Min(t_{CL}, t_{CH}) refers to the smaller of the actual clock low time and actual clock high time as provided to the device.
3) t_{HZ} and t_{LZ} transitions occur in the same access time windows as valid data transitions. These parameters are not referenced to a specific voltage level, but specify when the device output is no longer driving(HZ), or begins driving(LZ).
4) The specific requirement is that DQS be valid (High, Low, or at some point on a valid transition) on or before this CLK edge. A valid transition is defined as monotonic, and meeting the input slew rate specifications of the device. When no writes were previously in progress on the bus, DQS will be transitioning from High-Z to logic LOW. If a previous write was in progress, DQS could be HIGH, LOW, or transitioning from HIGH to LOW at this time, depending on t_{DQSS}.
5) The maximum limit for this parameter is not a device limit. The device will operate with a greater value for this parameter, but system performance (bus turnaround) will degrade accordingly.
6) For command/address and CK & $\overline{CK}$ slew rate ≧ 1.0V/ns.
7) A maximum of eight AUTO REFRESH commands can be posted to any given DDR SDRAM device.
8) Power-up sequence is described in Note 10
9) A.C. Test Conditions

Table 18. SSTL _2 Interface

Reference Level of Output Signals (V_{REF})	0.5 * V_{DDQ}
Output Load	Reference to the Test Load
Input Signal Levels	V_{REF}+0.31 V / V_{REF}-0.31 V
Input Signals Slew Rate	1 V/ns
Reference Level of Input Signals	0.5 * V_{DDQ}

chanhvinh.com

Figure 3. SSTL_2 A.C. Test Load

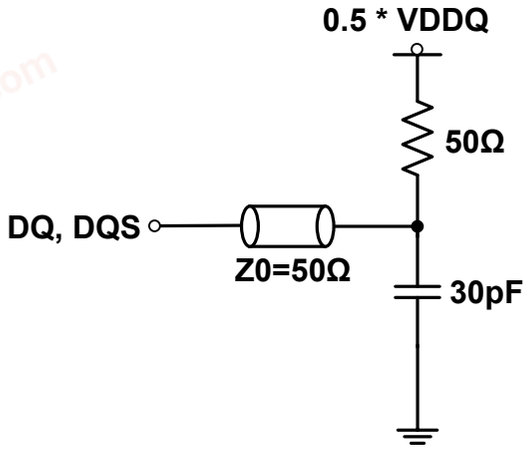

10) **Power up Sequence**

Power up must be performed in the following sequence.

1) Apply power to V_{DD} before or at the same time as V_{DDQ}, V_{TT} and V_{REF} when all input signals are held "NOP" state and maintain CKE “LOW”.
2) Start clock and maintain stable condition for minimum 200μs.
3) Issue a “NOP” command and keep CKE “HIGH”
4) Issue a “Precharge All” command.
5) Issue EMRS – enable DLL.
6) Issue MRS – reset DLL. (An additional 200 clock cycles are required to lock the DLL).
7) Precharge all banks of the device.
8) Issue two or more Auto Refresh commands.
9) Issue MRS – with A8 to low to initialize the mode register.

chanhvinh.com

Timing Waveforms

Figure 4. Activating a Specific Row in a Specific Bank

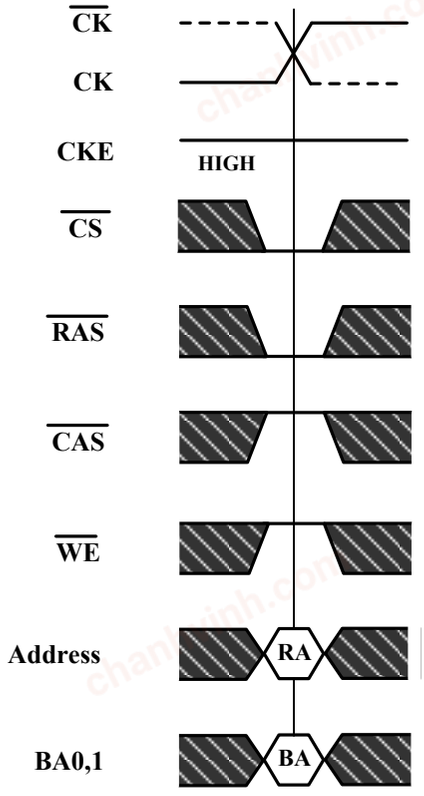

RA=Row Address

BA=Bank Address

Don't Care

chanhvinh.com

Figure 5. tRCD and tRRD Definition

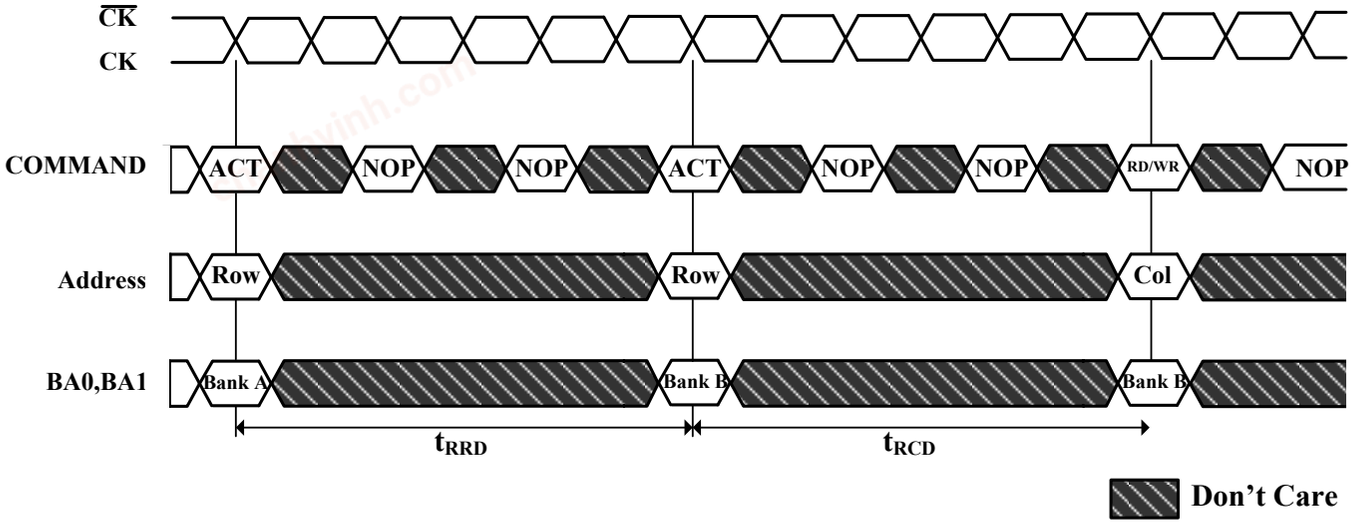

Figure 6. READ Command

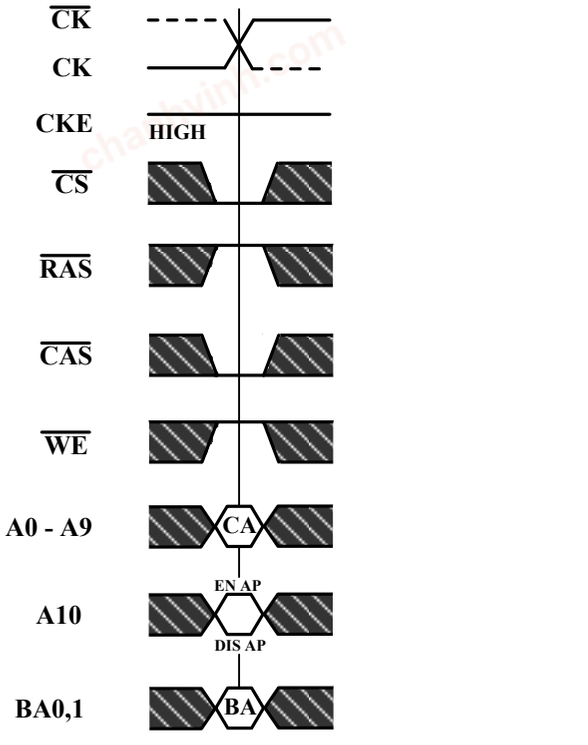

CA=Column Address
BA=Bank Address
EN AP=Enable Autoprecharge
DIS AP=Disable Autoprecharge

Don't Care

chanhvinh.com

Figure 7. Read Burst Required CAS Latencies (CL=2)

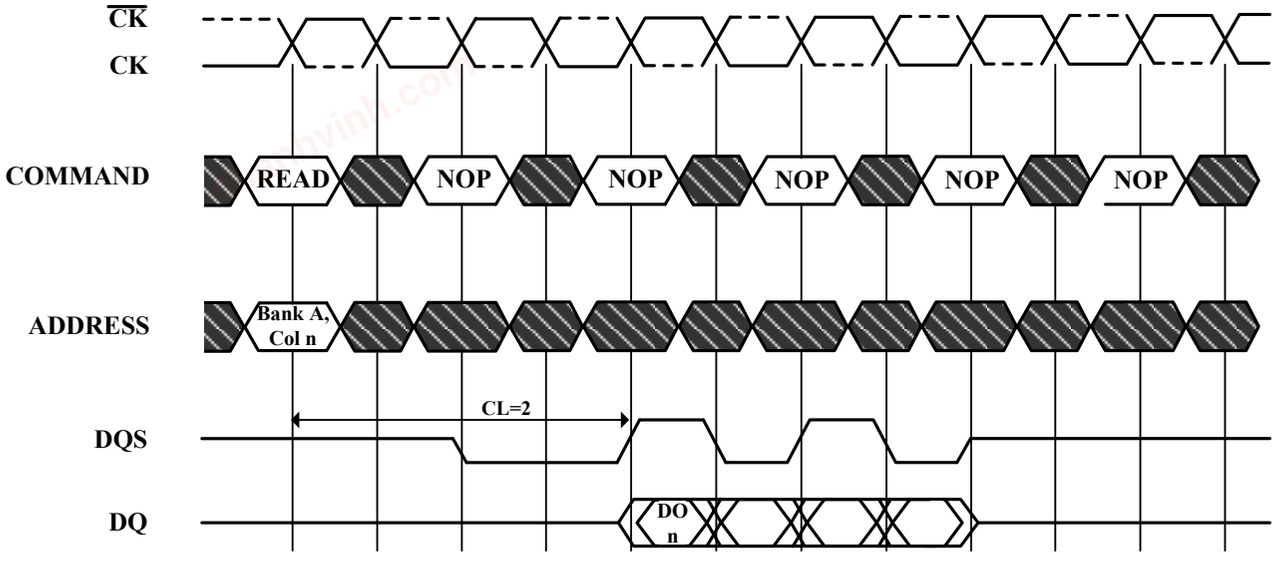

DO n=Data Out from column n

Burst Length=4

3 subsequent elements of Data Out appear in the programmed order following DO n

Don't Care

Read Burst Required CAS Latencies (CL=2.5)

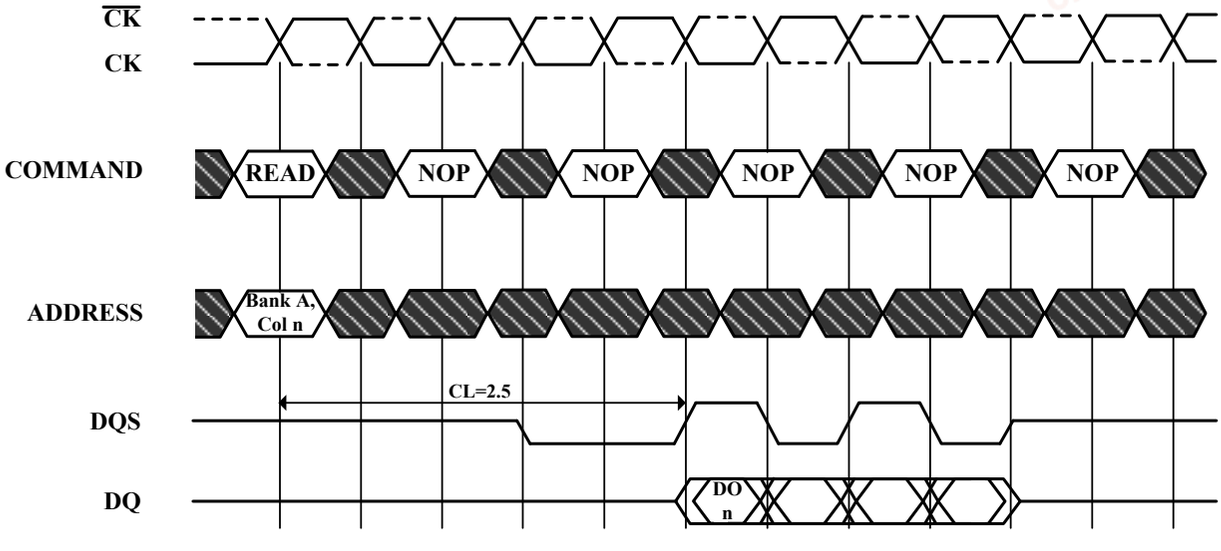

DO n=Data Out from column n

Burst Length=4

3 subsequent elements of Data Out appear in the programmed order following DO n

Don't Care

chanhvinh.com

Read Burst Required CAS Latencies (CL=3)

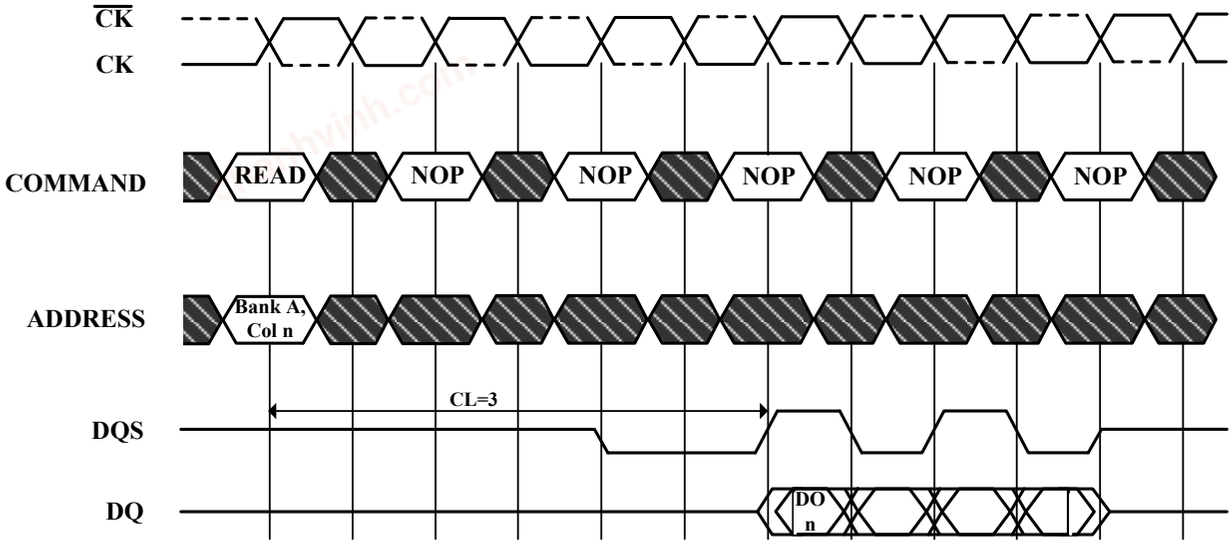

DO n=Data Out from column n
Burst Length=4
3 subsequent elements of Data Out appear in the programmed order following DO n

Don't Care

chanhvinh.com

Figure 8. Consecutive Read Bursts Required CAS Latencies (CL=2)

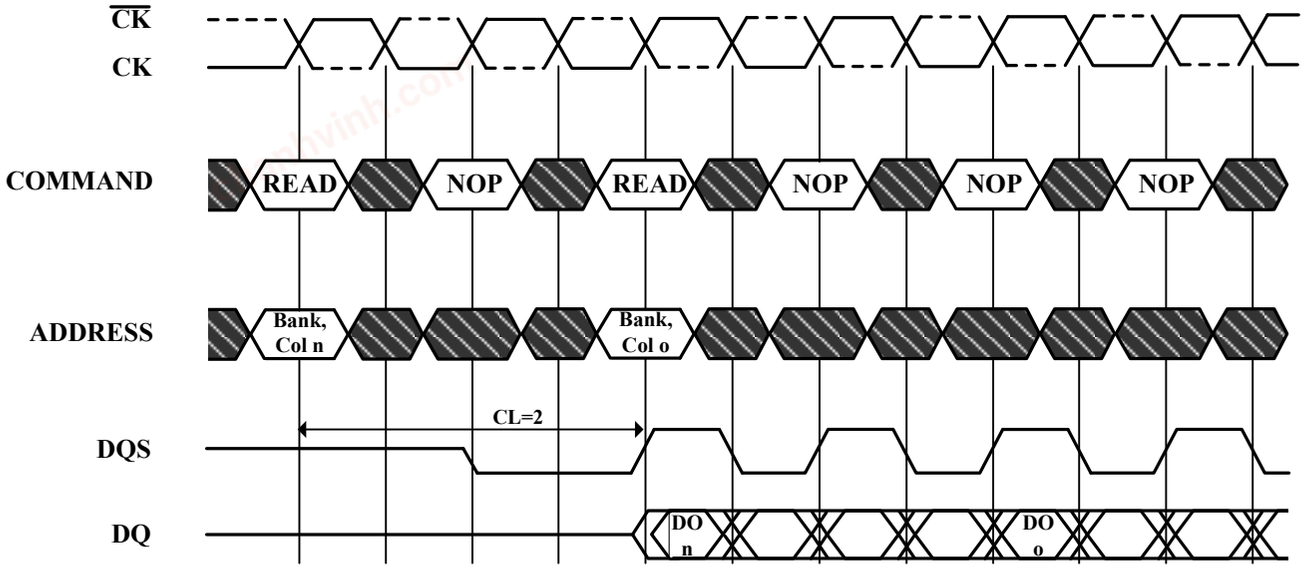

DO n (or o)=Data Out from column n (or column o)
Burst Length=4 or 8 (if 4, the bursts are concatenated; if 8, the second burst interrupts the first)
3 subsequent elements of Data Out appear in the programmed order following DO n
3 (or 7) subsequent elements of Data Out appear in the programmed order following DO o
Read commands shown must be to the same device

Don't Care

chanhvinh.com

Consecutive Read Bursts Required CAS Latencies (CL=2.5)

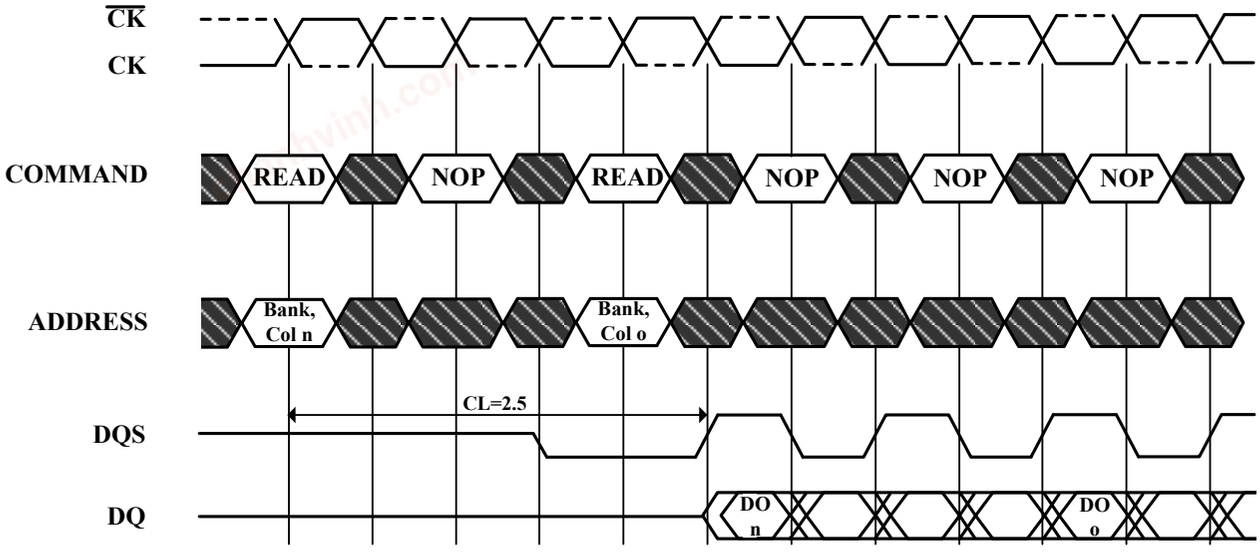

DO n (or o)=Data Out from column n (or column o)
Burst Length=4 or 8 (if 4, the bursts are concatenated; if 8, the second burst interrupts the first)
3 subsequent elements of Data Out appear in the programmed order following DO n
3 (or 7) subsequent elements of Data Out appear in the programmed order following DO o
Read commands shown must be to the same device

Don't Care

chanhvinh.com

Consecutive Read Bursts Required CAS Latencies (CL=3)

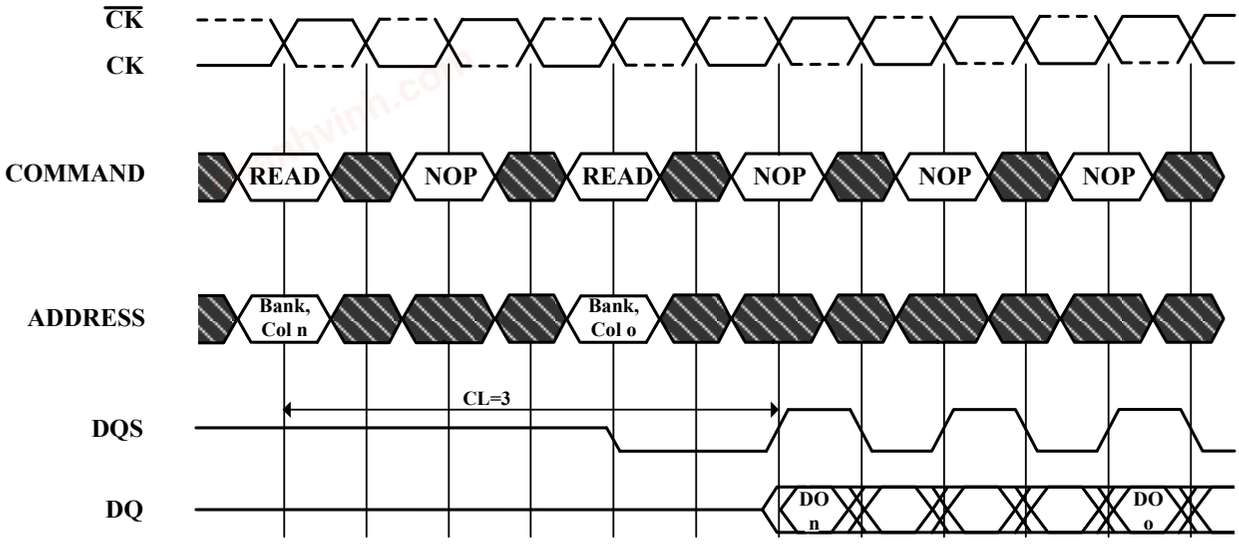

DO n (or o)=Data Out from column n (or column o)
Burst Length=4 or 8 (if 4, the bursts are concatenated; if 8, the second burst interrupts the first)
3 subsequent elements of Data Out appear in the programmed order following DO n
3 (or 7) subsequent elements of Data Out appear in the programmed order following DO o
Read commands shown must be to the same device

Don't Care

chanhvinh.com

Figure 9. Non-Consecutive Read Bursts Required CAS Latencies (CL=2)

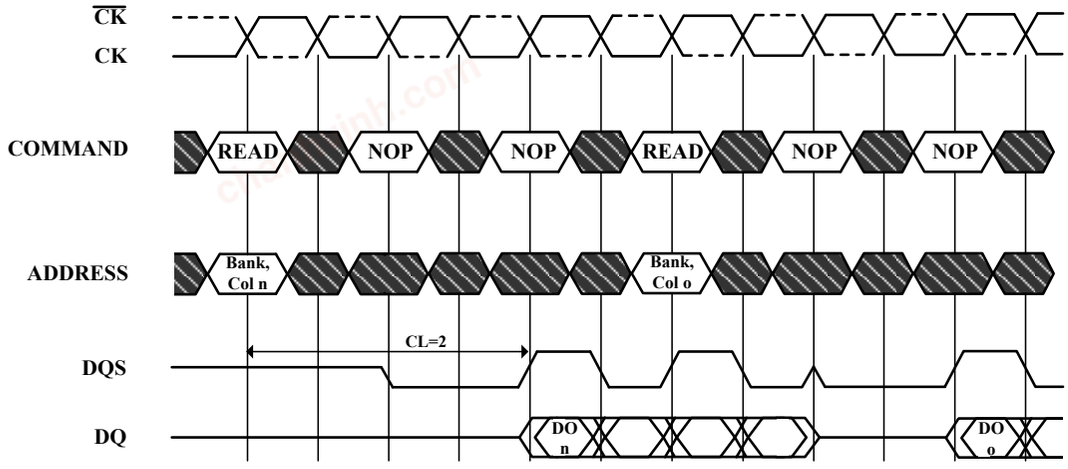

DO n (or o)=Data Out from column n (or column o)

Burst Length=4

3 subsequent elements of Data Out appear in the programmed order following DO n (and following DO o)

Don't Care

Non-Consecutive Read Bursts Required CAS Latencies (CL=2.5)

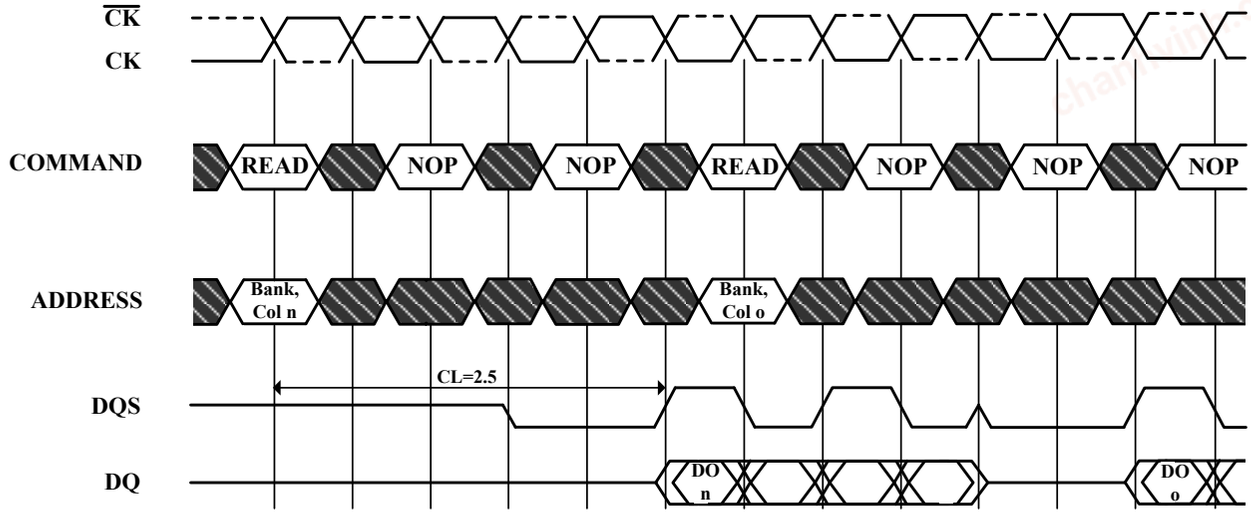

DO n (or o)=Data Out from column n (or column o)

Burst Length=4

3 subsequent elements of Data Out appear in the programmed order following DO n (and following DO o)

Don't Care

chanhvinh.com

Non-Consecutive Read Bursts Required CAS Latencies (CL=3)

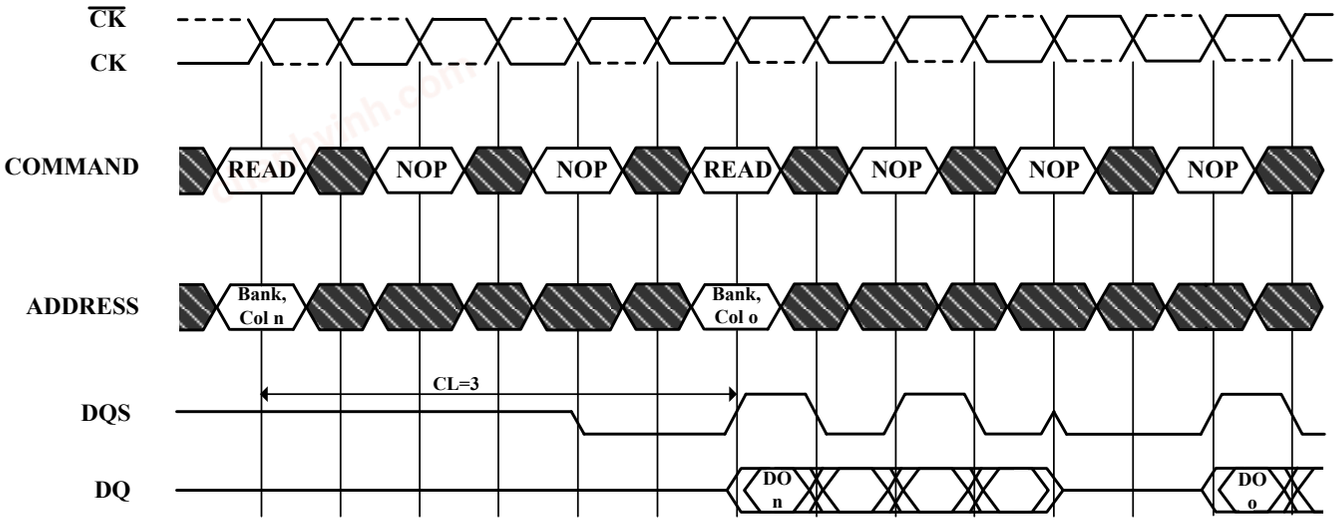

DO n (or o)=Data Out from column n (or column o)

Burst Length=4

3 subsequent elements of Data Out appear in the programmed order following DO n (and following DO o)

Don't Care

chanhvinh.com

Figure 10. Random Read Accesses Required CAS Latencies (CL=2)

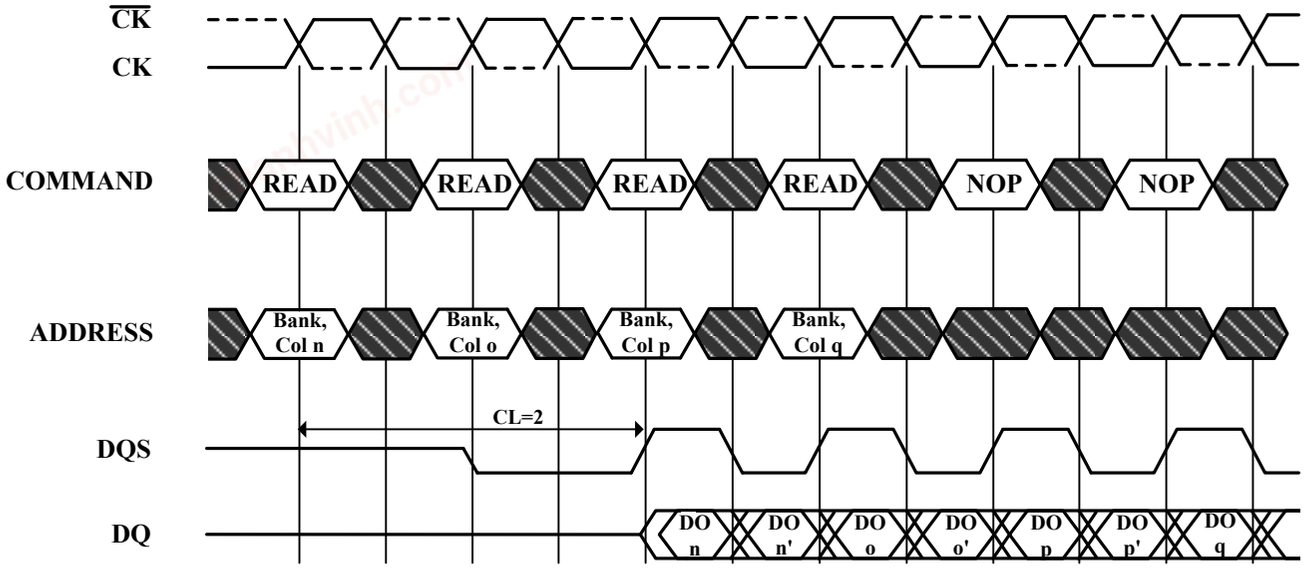

DO n, etc. =Data Out from column n, etc.
n', etc. =the next Data Out following DO n, etc. according to the programmed burst order
Burst Length=2,4 or 8 in cases shown. If burst of 4 or 8, the burst is interrupted
Reads are to active rows in any banks

Don't Care

Random Read Accesses Required CAS Latencies (CL=2.5)

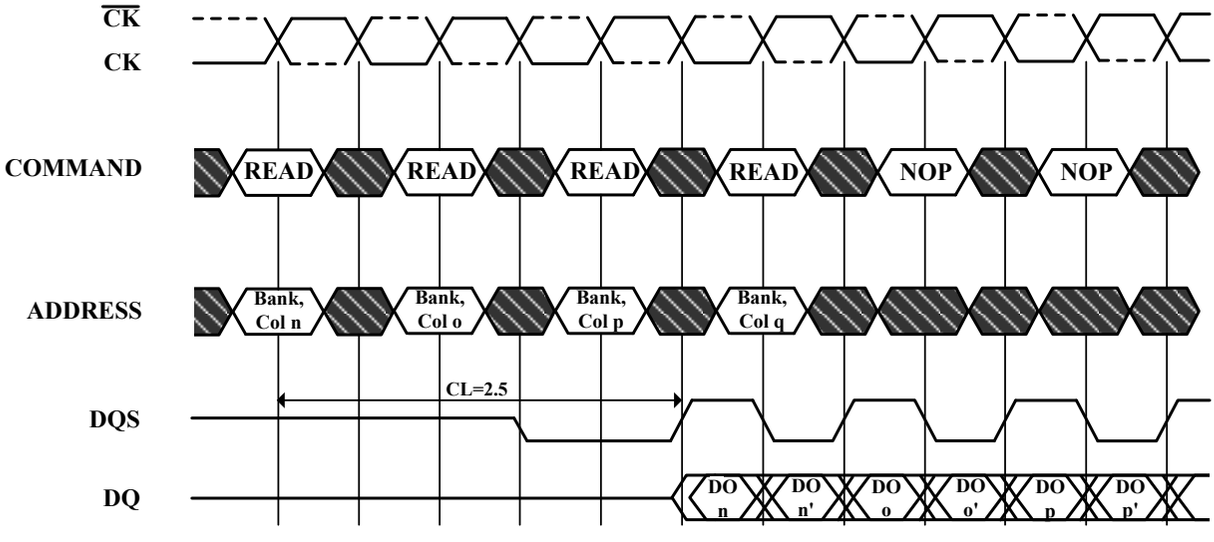

DO n, etc. =Data Out from column n, etc.
n', etc. =the next Data Out following DO n, etc. according to the programmed burst order
Burst Length=2,4 or 8 in cases shown. If burst of 4 or 8, the burst is interrupted
Reads are to active rows in any banks

Don't Care

chanhvinh.com

Random Read Accesses Required CAS Latencies (CL=3)

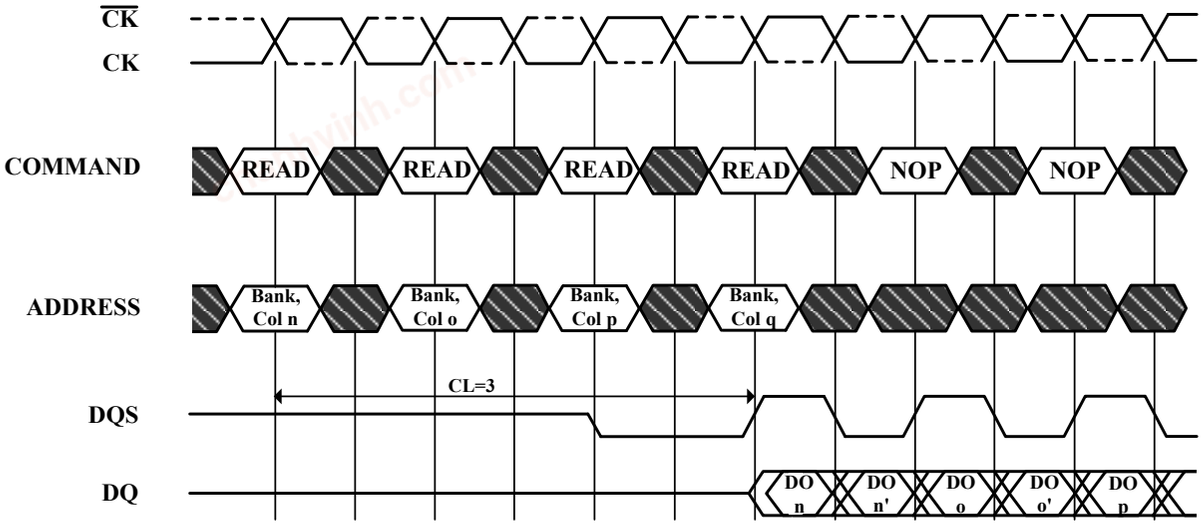

DO n, etc. =Data Out from column n, etc.
n', etc. =the next Data Out following DO n, etc. according to the programmed burst order
Burst Length=2,4 or 8 in cases shown. If burst of 4 or 8, the burst is interrupted
Reads are to active rows in any banks

Don't Care

chanhvinh.com

Figure 11. Terminating a Read Burst Required CAS Latencies (CL=2)

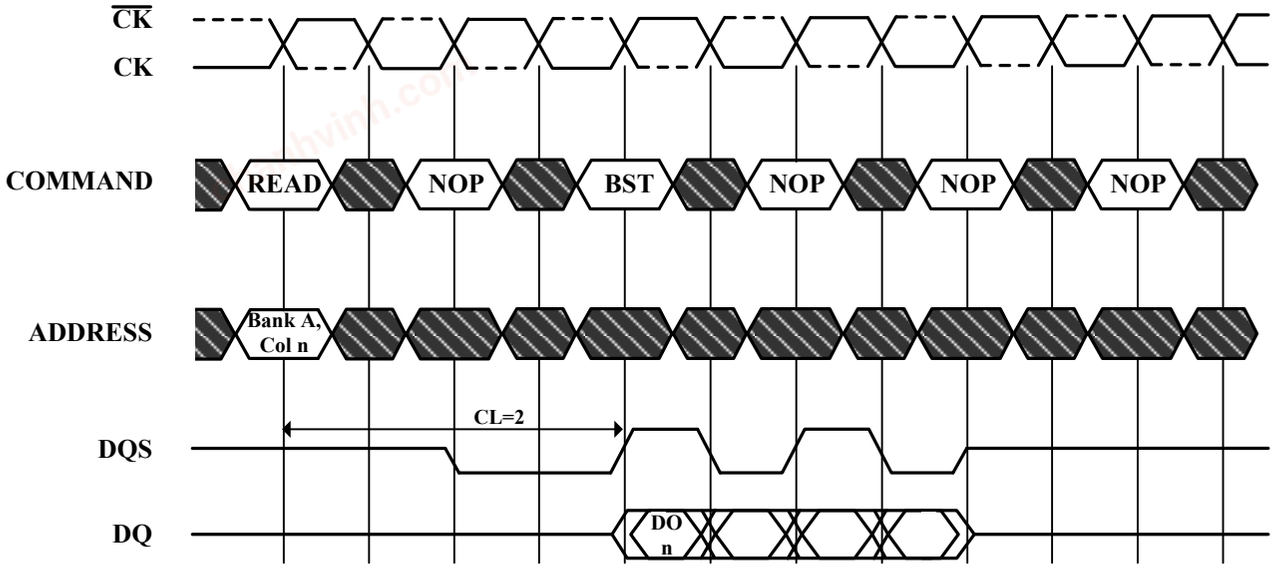

DO n = Data Out from column n

Cases shown are bursts of 8 terminated after 4 data elements

3 subsequent elements of Data Out appear in the programmed order following DO n

Don't Care

Terminating a Read Burst Required CAS Latencies (CL=2.5)

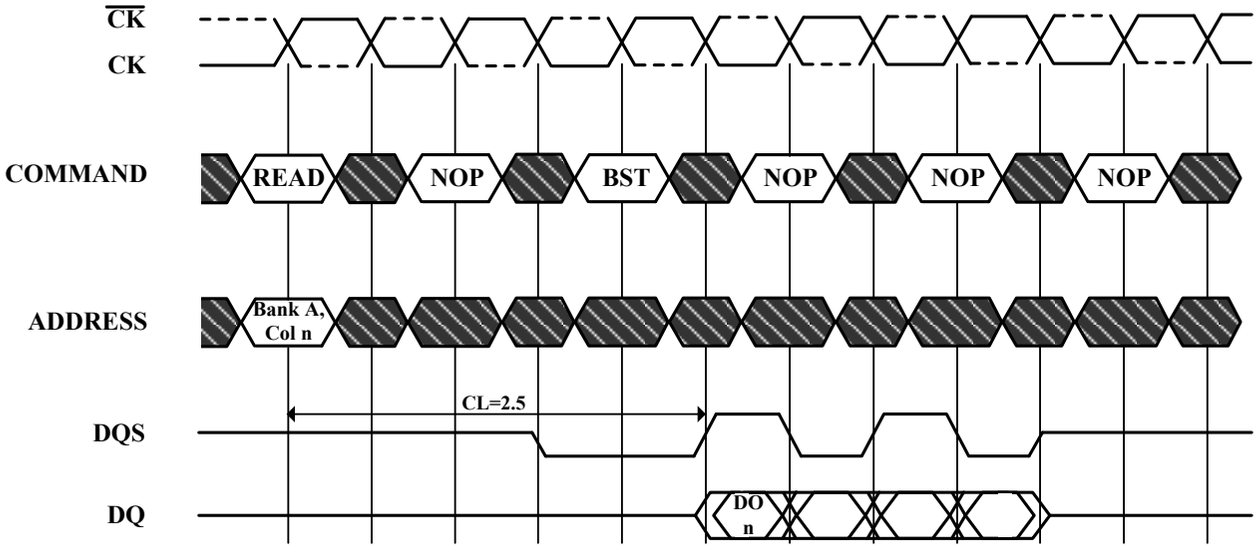

DO n = Data Out from column n

Cases shown are bursts of 8 terminated after 4 data elements

3 subsequent elements of Data Out appear in the programmed order following DO n

Don't Care

chanhvinh.com

Terminating a Read Burst Required CAS Latencies (CL=3)

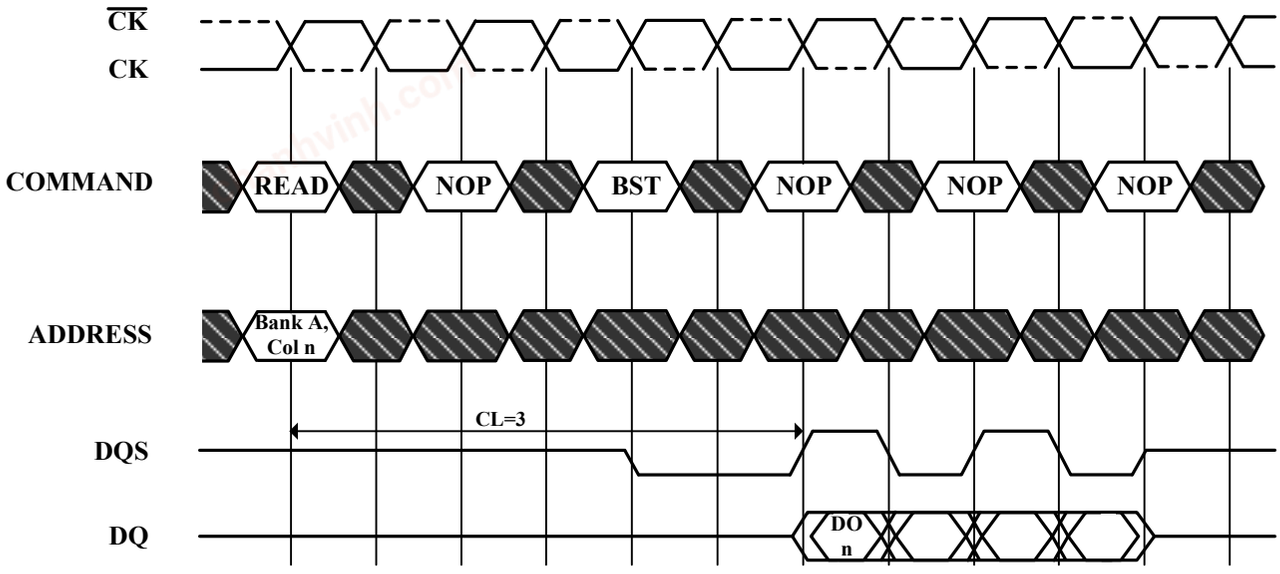

DO n = Data Out from column n

Cases shown are bursts of 8 terminated after 4 data elements

3 subsequent elements of Data Out appear in the programmed order following DO n

Don't Care

chanhvinh.com

Figure 12. Read to Write Required CAS Latencies (CL=2)

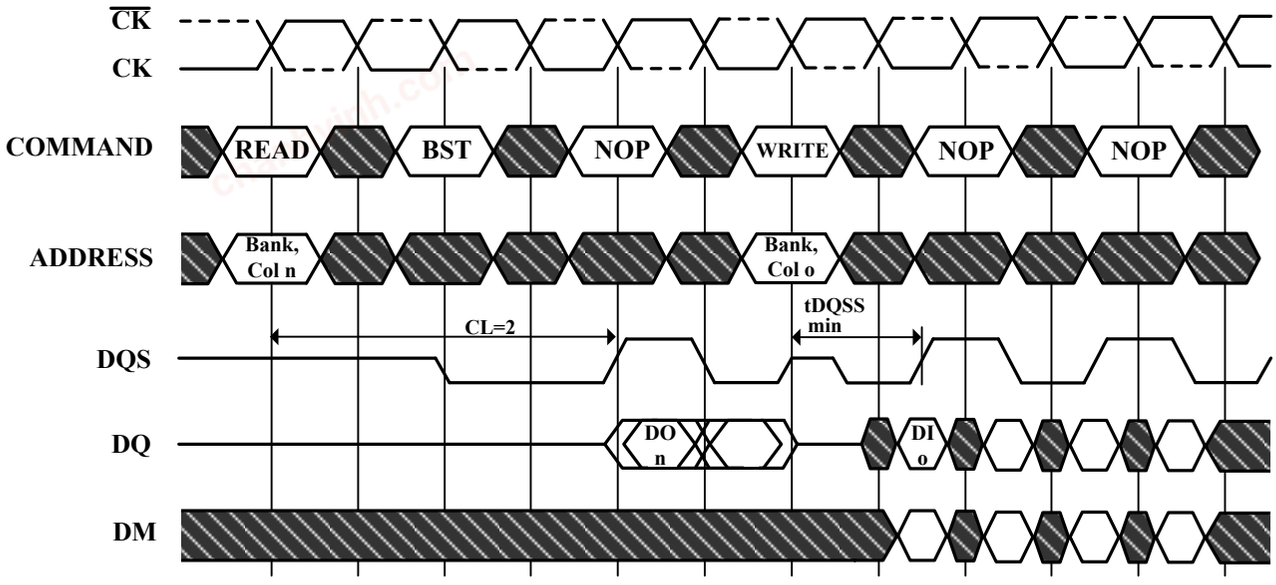

DO n (or o)= Data Out from column n (or column o)

Burst Length= 4 in the cases shown (applies for bursts of 8 as well; if burst length is 2, the BST command shown can be NOP)

1 subsequent element of Data Out appears in the programmed order following DO n

Data in elements are applied following DI o in the programmed order

Don't Care

chanhvinh.com

Read to Write Required CAS Latencies (CL=2.5)

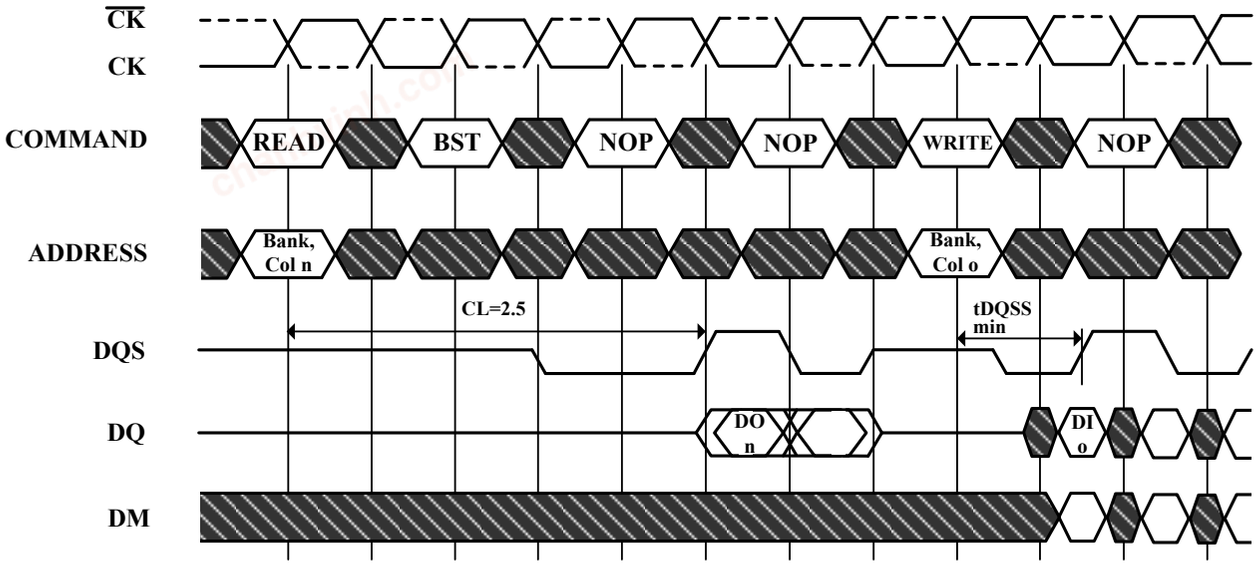

DO n (or o)= Data Out from column n (or column o)

Burst Length= 4 in the cases shown (applies for bursts of 8 as well; if burst length is 2, the BST command shown can be NOP)

1 subsequent element of Data Out appears in the programmed order following DO n

Data in elements are applied following DI o in the programmed order

Don't Care

chanhvinh.com

Read to Write Required CAS Latencies (CL=3)

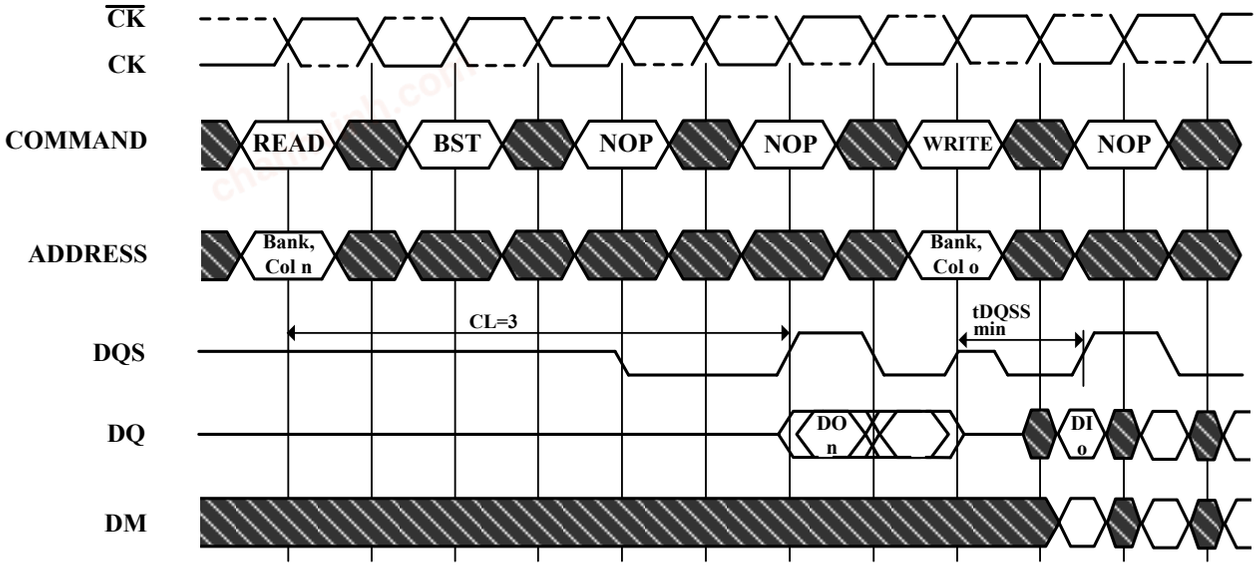

DO n (or o)= Data Out from column n (or column o)

Burst Length= 4 in the cases shown (applies for bursts of 8 as well; if burst length is 2, the BST command shown can be NOP)

1 subsequent element of Data Out appears in the programmed order following DO n

Data in elements are applied following DI o in the programmed order

Don't Care

chanhvinh.com

Figure 13. Read to Precharge Required CAS Latencies (CL=2)

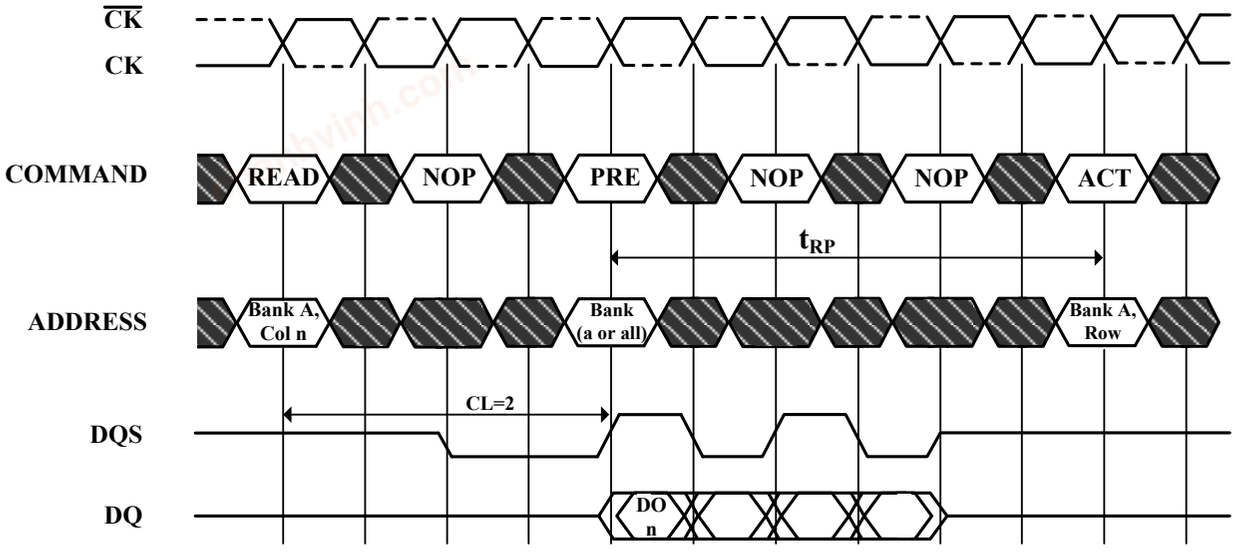

DO n = Data Out from column n

Cases shown are either uninterrupted bursts of 4, or interrupted bursts of 8

3 subsequent elements of Data Out appear in the programmed order following DO n

Precharge may be applied at (BL/2) tCK after the READ command

Note that Precharge may not be issued before tRAS ns after the ACTIVE command for applicable banks

The Active command may be applied if tRC has been met

Don't Care

chanhvinh.com

Read to Precharge Required CAS Latencies (CL=2.5)

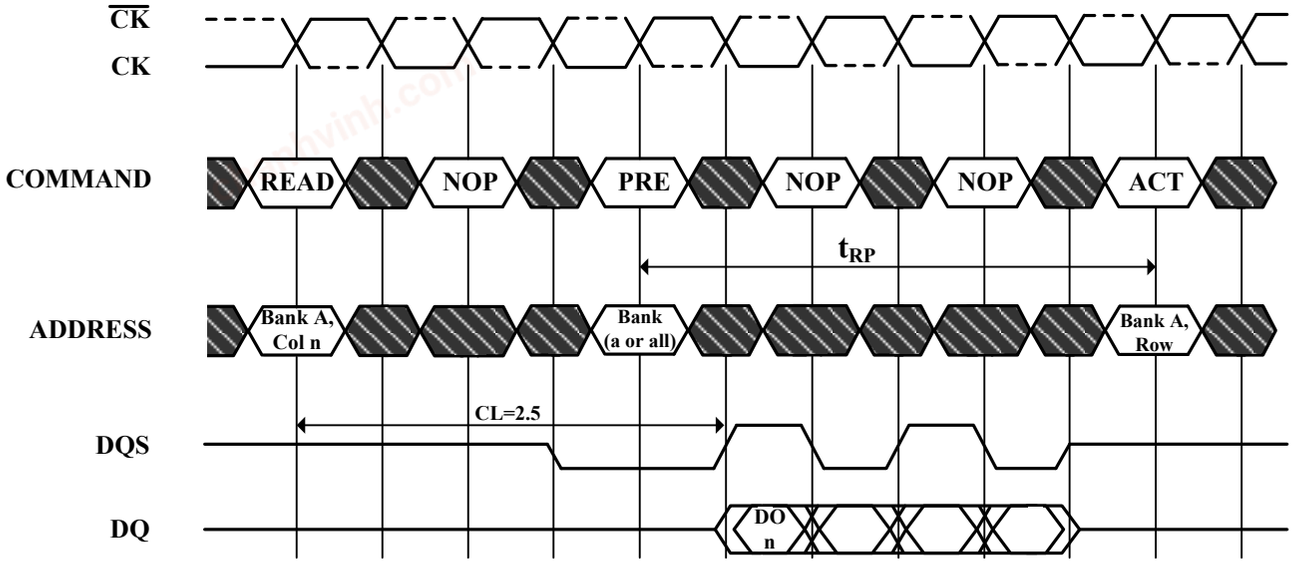

DO n = Data Out from column n

Cases shown are either uninterrupted bursts of 4, or interrupted bursts of 8

3 subsequent elements of Data Out appear in the programmed order following DO n

Precharge may be applied at (BL/2) tCK after the READ command

Note that Precharge may not be issued before tRAS ns after the ACTIVE command for applicable banks

The Active command may be applied if tRC has been met

Don't Care

chanhvinh.com

Read to Precharge Required CAS Latencies (CL=3)

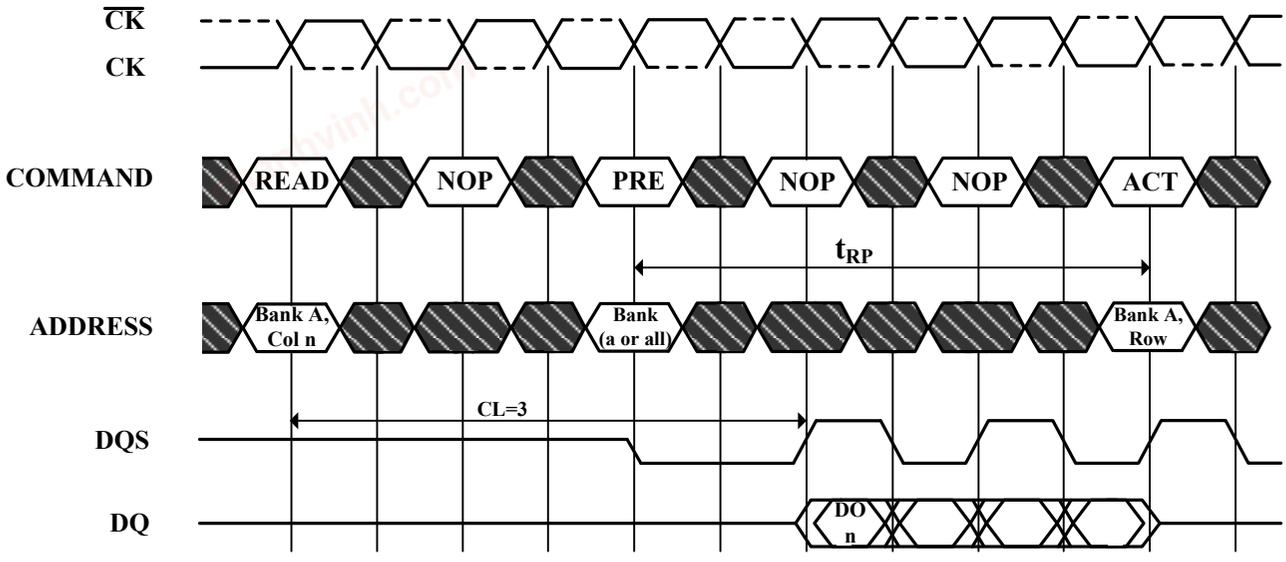

DO n = Data Out from column n

Cases shown are either uninterrupted bursts of 4, or interrupted bursts of 8

3 subsequent elements of Data Out appear in the programmed order following DO n

Precharge may be applied at (BL/2) tCK after the READ command

Note that Precharge may not be issued before tRAS ns after the ACTIVE command for applicable banks

The Active command may be applied if tRC has been met

Don't Care

chanhvinh.com

Figure 14. Write Command

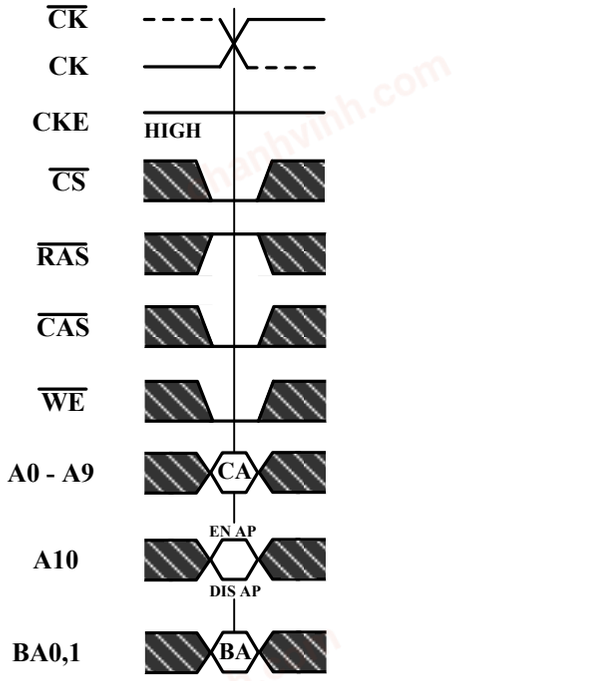

CA=Column Address
BA=Bank Address
EN AP=Enable Autoprecharge
DIS AP=Disable Autoprecharge

Don't Care

chanhvinh.com

Figure 15. Write Max DQSS

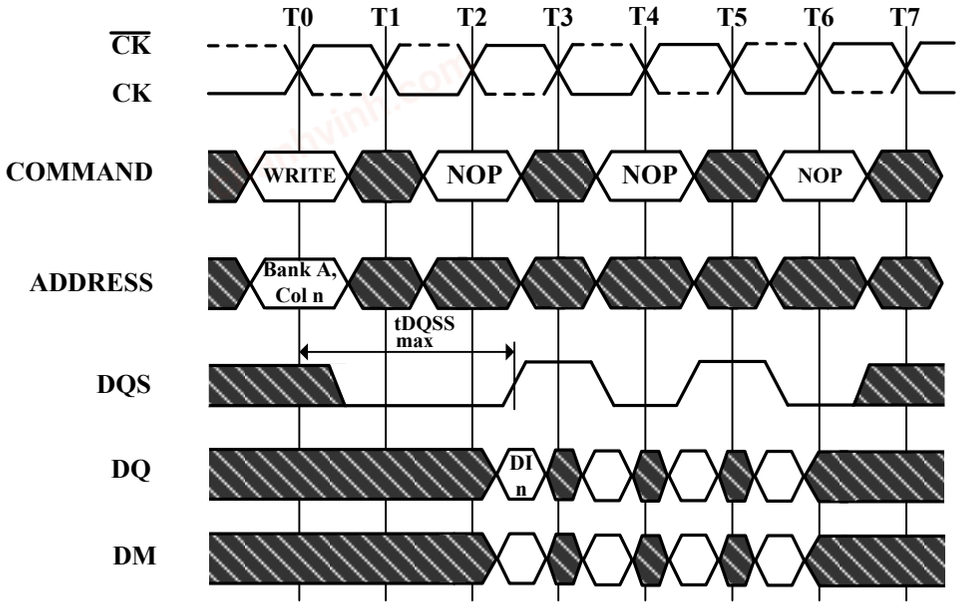

DI n = Data In for column n

3 subsequent elements of Data In are applied in the programmed order following DI n

A non-interrupted burst of 4 is shown

A10 is LOW with the WRITE command (AUTO PRECHARGE disabled)

Don't Care

chanhvinh.com

Figure 16. Write Min DQSS

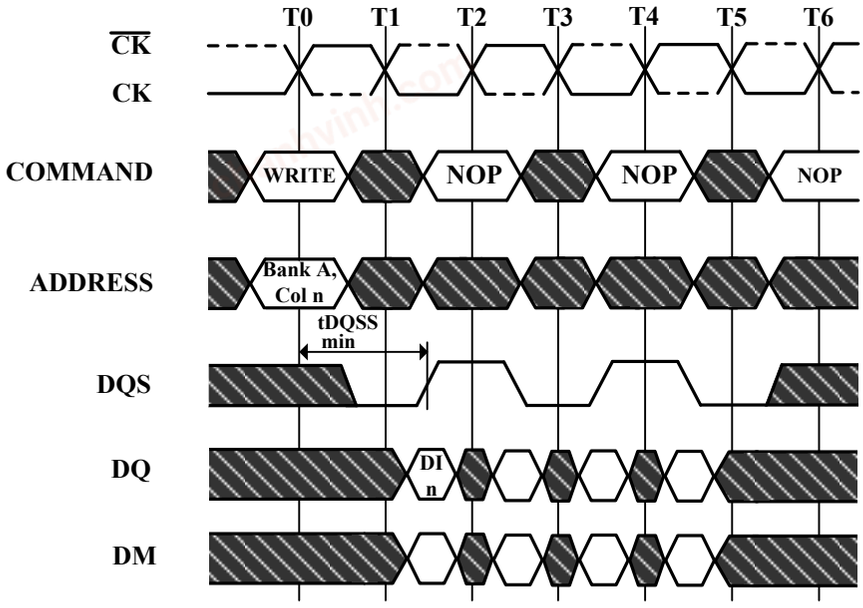

DI n = Data In for column n

3 subsequent elements of Data In are applied in the programmed order following DI n

A non-interrupted burst of 4 is shown

A10 is LOW with the WRITE command (AUTO PRECHARGE disabled)

Don't Care

chanhvinh.com

Figure 17. Write Burst Nom, Min, and Max tDQSS

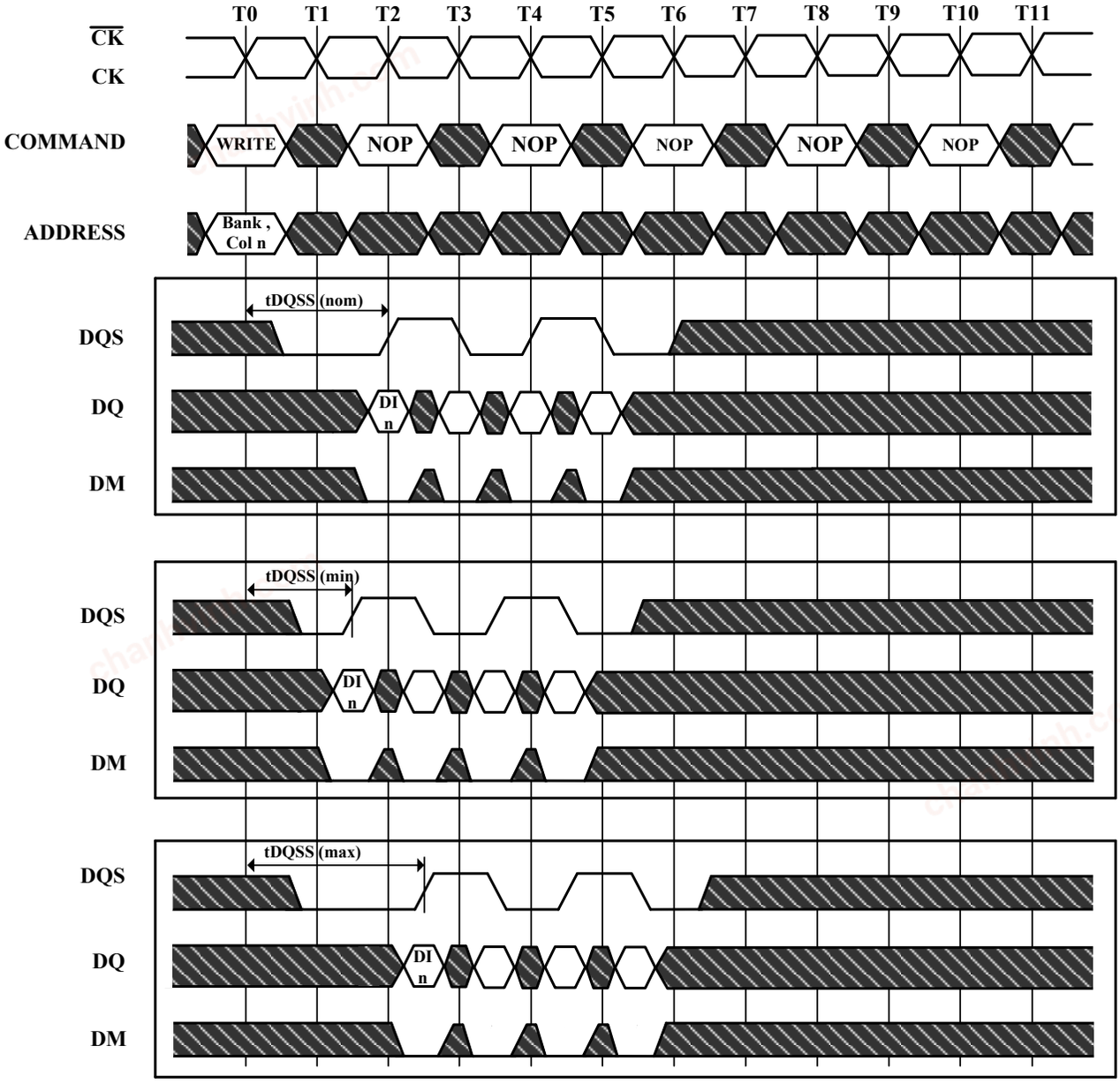

DI n = Data In for column n
3 subsequent elements of Data are applied in the programmed order following DI n
A non-interrupted burst of 4 is shown
A10 is LOW with the WRITE command (AUTO PRECHARGE disabled)
DM=UDM & LDM

Don't Care

chanhvinh.com

Figure 18. Write to Write Max tDQSS

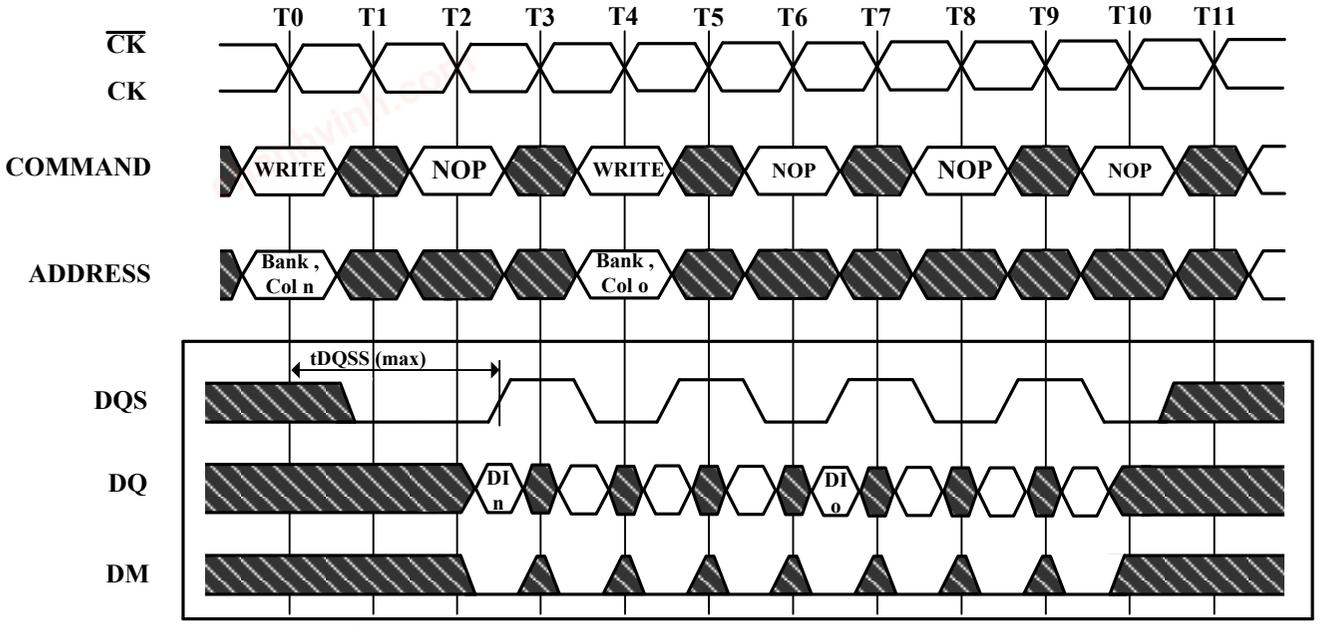

DI n , etc. = Data In for column n,etc.
3 subsequent elements of Data In are applied in the programmed order following DI n
3 subsequent elements of Data In are applied in the programmed order following DI o
Non-interrupted bursts of 4 are shown
DM= UDM & LDM

Don't Care

chanhvinh.com

Figure 19. Write to Write Max tDQSS, Non Consecutive

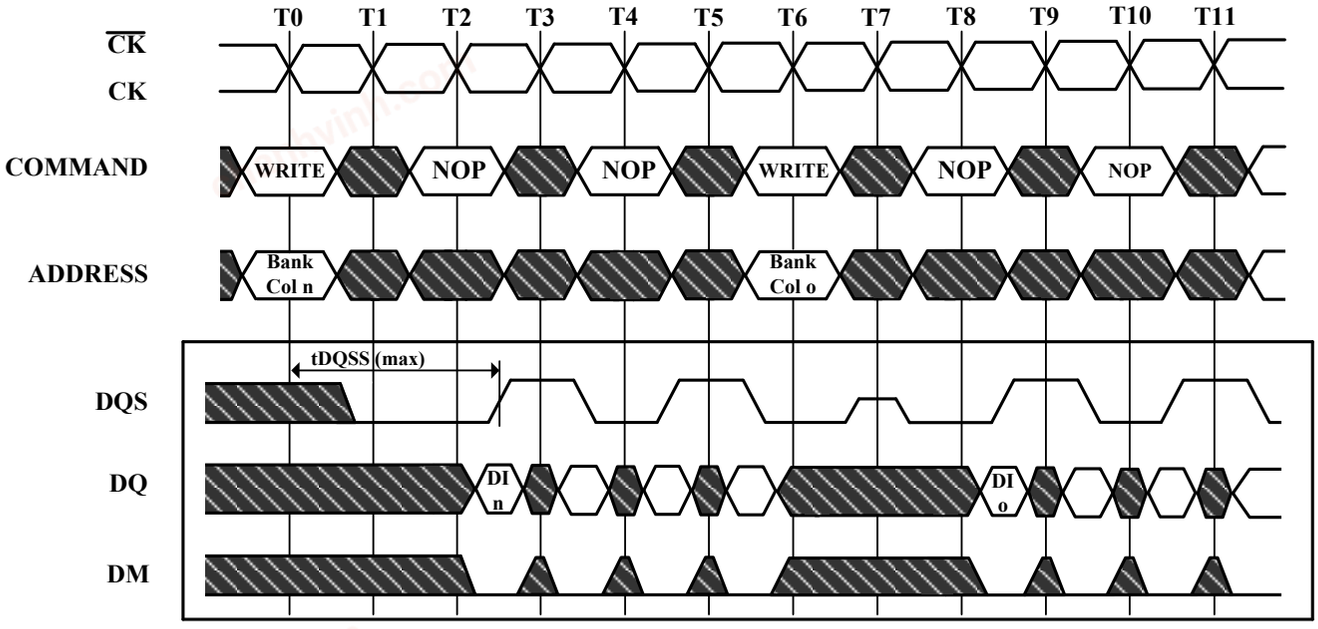

DI n, etc. = Data In for column n, etc.
3 subsequent elements of Data In are applied in the programmed order following DI n
3 subsequent elements of Data In are applied in the programmed order following DI o
Non-interrupted bursts of 4 are shown
DM= UDM & LDM

Don't Care

chanhvinh.com

Figure 20. Random Write Cycles Max tDQSS

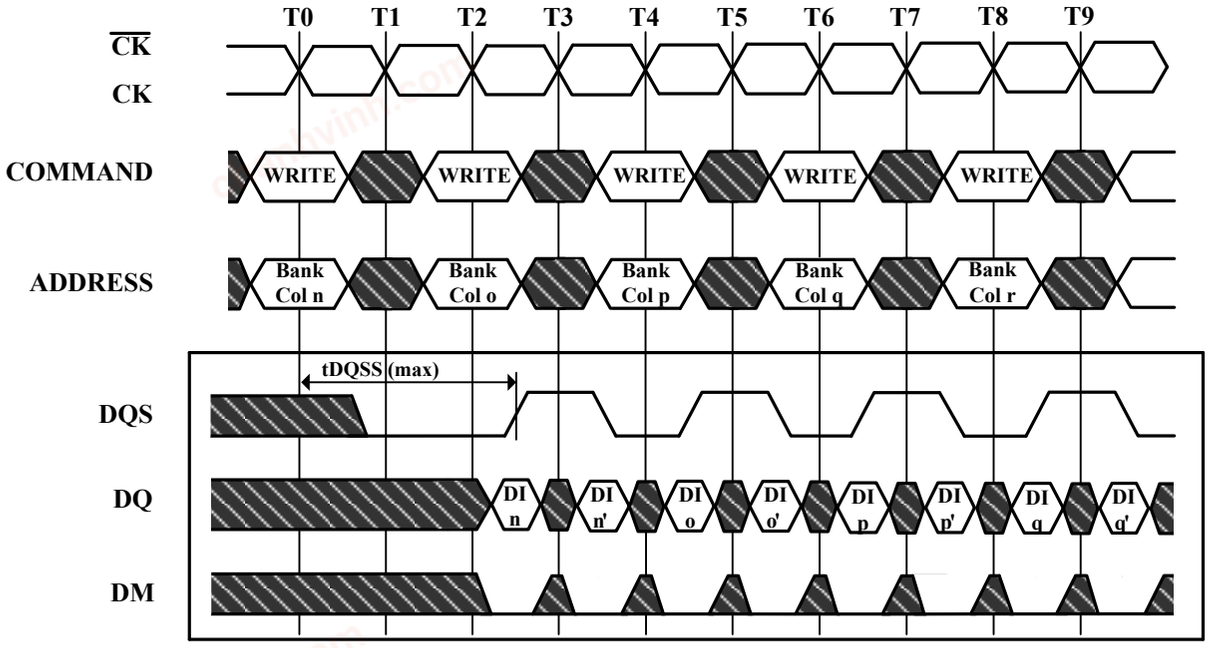

DI n, etc. = Data In for column n, etc.
n', etc. = the next Data In following DI n, etc. according to the programmed burst order
Programmed Burst Length 2, 4, or 8 in cases shown
If burst of 4 or 8, the burst would be truncated
Each WRITE command may be to any bank and may be to the same or different devices
DM= UDM & LDM

Don't Care

chanhvinh.com

Figure 21. Write to Read Max tDQSS Non Interrupting

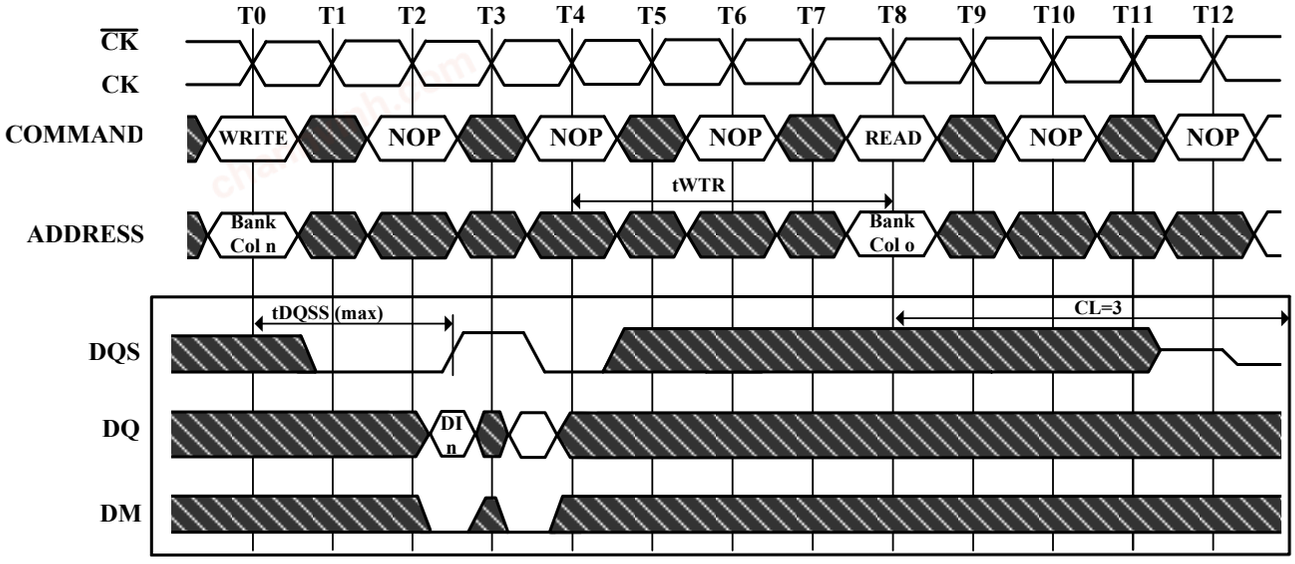

DI n, etc. = Data In for column n, etc.

1 subsequent elements of Data In are applied in the programmed order following DI n

A non-interrupted burst of 2 is shown

tWTR is referenced from the first positive CK edge after the last Data In Pair

A10 is LOW with the WRITE command (AUTO PRECHARGE is disabled)

The READ and WRITE commands are to the same devices but not necessarily to the same bank

DM= UDM & LDM

Don't Care

chanhvinh.com

Figure 22. Write to Read Max tDQSS Interrupting

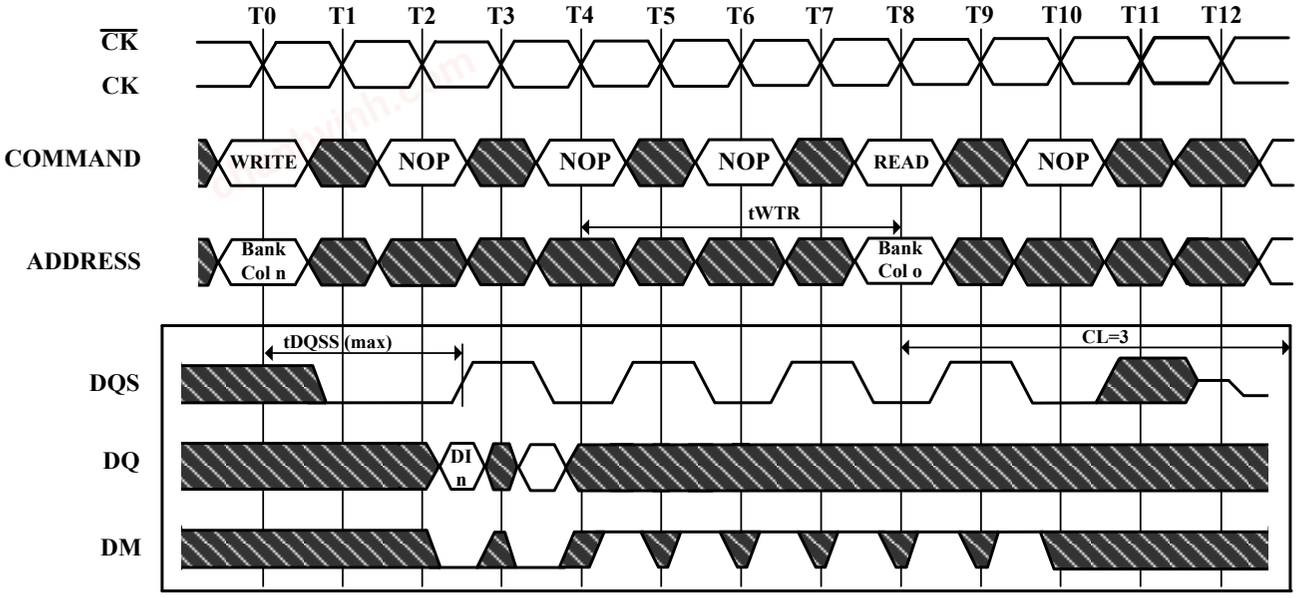

DI n, etc. = Data In for column n, etc.

1 subsequent elements of Data In are applied in the programmed order following DI n

An interrupted burst of 8 is shown, 2 data elements are written

tWTR is referenced from the first positive CK edge after the last Data In Pair

A10 is LOW with the WRITE command (AUTO PRECHARGE is disabled)

The READ and WRITE commands are to the same devices but not necessarily to the same bank

DM= UDM & LDM

Don't Care

chanhvinh.com

Figure 23. Write to Read Max tDQSS, ODD Number of Data, Interrupting

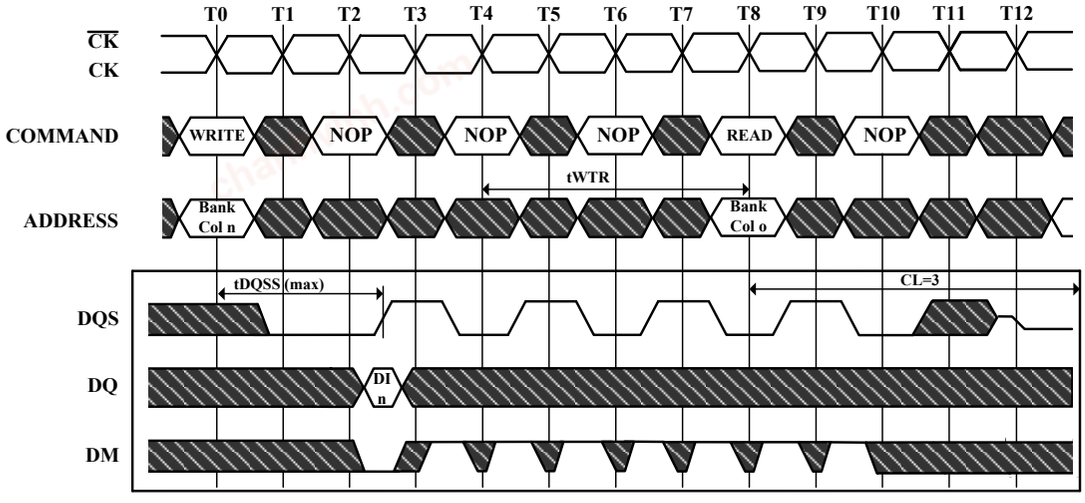

DI n = Data In for column n

An interrupted burst of 8 is shown, 1 data elements are written

tWTR is referenced from the first positive CK edge after the last Data In Pair (not the last desired Data In element)

A10 is LOW with the WRITE command (AUTO PRECHARGE is disabled)

The READ and WRITE commands are to the same devices but not necessarily to the same bank

DM= LDM & UDM

Don't Care

chanhvinh.com

Figure 24. Write to Precharge Max tDQSS, NON- Interrupting

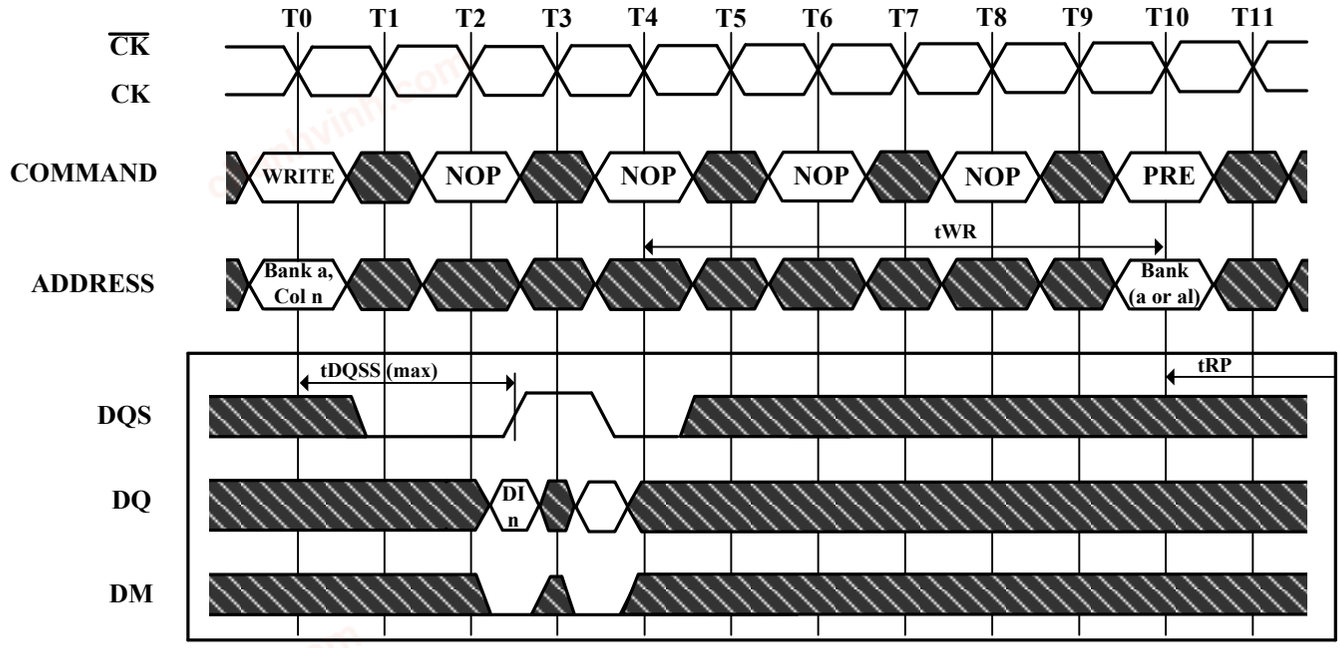

DI n = Data In for column n

1 subsequent elements of Data In are applied in the programmed order following DI n

A non-interrupted burst of 2 is shown

tWR is referenced from the first positive CK edge after the last Data In Pair

A10 is LOW with the WRITE command (AUTO PRECHARGE is disabled)

DM= UDM & LDM

Don't Care

chanhvinh.com

Figure 25. Write to Precharge Max tDQSS, Interrupting

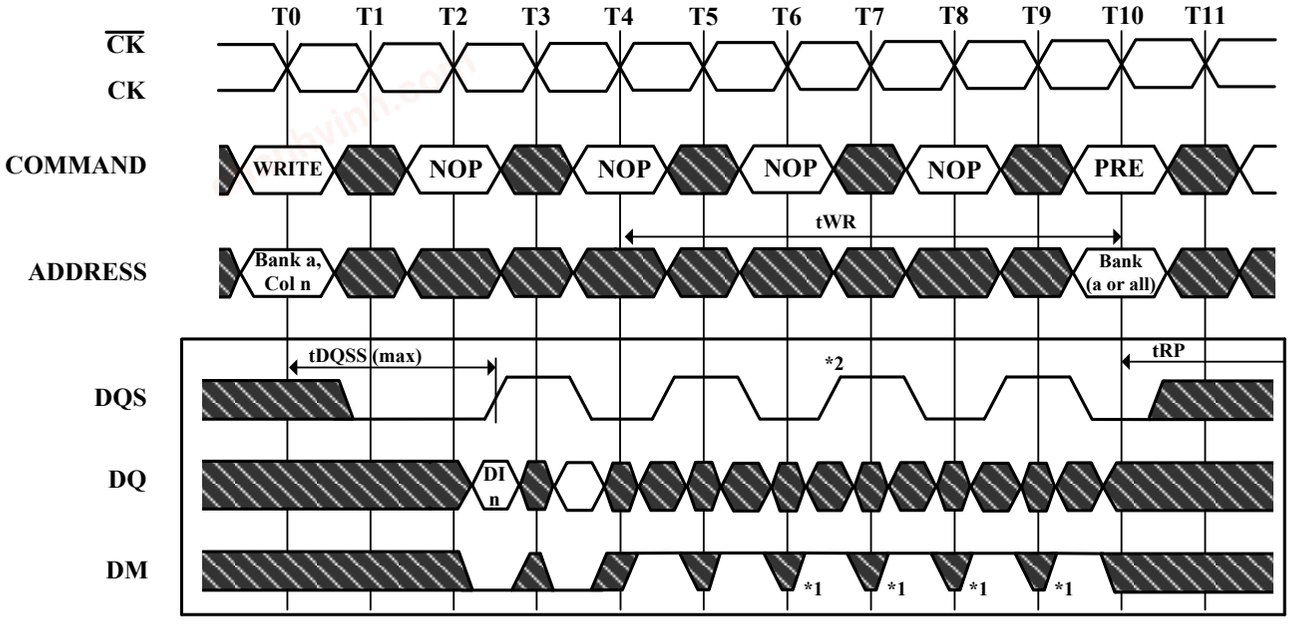

DI n = Data In for column n
An interrupted burst of 4 or 8 is shown, 2 data elements are written
tWR is referenced from the first positive CK edge after the last Data In Pair
A10 is LOW with the WRITE command (AUTO PRECHARGE is disabled)
*1 = can be don't care for programmed burst length of 4
*2 = for programmed burst length of 4, DQS becomes don't care at this point
DM= UDM & LDM

Don't Care

chanhvinh.com

Figure 26. Write to Precharge Max tDQSS ODD Number of Data Interrupting

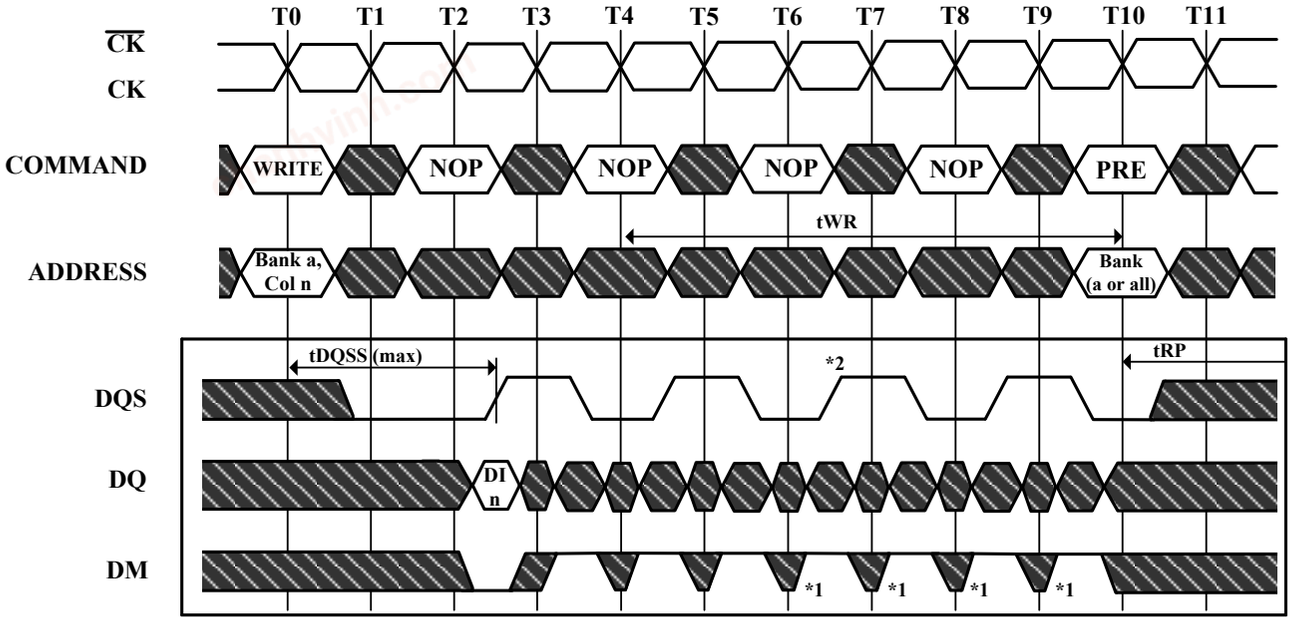

DI n = Data In for column n
An interrupted burst of 4 or 8 is shown, 1 data element is written
tWR is referenced from the first positive CK edge after the last Data In Pair
A10 is LOW with the WRITE command (AUTO PRECHARGE is disabled)
*1 = can be don't care for programmed burst length of 4
*2 = for programmed burst length of 4, DQS becomes don't care at this point
DM= UDM & LDM

Don't Care

chanhvinh.com

Figure 27. Precharge Command

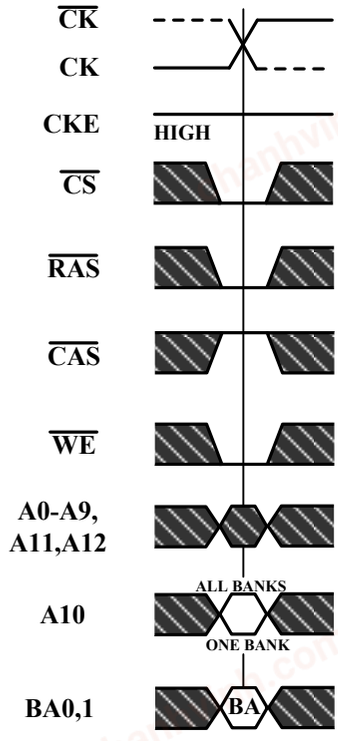

BA= Bank Address (if A10 is LOW, otherwise don't care)

Don't Care

chanhvinh.com

Figure 28. Power-Down

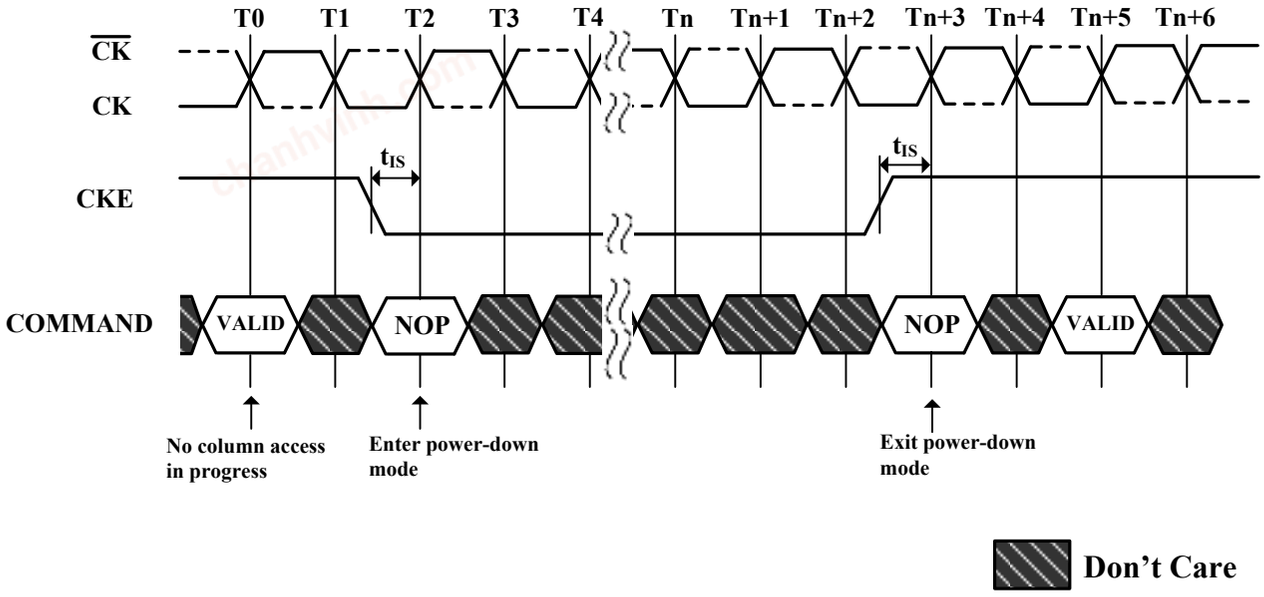

Figure 29. Clock Frequency Change in Precharge

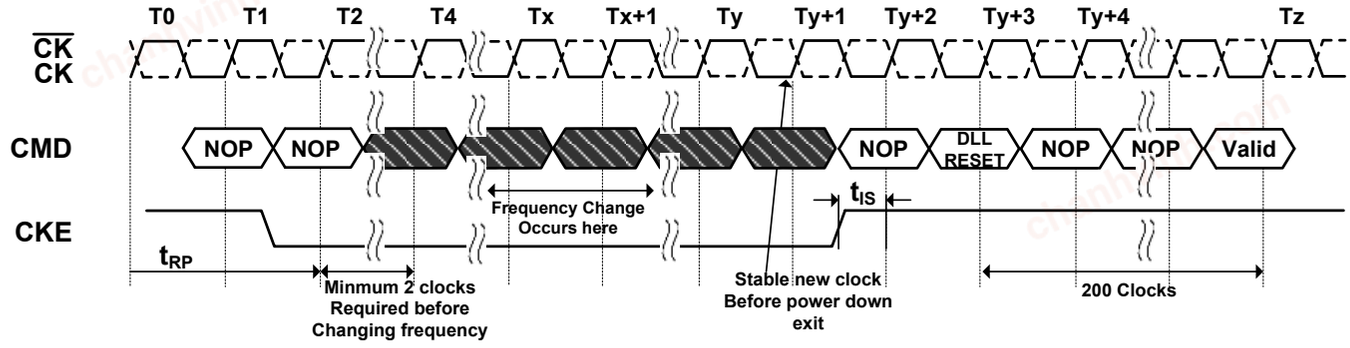

chanhvinh.com

Figure 30. Data input (Write) Timing

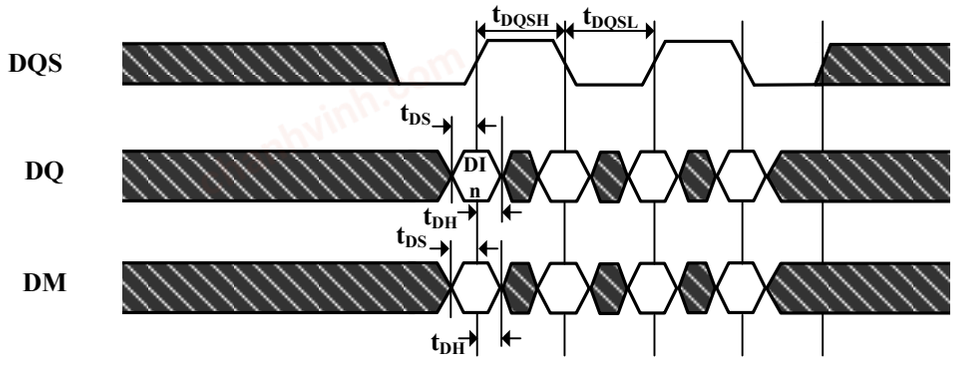

DI n = Data In for column n

Burst Length = 4 in the case shown

3 subsequent elements of Data In are applied in the programmed order following DI n

Don't Care

Figure 31. Data Output (Read) Timing

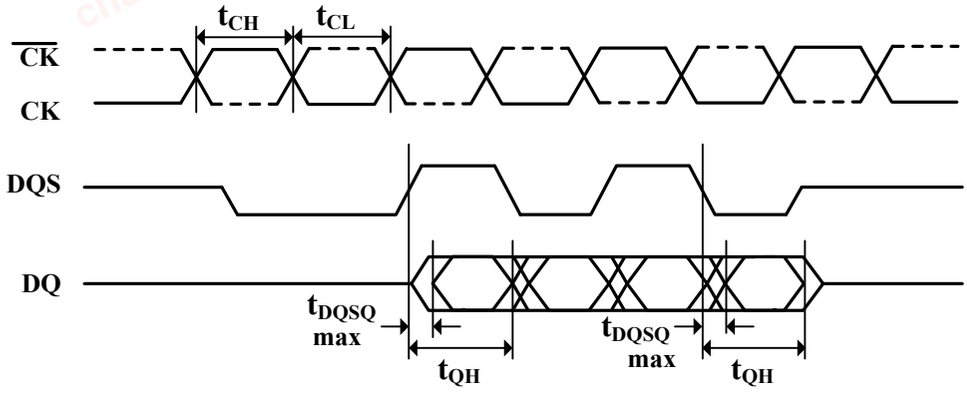

Burst Length = 4 in the case shown

chanhvinh.com

Figure 32. Initialize and Mode Register Sets

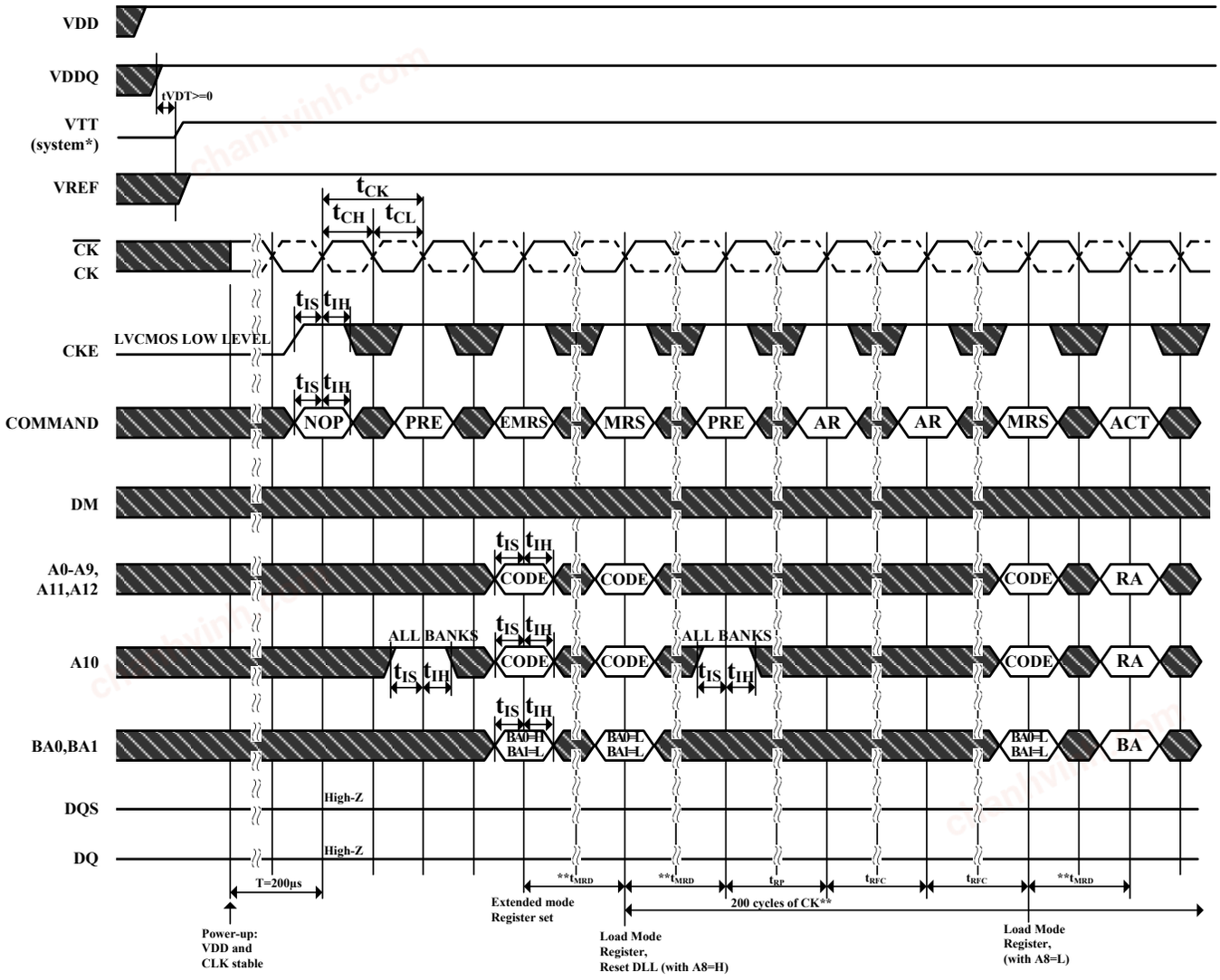

*=VTT is not applied directly to the device, however tVTD must be greater than or equal to zero to avoid device latch-up.
** = tMRD is required before any command can be applied, and 200 cycles of CK are required before any executable command can be applied the two auto Refresh commands may be moved to follow the first MRS but precede the second PRECHARGE ALL command.

Don't Care

chanhvinh.com

Figure 33. Power Down Mode

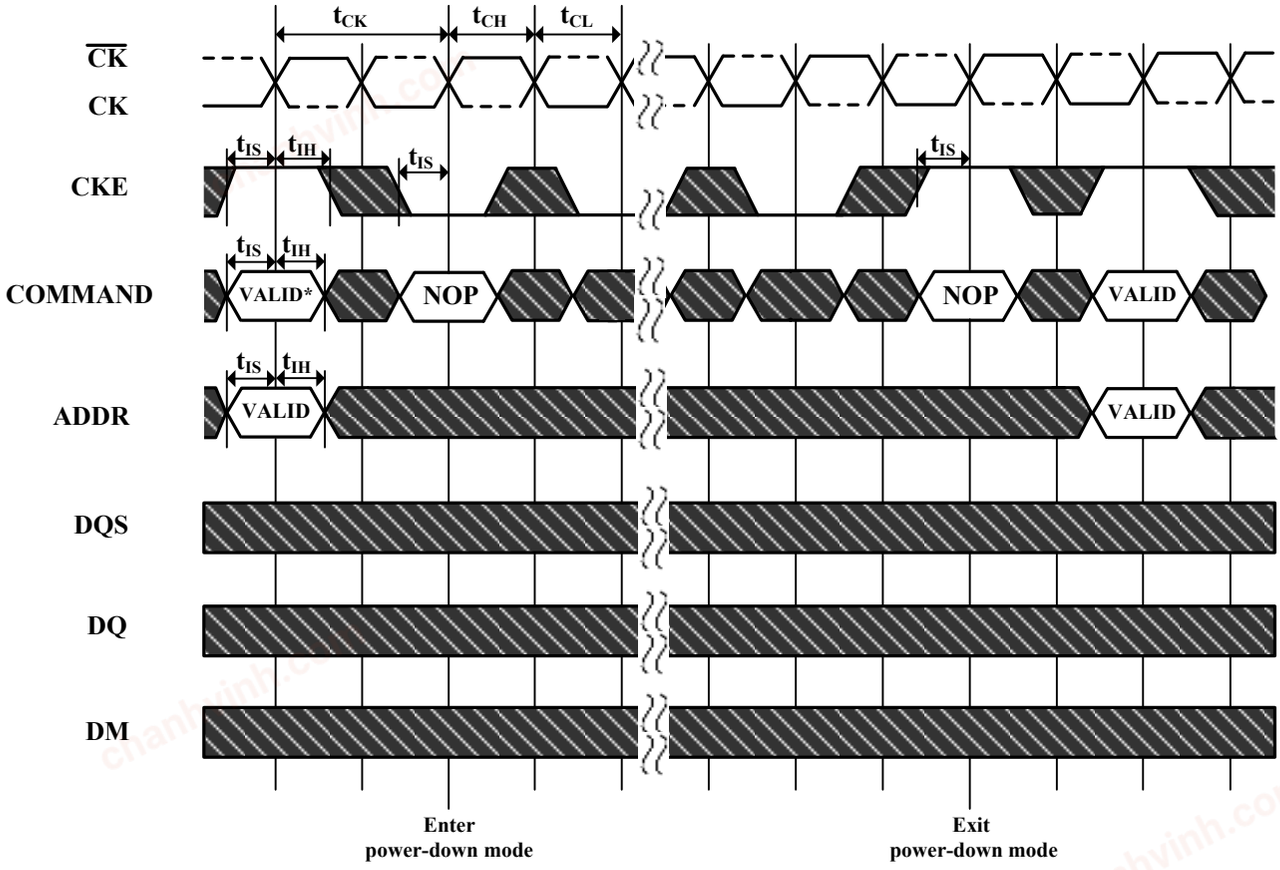

No column accesses are allowed to be in progress at the time Power-Down is entered

*=If this command is a PRECHARGE ALL (or if the device is already in the idle state) then the Power-Down mode shown is Precharge Power Down. If this command is an ACTIVE (or if at least one row is already active) then the Power-Down mode shown is active Power Down.

Don't Care

chanhvinh.com

Figure 34. Auto Refresh Mode

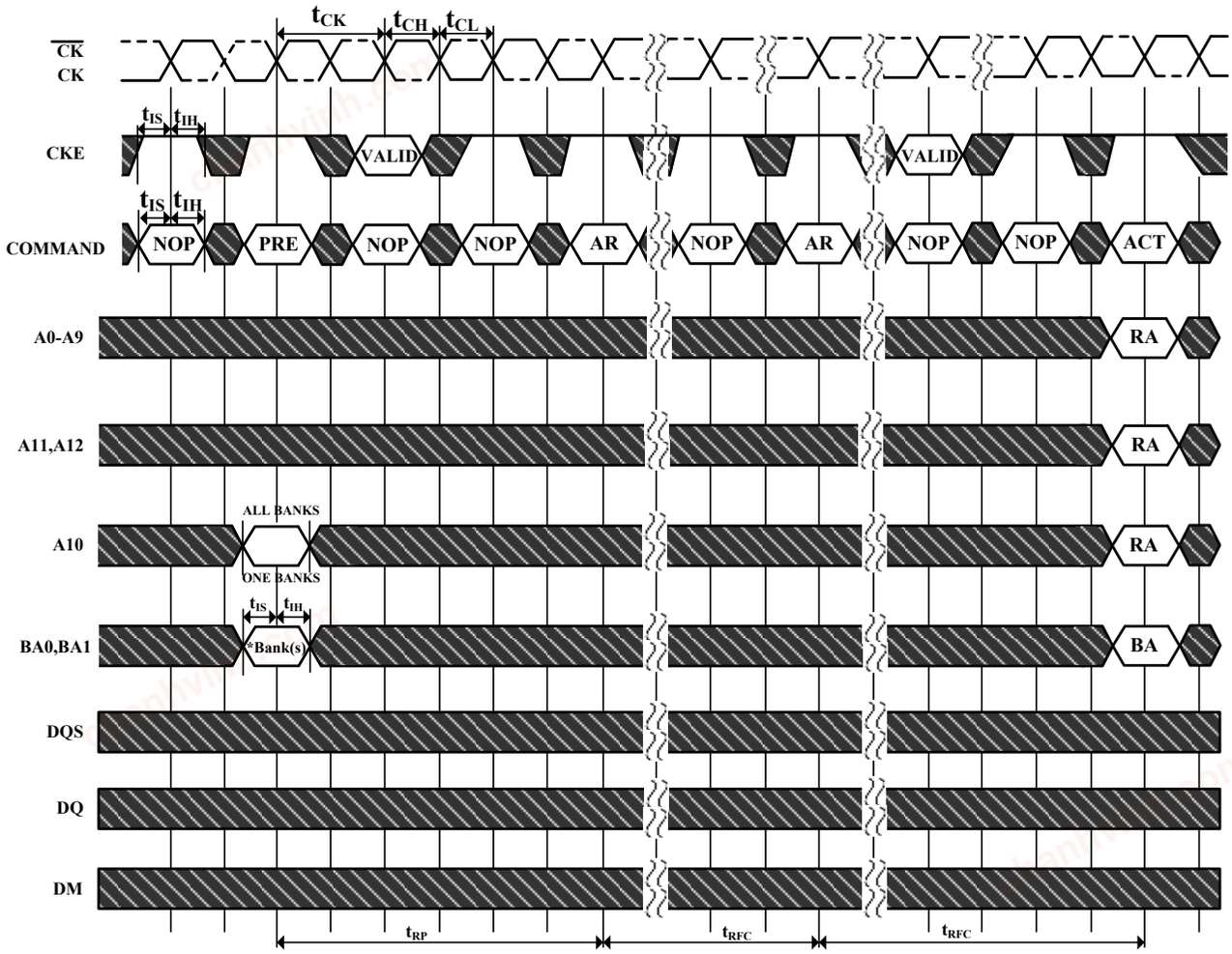

* = "Don't Care", if A10 is HIGH at this point; A10 must be HIGH if more than one bank is active (i.e., must precharge all active banks)
PRE = PRECHARGE, ACT = ACTIVE, RA = Row Address, BA = Bank Address, AR = AUTOREFRESH
NOP commands are shown for ease of illustration; other valid commands may be possible after tRFC
DM, DQ and DQS signals are all "Don't Care"/High-Z for operations shown

Don't Care

chanhvinh.com

Figure 35. Self Refresh Mode

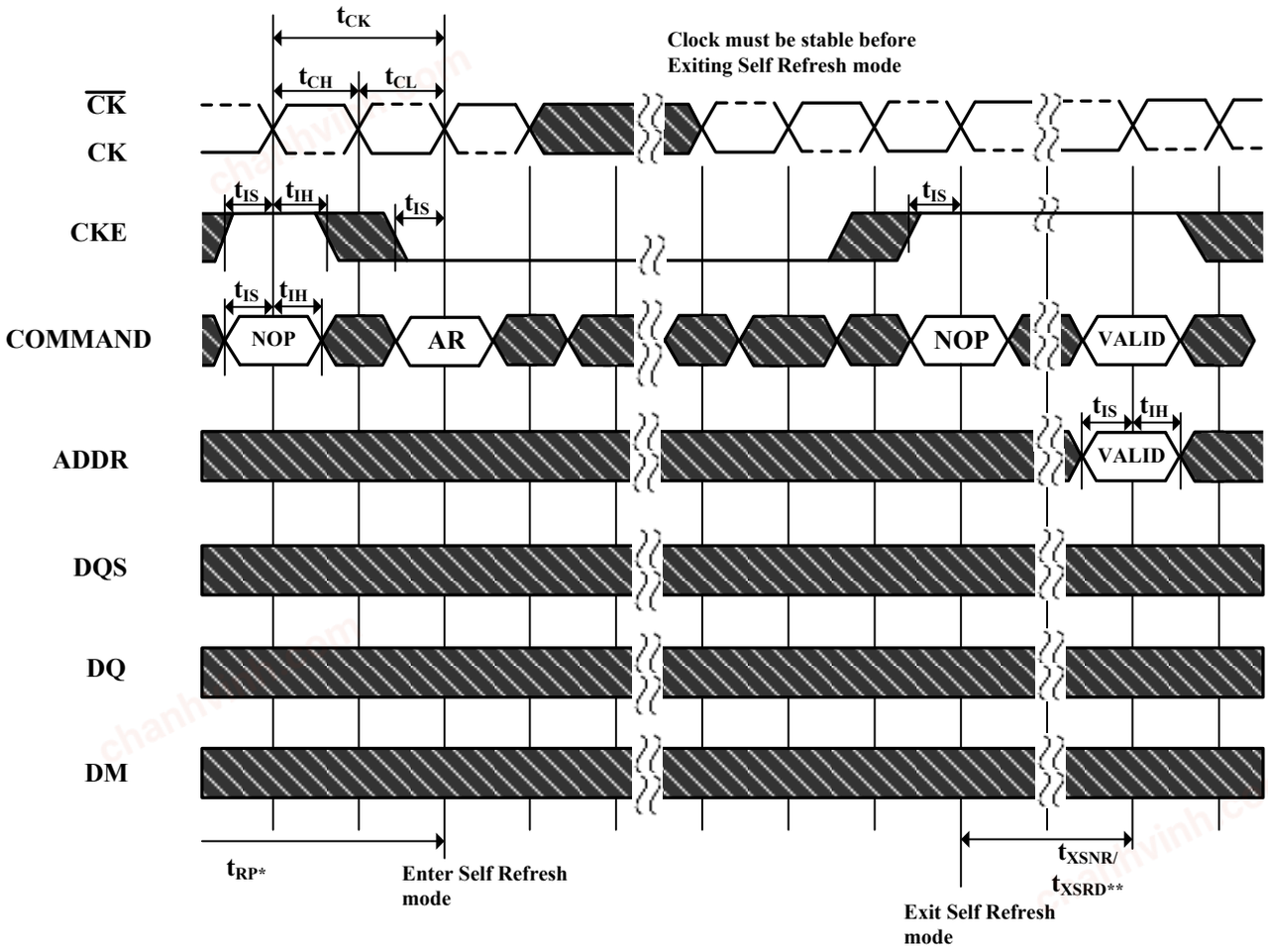

* = Device must be in the "All banks idle" state prior to entering Self Refresh mode

** = tXSNR is required before any non-READ command can be applied, and tXSRD (200 cycles of CK) is required before a READ command can be applied.

Don't Care

chanhvinh.com

Figure 36. Read without Auto Precharge

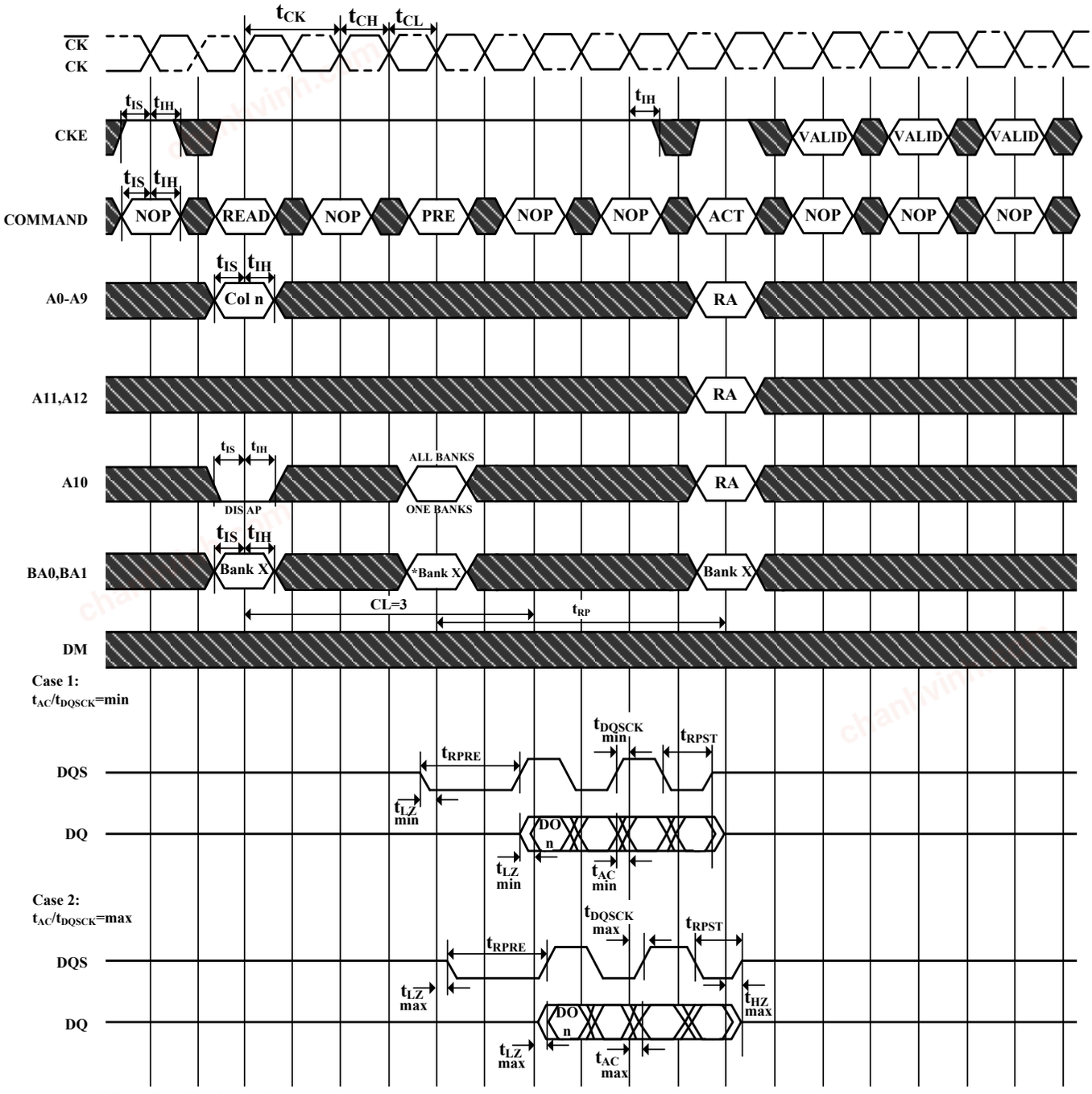

DO n = Data Out from column n

Burst Length = 4 in the case shown

3 subsequent elements of Data Out are provided in the programmed order following DO n

DIS AP = Disable Autoprecharge

* = "Don't Care", if A10 is HIGH at this point

PRE = PRECHARGE, ACT = ACTIVE, RA = Row Address, BA = Bank Address, AR = AUTOREFRESH

NOP commands are shown for ease of illustration; other commands may be valid at these times

Precharge may not be issued before tRAS ns after the ACTIVE command for applicable banks

Don't Care

chanhvinh.com

Figure 37. Read with Auto Precharge

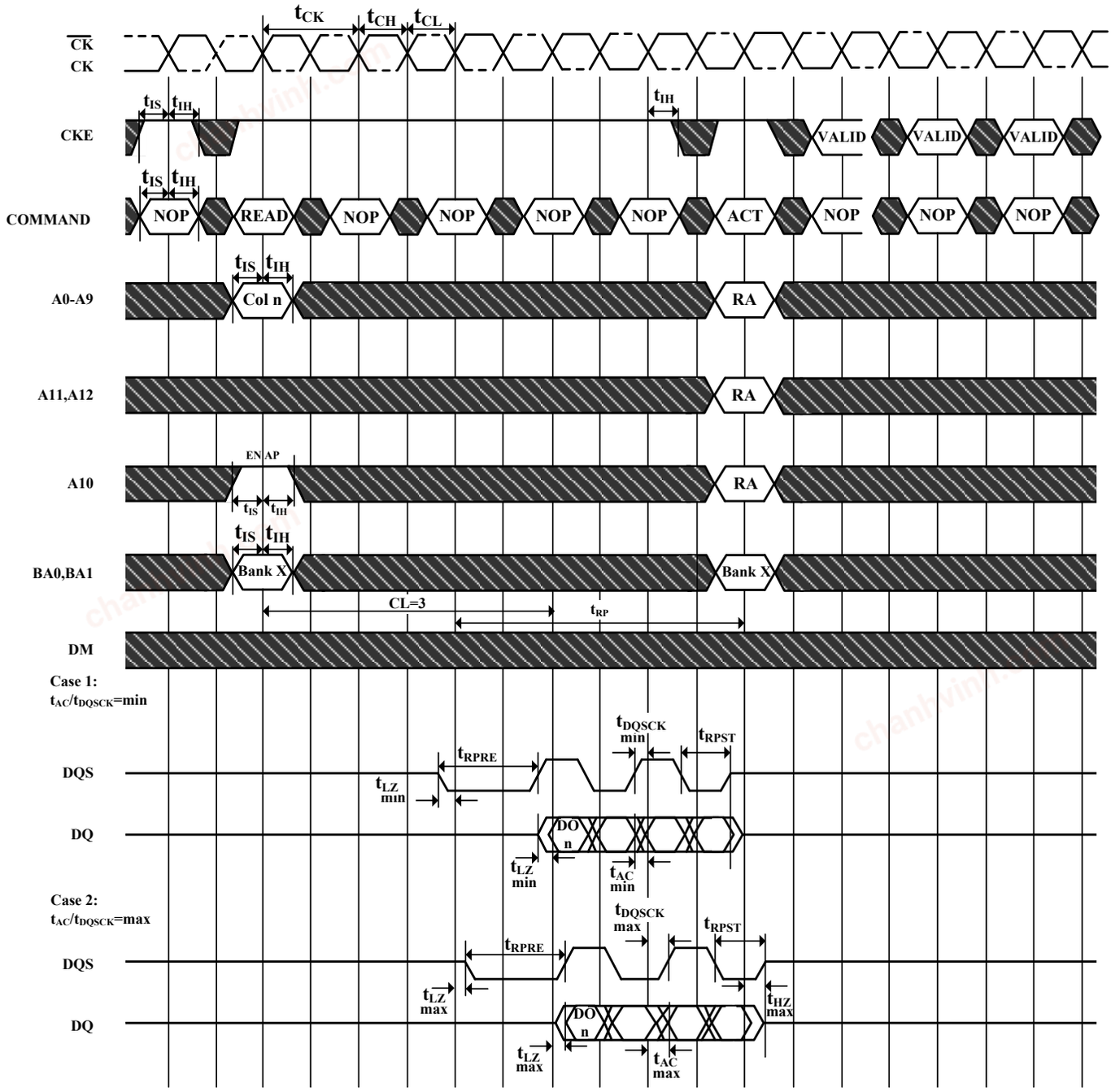

DO n = Data Out from column n

Burst Length = 4 in the case shown

3 subsequent elements of Data Out are provided in the programmed order following DO n

EN AP = Enable Autoprecharge

ACT = ACTIVE, RA = Row Address

NOP commands are shown for ease of illustration; other commands may be valid at these times

The READ command may not be issued until tRAP has been satisfied. If Fast Autoprecharge is supported, tRAP = tRCD, else the READ may not be issued prior to tRASmin – (BL*tCK/2)

Don't Care

chanhvinh.com

Figure 38. Bank Read Access

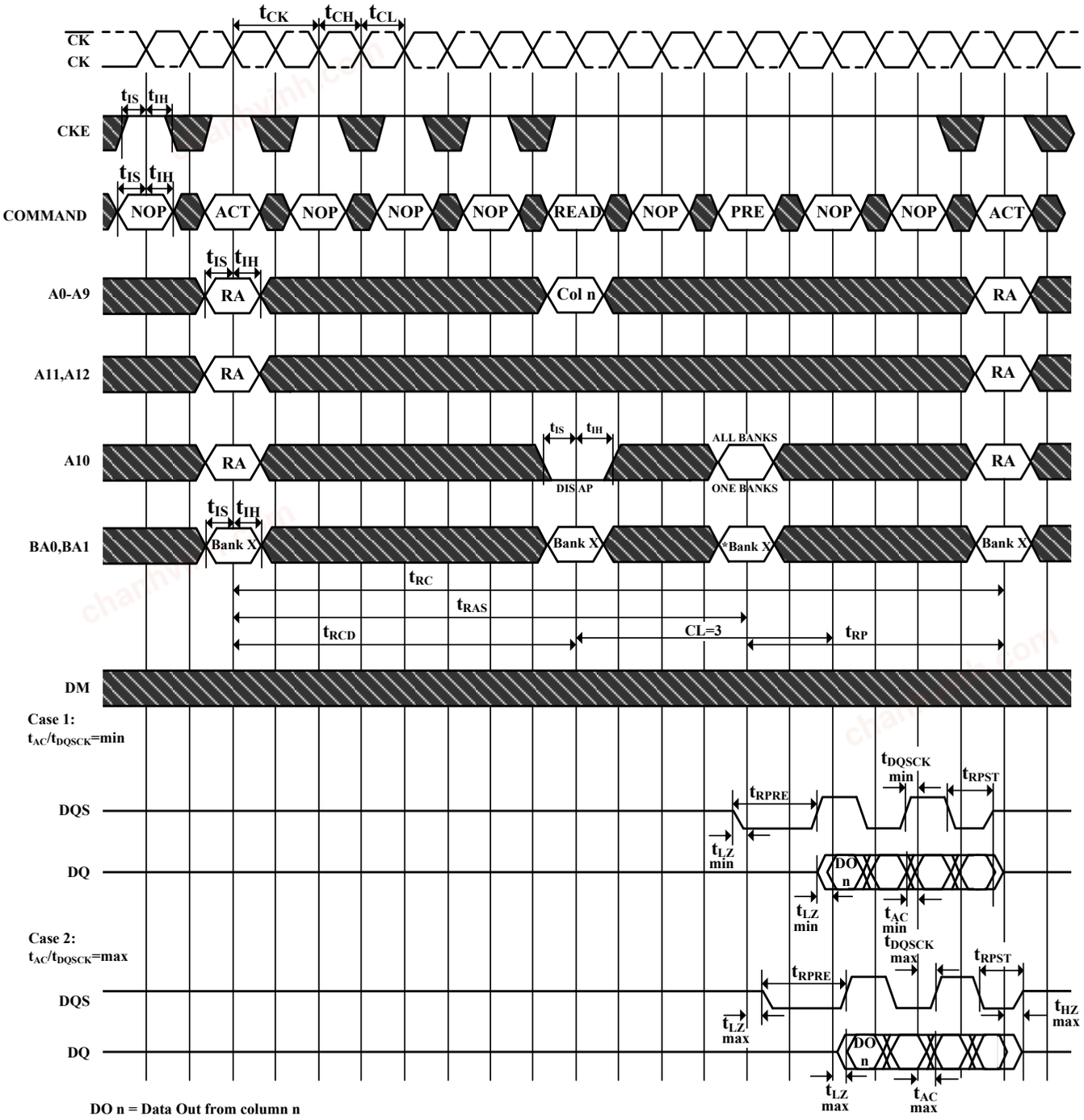

DO n = Data Out from column n
Burst Length = 4 in the case shown
3 subsequent elements of Data Out are provided in the programmed order following DO n
DIS AP = Disable Autoprecharge
* = " Don't Care" , if A10 is HIGH at this point
PRE = PRECHARGE, ACT = ACTIVE, RA = Row Address, BA = Bank Address
NOP commands are shown for ease of illustration; other commands may be valid at these times
Note that tRCD > tRCD MIN so that the same timing applies if Autoprecharge is enabled (in which case tRAS would be limiting)

Don't Care

chanhvinh.com

Figure 39. Write without Auto Precharge

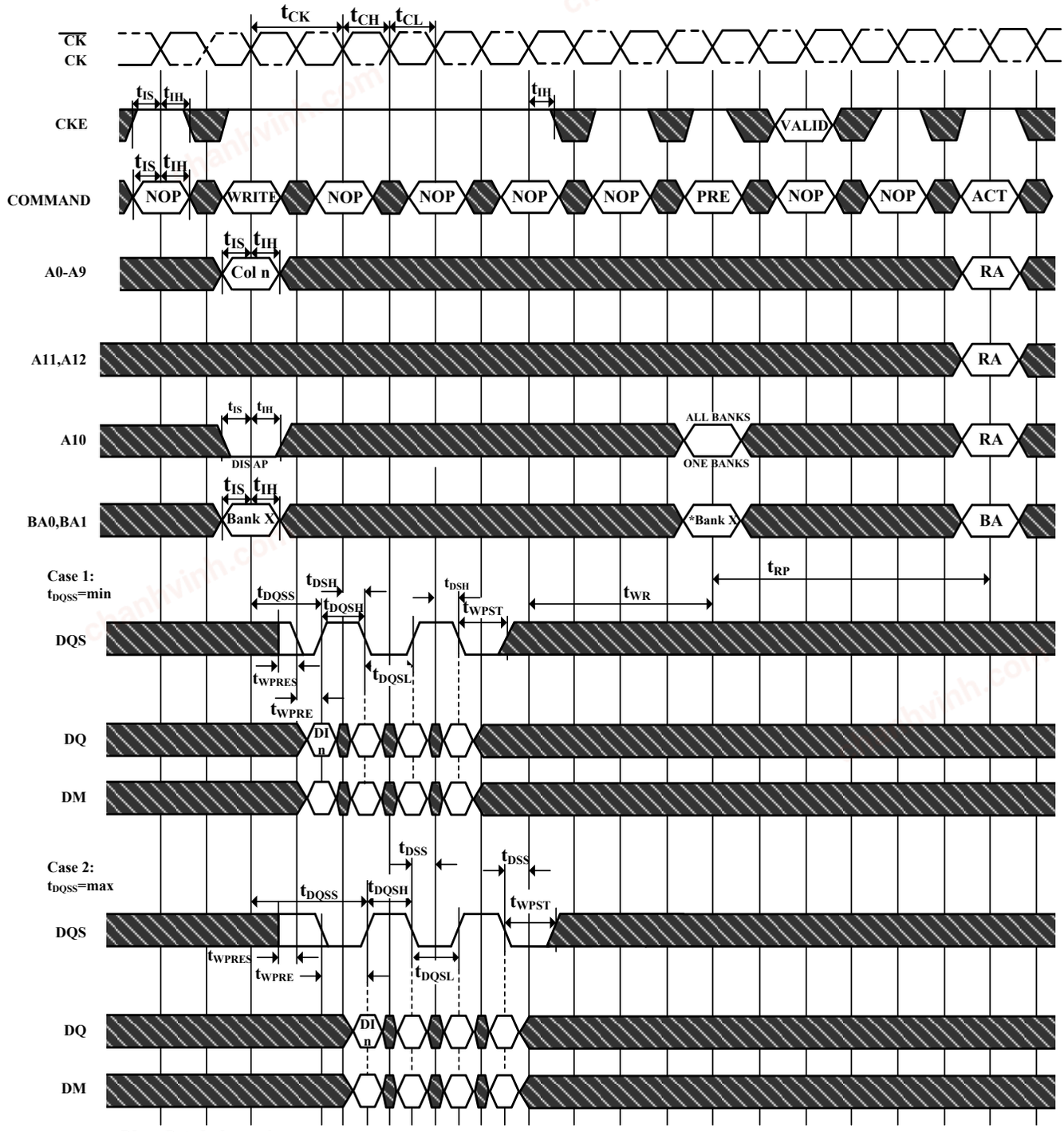

DI n = Data In from column n

Burst Length = 4 in the case shown

3 subsequent elements of Data In are provided in the programmed order following DI n

DIS AP = Disable Autoprecharge

*=" Don't Care" , if A10 is HIGH at this point

PRE = PRECHARGE, ACT = ACTIVE, RA = Row Address, BA = Bank Address, AR = AUTOREFRESH

NOP commands are shown for ease of illustration; other commands may be valid at these times

Although tDQSS is drawn only for the first DQS rising edge, each rising edge of DQS must fall within the ± 25% window of the corresponding positive clock edge

Precharge may not be issued before tRAS ns after the ACTIVE command for applicable banks

Don't Care

chanhvinh.com

Figure 40. Write with Auto Precharge

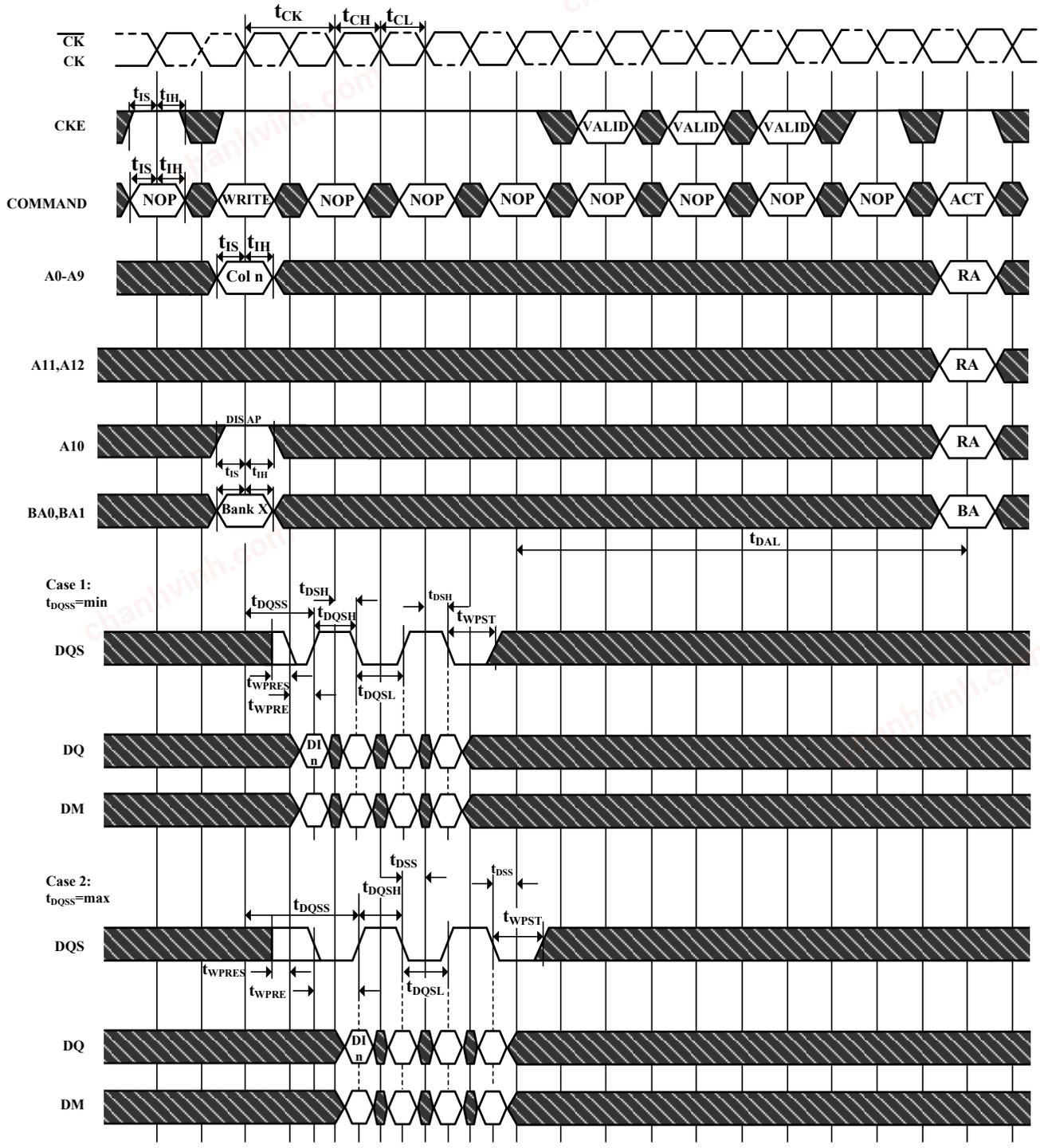

DI n = Data In from column n

Burst Length = 4 in the case shown

3 subsequent elements of Data Out are provided in the programmed order following DI n

EN AP = Enable Autoprecharge

ACT = ACTIVE, RA = Row Address, BA = Bank Address

NOP commands are shown for ease of illustration; other commands may be valid at these times

Although tDQSS is drawn only for the first DQS rising edge, each rising edge of DQS must fall within the ± 25% window of the corresponding positive clock edge

Don't Care

chanhvinh.com

Figure 41. Bank Write Access

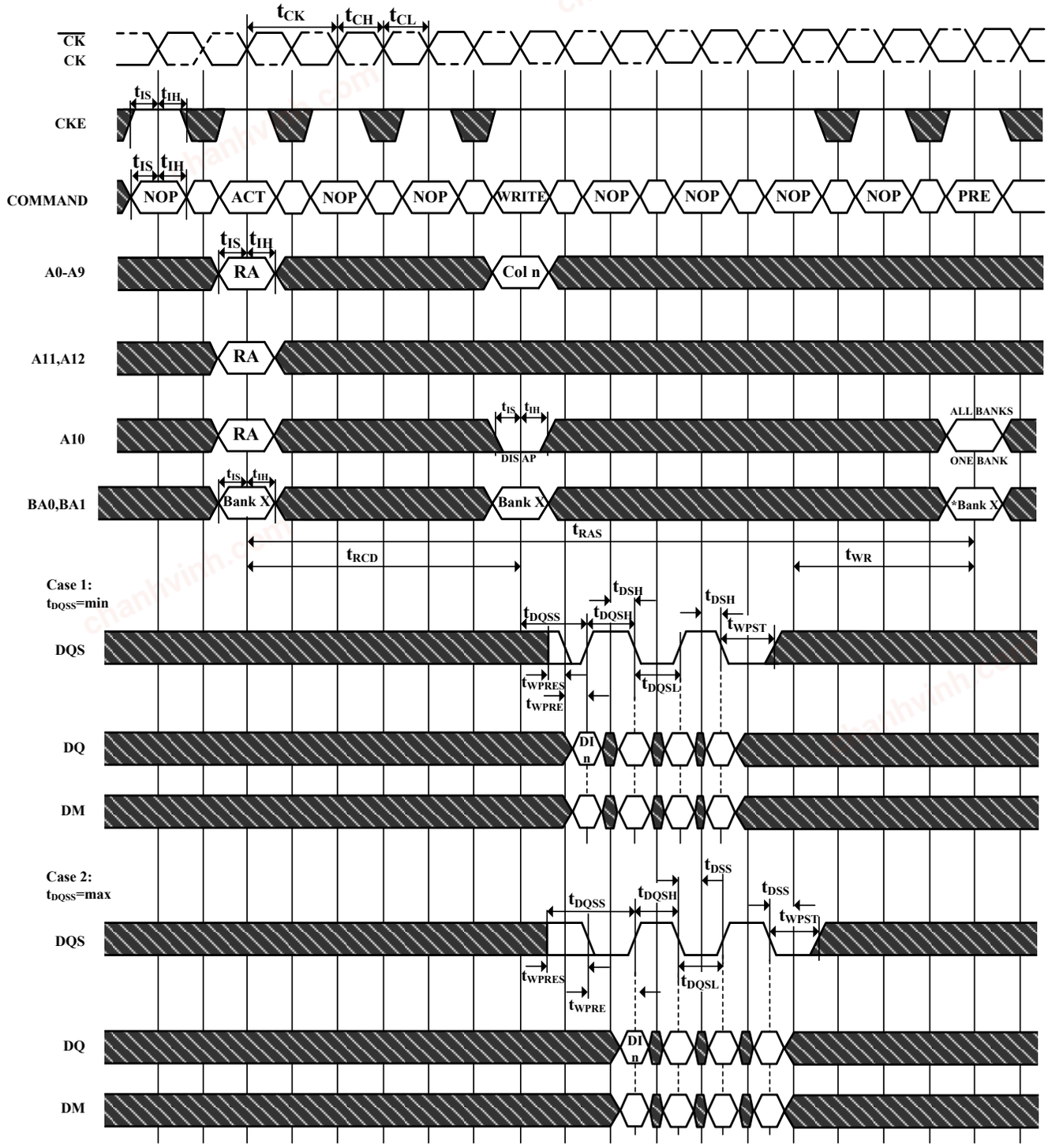

DI n = Data In from column n

Burst Length = 4 in the case shown

3 subsequent elements of Data Out are provided in the programmed order following DI n

DIS AP = Disable Autoprecharge

*=" Don't Care", if A10 is HIGH at this point

PRE = PRECHARGE, ACT = ACTIVE, RA = Row Address, BA = Bank Address

NOP commands are shown for ease of illustration; other commands may be valid at these times

Although tDQSS is drawn only for the first DQS rising edge, each rising edge of DQS must fall within the ± 25% window of the corresponding positive clock edge

Precharge may not be issued before tRAS ns after the ACTIVE command for applicable banks

Don't Care

chanhvinh.com

Figure 42. Write DM Operation

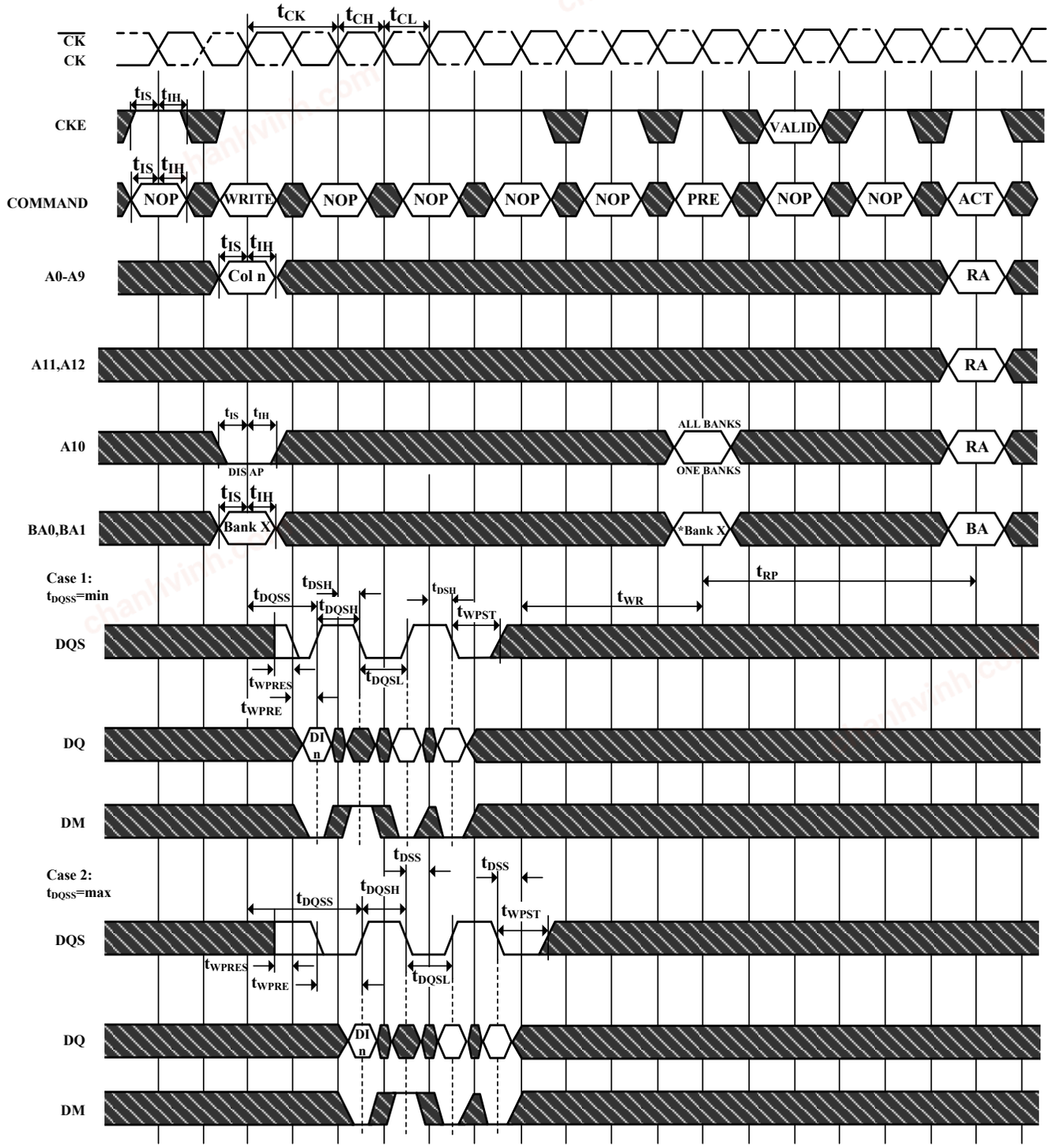

DI n = Data In from column n

Burst Length = 4 in the case shown

3 subsequent elements of Data In are provided in the programmed order following DI n

DIS AP = Disable Autoprecharge

*=" Don't Care" , if A10 is HIGH at this point

PRE = PRECHARGE, ACT = ACTIVE, RA = Row Address, BA = Bank Address

NOP commands are shown for ease of illustration; other commands may be valid at these times

Although tDQSS is drawn only for the first DQS rising edge, each rising edge of DQS must fall within the ± 25% window of the corresponding positive clock edge

Precharge may not be issued before tRAS ns after the ACTIVE command for applicable banks

Don't Care

chanhvinh.com

Figure 43. BGA 60ball package Outline Drawing Information

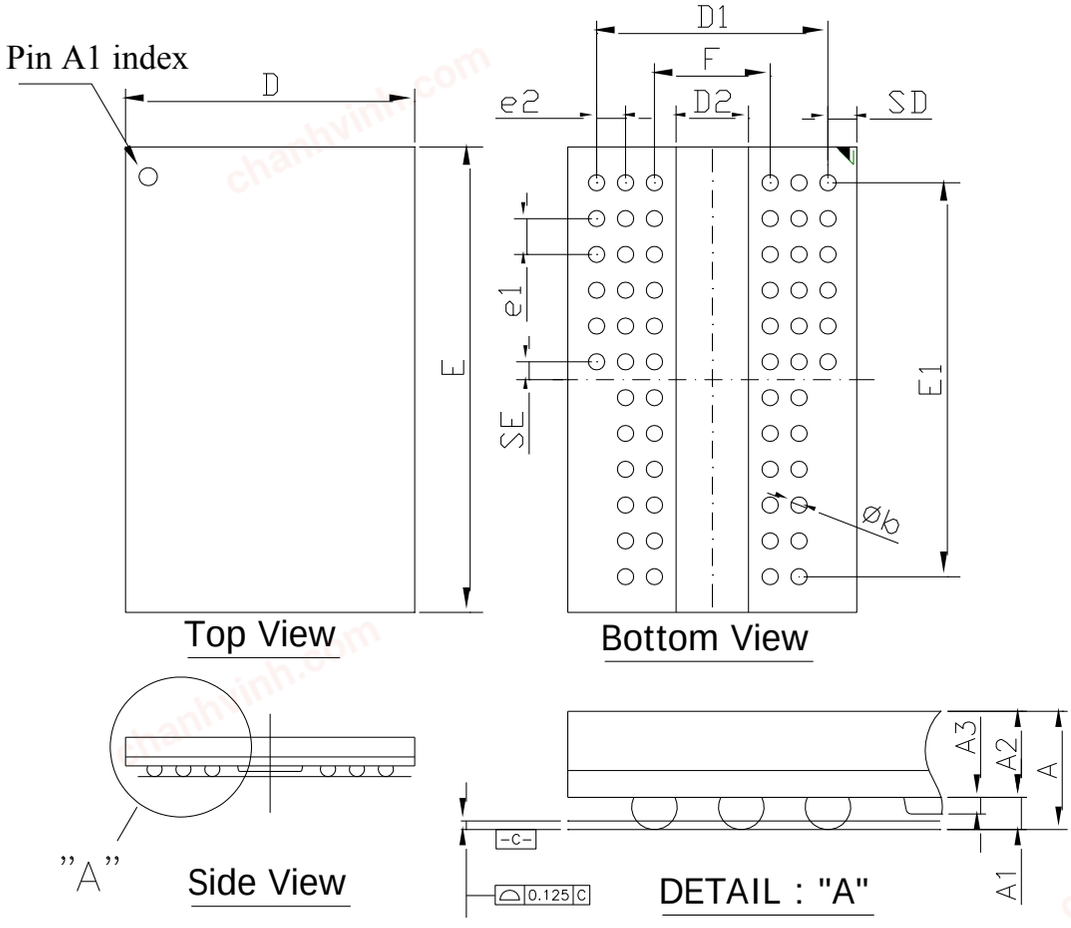

Symbol	Dimension (inch)			Dimension (mm)		
	Min	Nom	Max	Min	Nom	Max
A	--	--	0.047	--	--	1.20
A1	0.012	0.014	0.016	0.30	0.35	0.40
A2	--	--	0.031	--	--	0.8
A3	0.005	0.007	0.009	0.13	0.18	0.23
D	0.311	0.315	0.319	7.90	8.00	8.10
E	0.508	0.512	0.516	12.90	13.00	13.10
D1	--	0.252	--	--	6.40	--
E1	--	0.433	--	--	11.00	--
e1	--	0.039	--	--	1.00	--
e2	--	0.031	--	--	0.80	--
b	0.016	0.018	0.020	0.40	0.45	0.50
F	--	0.126	--	--	3.20	--
SD	--	0.031	--	--	0.80	--
SE	--	0.02	--	--	0.50	--
D2	--	--	0.081	--	--	2.05

chanhvinh.com

PART NUMBERING SYSTEM

AS4C	32M16D1	5	B	C/I	N	XX
DRAM	32M16=32Mx16 D1=DDR1	5=200MHz	B = FBGA	C=Commercial (0° C~+70° C) I=Industrial (-40° C~+85° C)	Indicates Pb and Halogen Free	Packing Type None:Tray TR:Reel

Alliance Memory, Inc.
511 Taylor Way,
San Carlos, CA 94070
Tel: 650-610-6800
Fax: 650-620-9211
www.alliancememory.com

Copyright © Alliance Memory
All Rights Reserved

© Copyright 2018 Alliance Memory, Inc. All rights reserved. Our three-point logo, our name and Intelliwatt are trademarks or registered trademarks of Alliance. All other brand and product names may be the trademarks of their respective companies. Alliance reserves the right to make changes to this document and its products at any time without notice. Alliance assumes no responsibility for any errors that may appear in this document. The data contained herein represents Alliance's best data and/or estimates at the time of issuance. Alliance reserves the right to change or correct this data at any time, without notice. If the product described herein is under development, significant changes to these specifications are possible. The information in this product data sheet is intended to be general descriptive information for potential customers and users, and is not intended to operate as, or provide, any guarantee or warrantee to any user or customer. Alliance does not assume any responsibility or liability arising out of the application or use of any product described herein, and disclaims any express or implied warranties related to the sale and/or use of Alliance products including liability or warranties related to fitness for a particular purpose, merchantability, or infringement of any intellectual property rights, except as express agreed to in Alliance's Terms and Conditions of Sale (which are available from Alliance). All sales of Alliance products are made exclusively according to Alliance's Terms and Conditions of Sale. The purchase of products from Alliance does not convey a license under any patent rights, copyrights; mask works rights, trademarks, or any other intellectual property rights of Alliance or third parties. Alliance does not authorize its products for use as critical components in life-supporting systems where a malfunction or failure may reasonably be expected to result in significant injury to the user, and the inclusion of Alliance products in such life-supporting systems implies that the manufacturer assumes all risk of such use and agrees to indemnify Alliance against all claims arising from such use.