chanhvinh.com



## Revision History

## 1Gb DDR3L AS4C128M8D3LB 78ball FBGA PACKAGE

| Revision | Details | Date |
|---|---|---|
| Rev 1.0 | Preliminary datasheet | Jan. 2018 |

chanhvinh.com



# 128M x 8 bit DDR3L Synchronous DRAM (SDRAM)

**Advance (Rev. 1.0, Jan /2018)**

## Features

- JEDEC Standard Compliant
- Power supplies: $V_{DD}$ & $V_{DDQ}$ = +1.35V
- Backward compatible to $V_{DD}$ & $V_{DDQ}$ = +1.5V ±0.075V
- Operating temperature range:
  - Commercial : $T_C$ = 0~95°C
  - Industrial : $T_C$ = -40~95°C
- Supports JEDEC clock jitter specification
- Fully synchronous operation
- Fast clock rate: 800MHz
- Differential Clock, CK & CK#
- Bidirectional differential data strobe
  - DQS & DQS#
- 8 internal banks for concurrent operation
- 8n-bit prefetch architecture
- Pipelined internal architecture
- Precharge & active power down
- Programmable Mode & Extended Mode registers
- Additive Latency (AL): 0, CL-1, CL-2
- Programmable Burst lengths: 4, 8
- Burst type: Sequential / Interleave
- Output Driver Impedance Control
- Average refresh period
  - 8192 cycles/64ms (7.8us at -40°C ≦ $T_C$ ≦ +85°C)
  - 8192 cycles/32ms (3.9us at +85°C ≦ $T_C$ ≦ +95°C)
- Write Leveling
- ZQ Calibration
- Dynamic ODT (Rtt_Nom & Rtt_WR)
- RoHS compliant
- Auto Refresh and Self Refresh
- 78-ball 8 x 10.5 x 1.0mm FBGA package
  - Pb and Halogen Free

## Overview

The 1Gb Double-Data-Rate-3 (DDR3L) DRAMs is double data rate architecture to achieve high-speed operation. It is internally configured as an eight bank DRAM.

The 1Gb chip is organized as 16Mbit x 8 I/Os x 8 bank devices. These synchronous devices achieve high speed double-data-rate transfer rates of up to 1600 Mb/sec/pin for general applications.

The chip is designed to comply with all key DDR3L DRAM key features and all of the control and address inputs are synchronized with a pair of externally supplied differential clocks. Inputs are latched at the cross point of differential clocks (CK rising and CK# falling). All I/Os are synchronized with differential DQS pair in a source synchronous fashion.

These devices operate with a single +1.35V -0.067V / +0.1V power supply and are available in BGA packages.

### Table 1. Ordering Information

| Product part No | Org | Temperature | Max Clock (MHz) | Package |
|---|---|---|---|---|
| AS4C128M8D3LB-12BCN | 128M x 8 | Commercial 0°C to 95°C | 800 | 78-ball FBGA |
| AS4C128M8D3LB-12BIN | 128M x 8 | Industrial -40°C to 95°C | 800 | 78-ball FBGA |

### Table 2. Speed Grade Information

| Speed Grade | Clock Frequency | CAS Latency | $t_{RCD}$ (ns) | $t_{RP}$ (ns) |
|---|---|---|---|---|
| DDR3L-1600 | 800 MHz | 11 | 13.75 | 13.75 |

chanhvinh.com



**Figure 1. Ball Assignment (FBGA Top View)**

| | 1 | 2 | 3 | … | 7 | 8 | 9 |
|---|---|---|---|---|---|---|---|
| A | VSS | VDD | NC | | TDQS# | VSS | VDD |
| B | VSS | VSSQ | DQ0 | | DM/ TDQS | VSSQ | VDDQ |
| C | VDDQ | DQ2 | DQS | | DQ1 | DQ3 | VSSQ |
| D | VSSQ | DQ6 | DQS# | | VDD | VSS | VSSQ |
| E | VREFDQ | VDDQ | DQ4 | | DQ7 | DQ5 | VDDQ |
| F | NC | VSS | RAS# | | CK | VSS | NC |
| G | ODT | VDD | CAS# | | CK# | VDD | CKE |
| H | NC | CS# | WE# | | A10/AP | ZQ | NC |
| J | VSS | BA0 | BA2 | | NC | VREFCA | VSS |
| K | VDD | A3 | A0 | | A12/BC# | BA1 | VDD |
| L | VSS | A5 | A2 | | A1 | A4 | VSS |
| M | VDD | A7 | A9 | | A11 | A6 | VDD |
| N | VSS | RESET# | A13 | | NC | A8 | VSS |

chanhvinh.com



**Figure 2. Block Diagram**

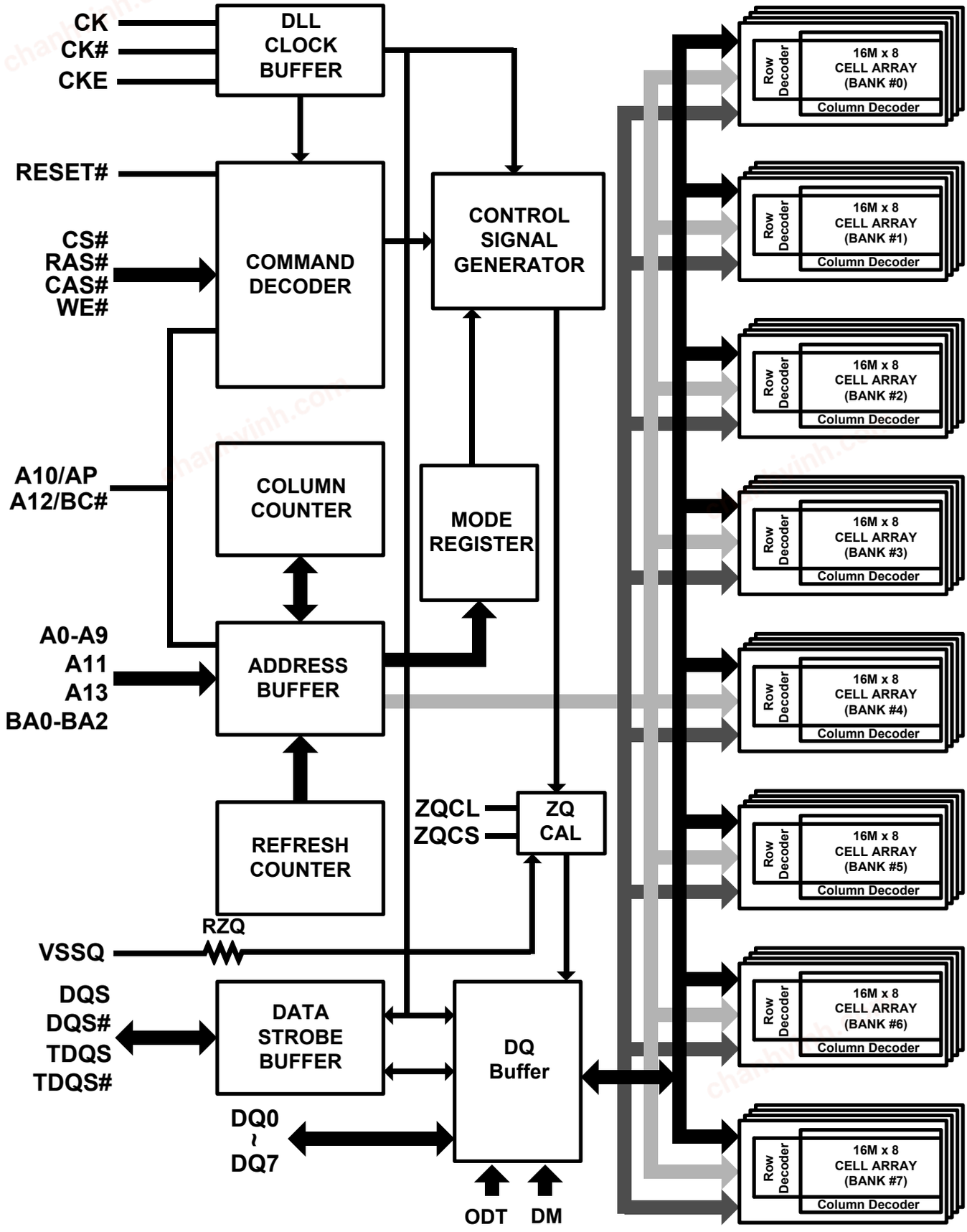

chanhvinh.com



## Figure 3. State Diagram

This simplified State Diagram is intended to provide an overview of the possible state transitions and the commands to control them. In particular, situations involving more than one bank, the enabling or disabling of on-die termination, and some other events are not captured in full detail

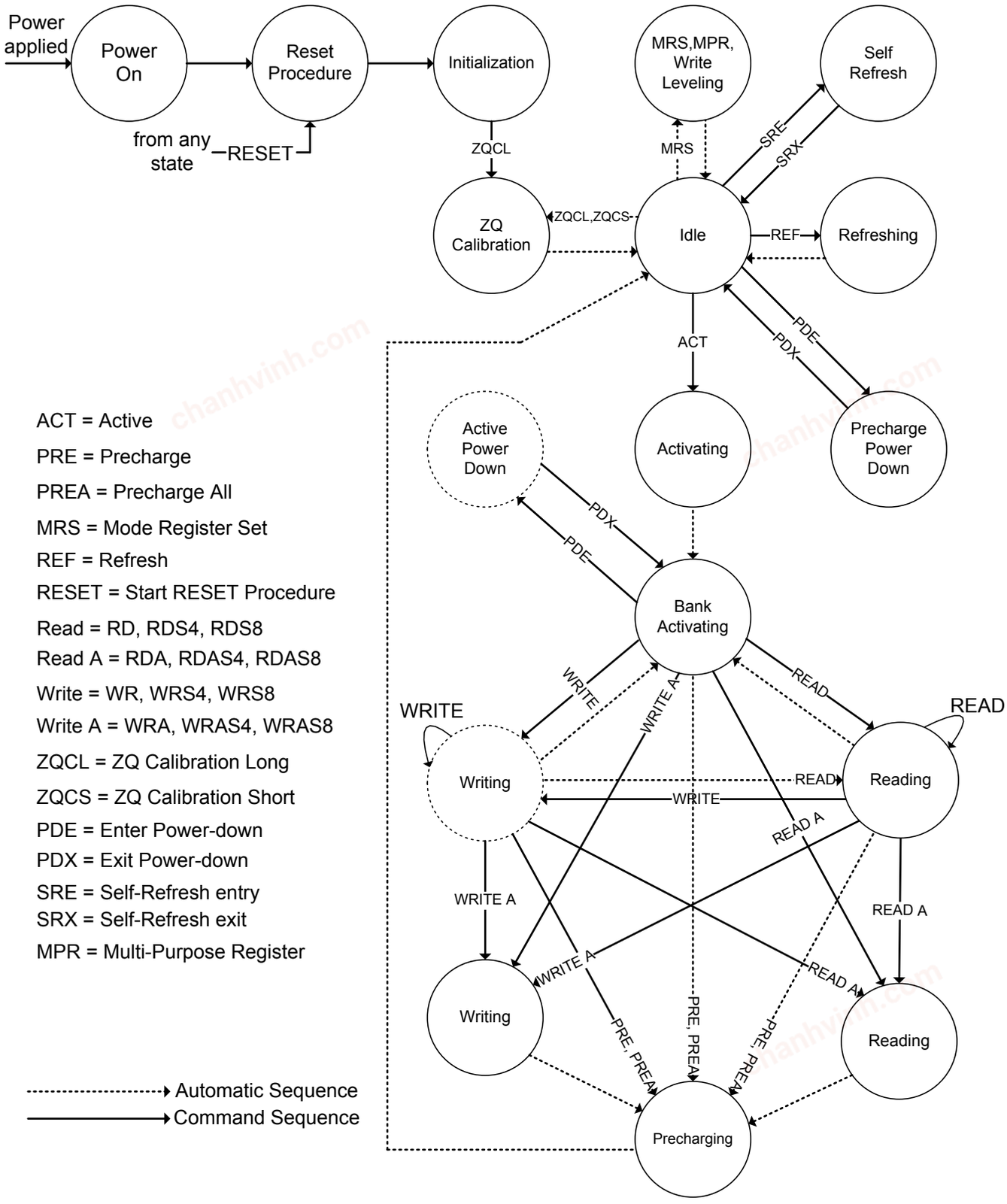

chanhvinh.com



## Ball Descriptions

### Table 3. Ball Details

| Symbol | Type | Description |
|---|---|---|
| CK, CK# | Input | **Differential Clock:** CK and CK# are driven by the system clock. All SDRAM input signals are sampled on the crossing of positive edge of CK and negative edge of CK#. Output (Read) data is referenced to the crossings of CK and CK# (both directions of crossing). |
| CKE | Input | **Clock Enable:** CKE activates (HIGH) and deactivates (LOW) the CK signal. If CKE goes LOW synchronously with clock, the internal clock is suspended from the next clock cycle and the state of output and burst address is frozen as long as the CKE remains LOW. When all banks are in the idle state, deactivating the clock controls the entry to the Power Down and Self Refresh modes. |
| BA0-BA2 | Input | **Bank Address:** BA0-BA2 define to which bank the BankActivate, Read, Write, or Bank Precharge command is being applied. |
| A0-A13 | Input | **Address Inputs:** A0-A13 is sampled during row address (A0-A13) for Active commands and the column address (A0-A9) for Read/Write commands to select one location out of the memory array in the respective bank. (A10/AP and A12/BC# have additional functions). The address inputs also provide the op-code during Mode Register Set commands. |
| A10/AP | Input | **Auto-Precharge:** A10 is sampled during Read/Write commands to determine whether Autoprecharge should be performed to the accessed bank after the Read/Write operation. (HIGH: Autoprecharge; LOW: no Autoprecharge). A10 is sampled during a Precharge command to determine whether the Precharge applies to one bank (A10 LOW) or all banks (A10 HIGH). |
| A12/BC# | Input | **Burst Chop:** A12/BC# is sampled during Read and Write commands to determine if burst chop (on the fly) will be performed. (HIGH - no burst chop; LOW - burst chopped). |
| CS# | Input | **Chip Select:** CS# enables (sampled LOW) and disables (sampled HIGH) the command decoder. All commands are masked when CS# is sampled HIGH. It is considered part of the command code. |
| RAS# | Input | **Row Address Strobe:** The RAS# signal defines the operation commands in conjunction with the CAS# and WE# signals and is latched at the crossing of positive edges of CK and negative edge of CK#. When RAS# and CS# are asserted "LOW" and CAS# is asserted "HIGH" either the BankActivate command or the Precharge command is selected by the WE# signal. When the WE# is asserted "HIGH" the BankActivate command is selected and the bank designated by BA is turned on to the active state. When the WE# is asserted "LOW" the Precharge command is selected and the bank designated by BA is switched to the idle state after the precharge operation. |
| CAS# | Input | **Column Address Strobe:** The CAS# signal defines the operation commands in conjunction with the RAS# and WE# signals and is latched at the crossing of positive edges of CK and negative edge of CK#. When RAS# is held "HIGH" and CS# is asserted "LOW" the column access is started by asserting CAS# "LOW". Then, the Read or Write command is selected by asserting WE# “HIGH" or “LOW". |
| WE# | Input | **Write Enable:** The WE# signal defines the operation commands in conjunction with the RAS# and CAS# signals and is latched at the crossing of positive edges of CK and negative edge of CK#. The WE# input is used to select the BankActivate or Precharge command and Read or Write command. |
| DQS, DQS# | Input / Output | **Bidirectional Data Strobe:** Specifies timing for Input and Output data. Read Data Strobe is edge triggered. Write Data Strobe provides a setup and hold time for data and DM. The data strobes DOS is paired with DQS# to provide differential pair signaling to the system during both reads and writes. |
| TDQS TDQS# | Output | **Termination Data Strobe:** When TDQS is enabled, DM is disabled, and the TDQS and TDQS# balls provide termination resistance. |

chanhvinh.com



| | | |
|---|---|---|
| DM | Input | **Data Input Mask:** Input data is masked when DM is sampled HIGH during a write cycle. DM has an optional use as TDQS on the x8. |
| DQ0-DQ7 | Input / Output | **Data I/O:** The DQ0-DQ7 input and output data are synchronized with positive and negative edges of DQS and DQS#. TheI/Os are byte-maskable during Writes. |
| ODT | Input | **On Die Termination:** ODT (registered HIGH) enables termination resistance internal to the DDR3L SDRAM. When enabled, ODT is applied to each DQ, DQS, DQS#, DM/TDQS and TDQS# signal. (When TDQS is enabled via Mode Register A11=1 in MR1) The ODT pin will be ignored if Mode-registers, MR1and MR2, are programmed to disable RTT. |
| RESET# | Input | **Active Low Asynchronous Reset:** Reset is active when RESET# is LOW, and inactive when RESET# is HIGH. RESET# must be HIGH during normal operation. RESET# is a CMOS rail to rail signal with DC high and low at 80% and 20% of VDD. |
| $V_{DD}$ | Supply | **Power Supply:** +1.35V -0.067V/+0.1V. |
| $V_{SS}$ | Supply | **Ground** |
| $V_{DDQ}$ | Supply | **DQ Power:** +1.35V -0.067V/+0.1V. |
| $V_{SSQ}$ | Supply | **DQ Ground** |
| $V_{REFCA}$ | Supply | **Reference voltage for CA** |
| $V_{REFDQ}$ | Supply | **Reference voltage for DQ** |
| ZQ | Supply | **Reference pin for ZQ calibration.** |
| NC | - | **No Connect:** These pins should be left unconnected. |

chanhvinh.com



## Operation Mode Truth Table

The following tables provide a quick reference of available DDR3L SDRAM commands, including CKE power-down modes and bank-to-bank commands.

**Table 4. Truth Table (Note (1), (2))**

| Command | State | $CKE_{n-1}$[3] | $CKE_n$ | DM | BA0-2 | A10/AP | A0-9, 11, 13 | A12/BC# | CS# | RAS# | CAS# | WE# |
|---|---|---|---|---|---|---|---|---|---|---|---|---|
| BankActivate | Idle[4] | H | H | X | V | Row address | | | L | L | H | H |
| Single Bank Precharge | Any | H | H | X | V | L | V | V | L | L | H | L |
| All Banks Precharge | Any | H | H | X | V | H | V | V | L | L | H | L |
| Write (Fixed BL8 or BC4) | Active[4] | H | H | X | V | L | V | V | L | H | L | L |
| Write (BC4, on the fly) | Active[4] | H | H | X | V | L | V | L | L | H | L | L |
| Write (BL8, on the fly) | Active[4] | H | H | X | V | L | V | H | L | H | L | L |
| Write with Autoprecharge (Fixed BL8 or BC4) | Active[4] | H | H | X | V | H | V | V | L | H | L | L |
| Write with Autoprecharge (BC4, on the fly) | Active[4] | H | H | X | V | H | V | L | L | H | L | L |
| Write with Autoprecharge (BL8, on the fly) | Active[4] | H | H | X | V | H | V | H | L | H | L | L |
| Read (Fixed BL8 or BC4) | Active[4] | H | H | X | V | L | V | V | L | H | L | H |
| Read (BC4, on the fly) | Active[4] | H | H | X | V | L | V | L | L | H | L | H |
| Read (BL8, on the fly) | Active[4] | H | H | X | V | L | V | H | L | H | L | H |
| Read with Autoprecharge (Fixed BL8 or BC4) | Active[4] | H | H | X | V | H | V | V | L | H | L | H |
| Read with Autoprecharge (BC4, on the fly) | Active[4] | H | H | X | V | H | V | L | L | H | L | H |
| Read with Autoprecharge (BL8, on the fly) | Active[4] | H | H | X | V | H | V | H | L | H | L | H |
| (Extended) Mode Register Set | Idle | H | H | X | V | OP code | | | L | L | L | L |
| No-Operation | Any | H | H | X | V | V | V | V | L | H | H | H |
| Device Deselect | Any | H | H | X | X | X | X | X | H | X | X | X |
| Refresh | Idle | H | H | X | V | V | V | V | L | L | L | H |
| SelfRefresh Entry | Idle | H | L | X | V | V | V | V | L | L | L | H |
| SelfRefresh Exit | Idle | L | H | X | X | X | X | X | H | X | X | X |
| | | | | | V | V | V | V | L | H | H | H |
| Power Down Mode Entry | Idle | H | L | X | X | X | X | X | H | X | X | X |
| | | | | | V | V | V | V | L | H | H | H |
| Power Down Mode Exit | Any | L | H | X | X | X | X | X | H | X | X | X |
| | | | | | V | V | V | V | L | H | H | H |
| Data Input Mask Disable | Active | H | X | L | X | X | X | X | X | X | X | X |
| Data Input Mask Enable[5] | Active | H | X | H | X | X | X | X | X | X | X | X |
| ZQ Calibration Long | Idle | H | H | X | X | H | X | X | L | H | H | L |
| ZQ Calibration Short | Idle | H | H | X | X | L | X | X | L | H | H | L |

**NOTE 1:** V=Valid data, X=Don't Care, L=Low level, H=High level
**NOTE 2:** CKEn signal is input level when commands are provided.
**NOTE 3:** CKEn-1 signal is input level one clock cycle before the commands are provided.
**NOTE 4:** These are states of bank designated by BA signal.
**NOTE 5:** DM can be enabled respectively.

chanhvinh.com



## Functional Description

The DDR3L SDRAM is a high-speed dynamic random access memory internally configured as an eight-bank DRAM. The DDR3L SDRAM uses an 8n prefetch architecture to achieve high speed operation. The 8n Prefetch architecture is combined with an interface designed to transfer two data words per clock cycle at the I/O pins. A single read or write operation for the DDR3L SDRAM consists of a single 8n-bit wide, four clock data transfer at the internal DRAM core and two corresponding n-bit wide, one-half clock cycle data transfers at the I/O pins.

Read and write operation to the DDR3L SDRAM are burst oriented, start at a selected location, and continue for a burst length of eight or a 'chopped' burst of four in a programmed sequence. Operation begins with the registration of an Active command, which is then followed by a Read or Write command. The address bits registered coincident with the Active command are used to select the bank and row to be activated (BA0-BA2 select the bank; A0-A13 select the row). The address bit registered coincident with the Read or Write command are used to select the starting column location for the burst operation, determine if the auto precharge command is to be issued (via A10), and select BC4 or BL8 mode 'on the fly' (via A12) if enabled in the mode register.

Prior to normal operation, the DDR3L SDRAM must be powered up and initialized in a predefined manner. The following sections provide detailed information covering device reset and initialization, register definition, command descriptions and device operation.

### Figure 4. Reset and Initialization Sequence at Power-on Ramping

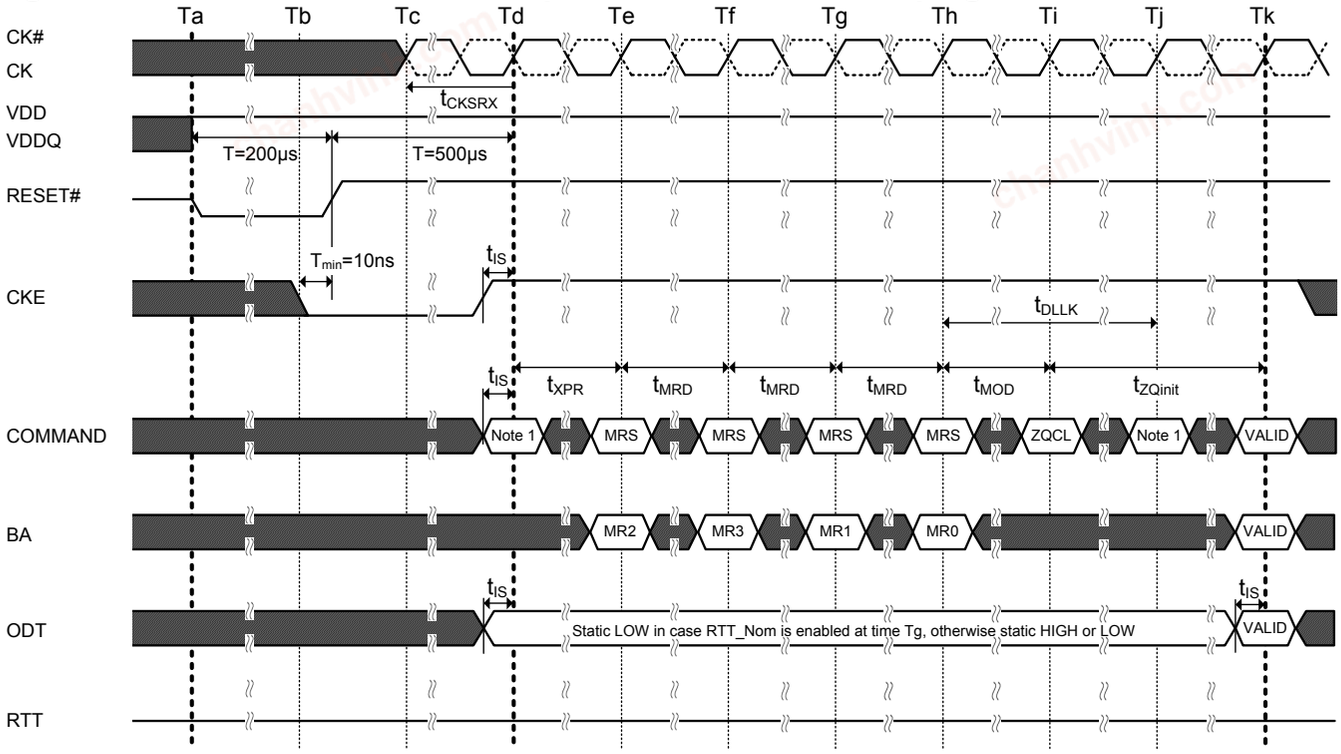


**NOTE 1. From time point "Td" until "Tk " NOP or DES commands must be applied between MRS and ZQCL commands.**

TIME BREAK Don't Care

chanhvinh.com



## Power-up and Initialization

The Following sequence is required for POWER UP and Initialization

1. Apply power (RESET# is recommended to be maintained below 0.2 x VDD, all other inputs may be undefined). RESET# needs to be maintained for minimum 200us with stable power. CKE is pulled “Low” anytime before RESET# being de-asserted (min. time 10ns). The power voltage ramp time between 300mV to VDDmin must be no greater than 200ms; and during the ramp, VDD>VDDQ and (VDD-VDDQ) <0.3 Volts.
   - VDD and VDDQ are driven from a single power converter output, AND
   - The voltage levels on all pins other than VDD, VDDQ, VSS, VSSQ must be less than or equal to VDDQ and VDD on one side and must be larger than or equal to VSSQ and VSS on the other side. In addition, VTT is limited to 0.95V max once power ramp is finished, AND
   - Vref tracks VDDQ/2.

   OR
   - Apply VDD without any slope reversal before or at the same time as VDDQ.
   - Apply VDDQ without any slope reversal before or at the same time as VTT & Vref.
   - The voltage levels on all pins other than VDD, VDDQ, VSS, VSSQ must be less than or equal to VDDQ and VDD on one side and must be larger than or equal to VSSQ and VSS on the other side.
2. After RESET# is de-asserted, wait for another 500us until CKE become active. During this time, the DRAM will start internal state initialization; this will be done independently of external clocks.
3. Clock (CK, CK#) need to be started and stabilized for at least 10ns or 5tCK (which is larger) before CKE goes active. Since CKE is a synchronous signal, the corresponding set up time to clock (tIS) must be meeting. Also a NOP or Deselect command must be registered (with tIS set up time to clock) before CKE goes active. Once the CKE registered “High” after Reset, CKE needs to be continuously registered “High” until the initialization sequence is finished, including expiration of tDLLK and tZQinit.
4. The DDR3L DRAM will keep its on-die termination in high impedance state as long as RESET# is asserted. Further, the DRAM keeps its on-die termination in high impedance state after RESET# deassertion until CKE is registered HIGH. The ODT input signal may be in undefined state until tIS before CKE is registered HIGH. When CKE is registered HIGH, the ODT input signal may be statically held at either LOW or HIGH. If RTT_NOM is to be enabled in MR1, the ODT input signal must be statically held LOW. In all cases, the ODT input signal remains static until the power up initialization sequence is finished, including the expiration of tDLLK and tZQinit.
5. After CKE being registered high, wait minimum of Reset CKE Exit time, tXPR, before issuing the first MRS command to load mode register.(tXPR=max (tXS, 5tCK))
6. Issue MRS command to load MR2 with all application settings. (To issue MRS command for MR2, provide “Low” to BA0 and BA2, “High” to BA1)
7. Issue MRS Command to load MR3 with all application settings. (To issue MRS command for MR3, provide “Low” to BA2, “High” to BA0 and BA1)
8. Issue MRS Command to load MR1 with all application settings and DLL enabled. (To issue “DLL Enable” command, provide “Low” to A0, “High” to BA0 and “Low” to BA1 and BA2)
9. Issue MRS Command to load MR0 with all application settings and “DLL reset”. (To issue DLL reset command provide “High” to A8 and “Low” to BA0-BA2)
10. Issue ZQCL command to starting ZQ calibration.
11. Wait for both tDLLK and tZQinit completed.
12. The DDR3L SDRAM is now ready for normal operation.

chanhvinh.com



## Reset Procedure at Stable Power

The following sequence is required for RESET at no power interruption initialization.

1. Asserted RESET below 0.2*VDD anytime when reset is needed (all other inputs may be undefined). RESET needs to be maintained for minimum 100ns. CKE is pulled “Low” before RESET being de-asserted (min. time 10ns).
2. Follow Power-up Initialization Sequence step 2 to 11.
3. The Reset sequence is now completed. DDR3L SDRAM is ready for normal operation.

## Figure 5. Reset Procedure at Power Stable Condition

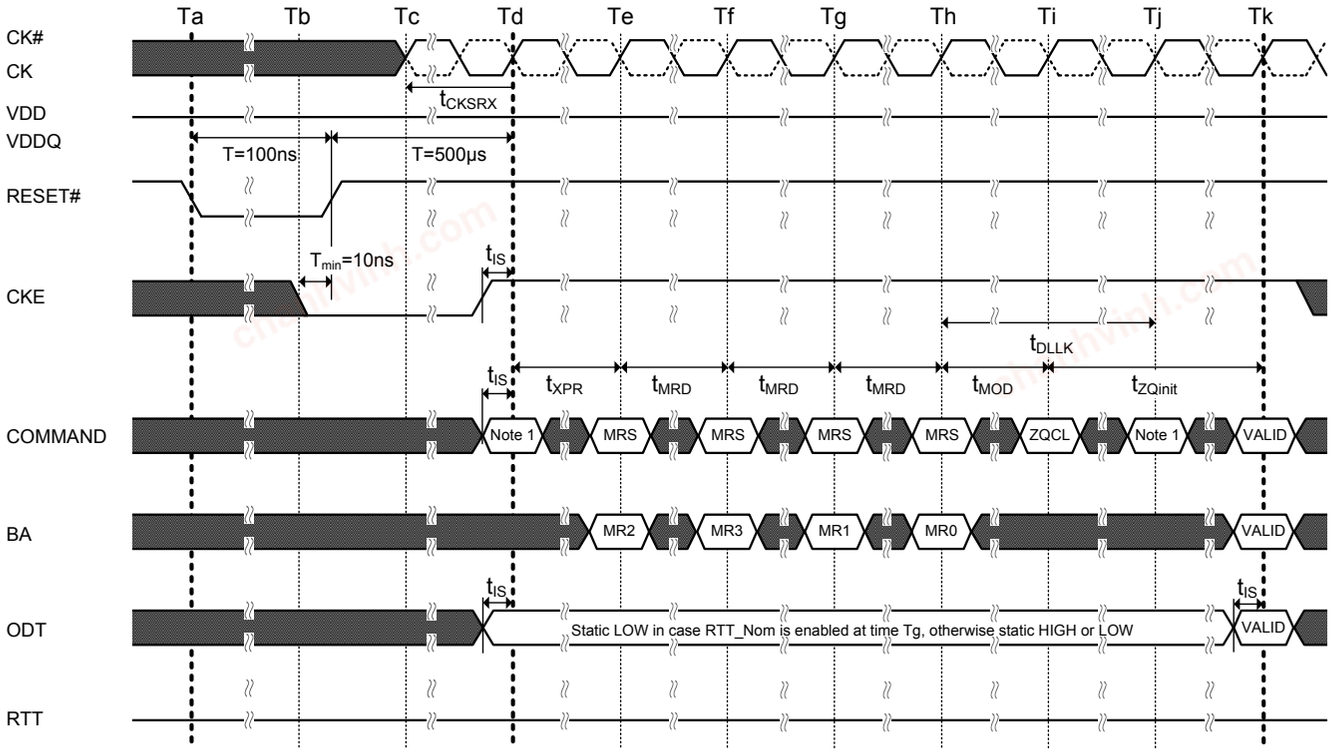


**NOTE 1. From time point "Td" until "Tk" NOP or DES commands must be applied between MRS and ZQCL commands.**

TIME BREAK Don't Care

chanhvinh.com



## Register Definition

## Programming the Mode Registers

For application flexibility, various functions, features, and modes are programmable in four Mode Registers, provided by the DDR3L SDRAM, as user defined variables and they must be programmed via a Mode Register Set (MRS) command. As the default values of the Mode Registers are not defined, contents of Mode Registers must be fully initialized and/or re-initialized, i.e., written, after power up and/or reset for proper operation. Also the contents of the Mode Registers can be altered by re-executing the MRS command during normal operation. When programming the mode registers, even if the user chooses to modify only a sub-set of the MRS fields, all address fields within the accessed mode register must be redefined when the MRS command is issued. MRS command and DLL Reset do not affect array contents, which mean these commands can be executed any time after power-up without affecting the array contents.

The mode register set command cycle time, tMRD is required to complete the write operation to the mode register and is the minimum time required between two MRS commands shown in Figure of tMRD timing.

### Figure 6. tMRD timing

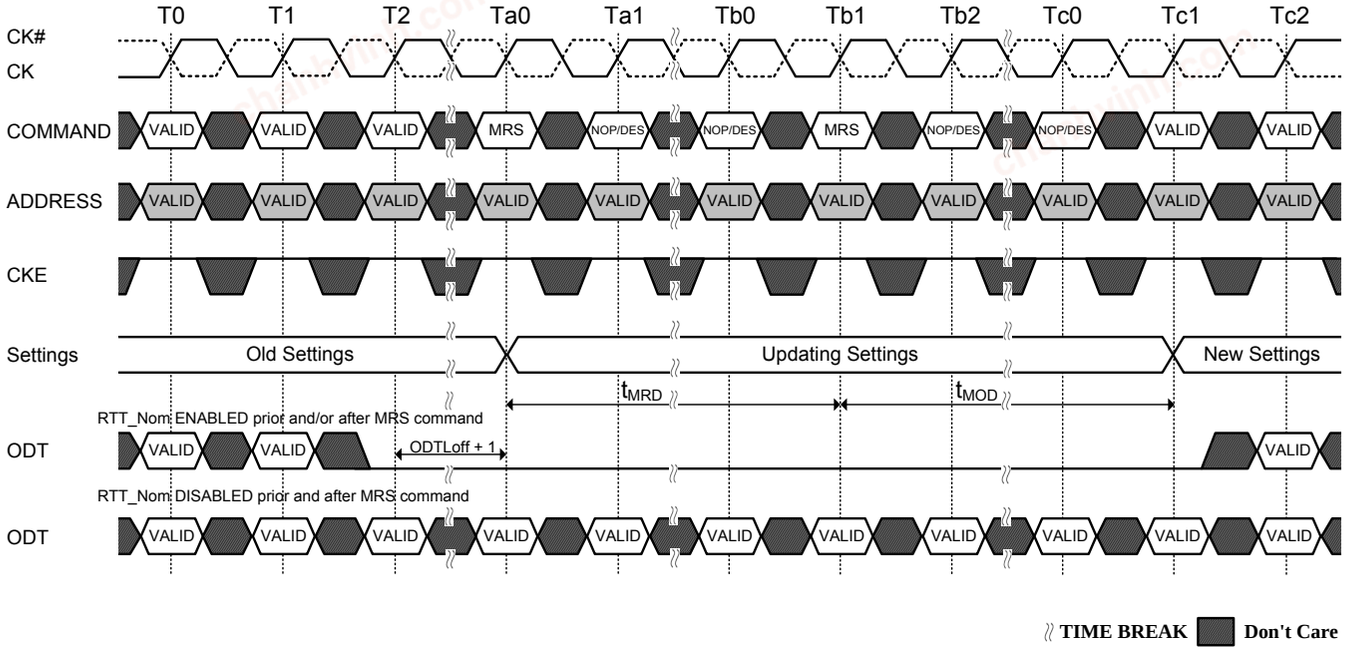

chanhvinh.com



The MRS command to Non-MRS command delay, tMOD, is require for the DRAM to update the features except DLL reset, and is the minimum time required from an MRS command to a non-MRS command excluding NOP and DES shown in Figure of tMOD timing.

## Figure 7. tMOD timing

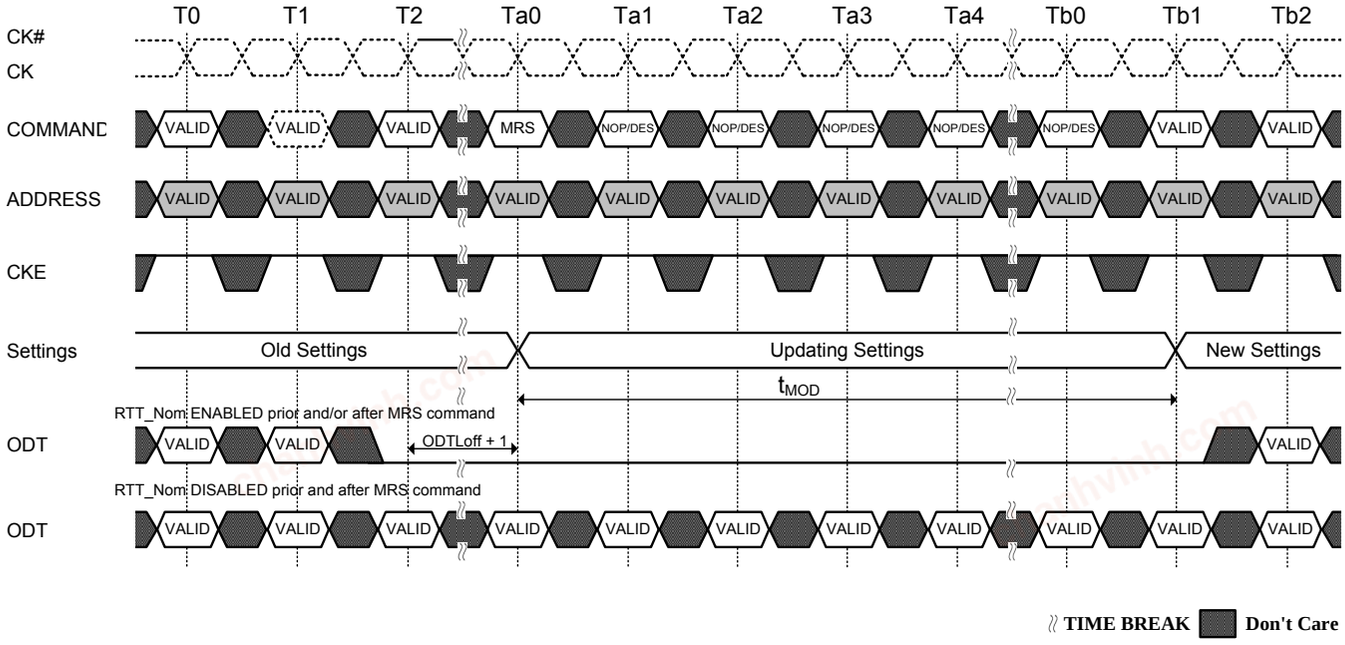


The mode register contents can be changed using the same command and timing requirements during normal operation as long as the DRAM is in idle state, i.e., all banks are in the precharged state with tRP satisfied, all data bursts are completed and CKE is high prior to writing into the mode register. The mode registers are divided into various fields depending on the functionality and/or modes.

chanhvinh.com



## Mode Register MR0

The mode-register MR0 stores data for controlling various operating modes of DDR3L SDRAM. It controls burst length, read burst type, CAS latency, test mode, DLL reset, WR, and DLL control for precharge Power-Down, which include various vendor specific options to make DDR3L DRAM useful for various applications. The mode register is written by asserting low on CS#, RAS#, CAS#, WE#, BA0, BA1, and BA2, while controlling the states of address pins according to the following figure.

### Table 5. Mode Register Bitmap

| BA2 | BA1 | BA0 | A13 | A12 | A11 | A10 | A9 | A8 | A7 | A6 | A5 | A4 | A3 | A2 | A1 | A0 | |
|---|---|---|---|---|---|---|---|---|---|---|---|---|---|---|---|---|---|
| 0[*1] | 0 | 0 | 0[*1] | PPD | WR | | | DLL | TM | CAS Latency | | | RBT | CL | BL | | Mode Register (0) |
| | | | | | | | | | | | | | | | | | Address Field |

| BA1 | BA0 | MRS mode |
|---|---|---|
| 0 | 0 | MR0 |
| 0 | 1 | MR1 |
| 1 | 0 | MR2 |
| 1 | 1 | MR3 |

| A7 | Mode |
|---|---|
| 0 | Normal |
| 1 | Test |

| A3 | Read Burst Type |
|---|---|
| 0 | Nibble Sequential |
| 1 | Interleave |

| A1 | A0 | BL |
|---|---|---|
| 0 | 0 | 8 (Fixed) |
| 0 | 1 | BC4 or 8 (on the fly) |
| 1 | 0 | BC4 (Fixed) |
| 1 | 1 | Reserved |

| A11 | A10 | A9 | WR (cycles) |
|---|---|---|---|
| 0 | 0 | 0 | 16[*2] |
| 0 | 0 | 1 | 5[*2] |
| 0 | 1 | 0 | 6[*2] |
| 0 | 1 | 1 | 7[*2] |
| 1 | 0 | 0 | 8[*2] |
| 1 | 0 | 1 | 10[*2] |
| 1 | 1 | 0 | 12[*2] |
| 1 | 1 | 1 | 14[*2] |

| A6 | A5 | A4 | A2 | CAS Latency |
|---|---|---|---|---|
| 0 | 0 | 0 | 0 | Reserved |
| 0 | 0 | 1 | 0 | 5 |
| 0 | 1 | 0 | 0 | 6 |
| 0 | 1 | 1 | 0 | 7 |
| 1 | 0 | 0 | 0 | 8 |
| 1 | 0 | 1 | 0 | 9 |
| 1 | 1 | 0 | 0 | 10 |
| 1 | 1 | 1 | 0 | 11 |
| 0 | 0 | 0 | 1 | Reserved |
| 0 | 0 | 1 | 1 | Reserved |
| 0 | 1 | 0 | 1 | Reserved |
| 0 | 1 | 1 | 1 | Reserved |
| 1 | 0 | 0 | 1 | Reserved |
| 1 | 0 | 1 | 1 | Reserved |
| 1 | 1 | 0 | 1 | Reserved |
| 1 | 1 | 1 | 1 | Reserved |

| A12 | DLL Control for Precharge PD |
|---|---|
| 0 | Slow exit (DLL off) |
| 1 | Fast exit (DLL on) |

| A8 | DLL Reset |
|---|---|
| 0 | No |
| 1 | Yes |

Note 1. Reserved for future use and must be set to 0 when programming the MR.
Note 2. WR (write recovery for autoprecharge) min in clock cycles is calculated by dividing tWR (ns) by tCK (ns) and rounding up to the next integer WRmin [cycles] =Roundup (tWR / tCK). The value in the mode register must be programmed to be equal or larger than WRmin. The programmed WR value is used with tRP to determine tDAL.

### - CAS Latency

The CAS Latency is defined by MR0 (bit A2, A4~A6) as shown in the MR0 Definition figure. CAS Latency is the delay, in clock cycles, between the internal Read command and the availability of the first bit of output data. DDR3L SDRAM does not support any half clock latencies. The overall Read Latency (RL) is defined as Additive Latency (AL) + CAS Latency (CL); RL = AL + CL.

### - Test Mode

The normal operating mode is selected by MR0 (bit7=0) and all other bits set to the desired values shown in the MR0 definition figure. Programming bit A7 to a '1' places the DDR3L SDRAM into a test mode that is only used by the DRAM manufacturer and should not be used. No operations or functionality is guaranteed if A7=1.

chanhvinh.com



## - Burst Length, Type, and Order

Accesses within a given burst may be programmed to sequential or interleaved order. The burst type is selected via bit A3 as shown in the MR0 Definition as above figure. The ordering of access within a burst is determined by the burst length, burst type, and the starting column address. The burst length is defined by bits A0-A1. Burst lengths options include fix BC4, fixed BL8, and on the fly which allow BC4 or BL8 to be selected coincident with the registration of a Read or Write command via A12/BC#

### Table 6. Burst Type and Burst Order

| Burst Length | Read Write | Starting Column Address | | | Sequential A3=0 | Interleave A3=1 | Note |
|---|---|---|---|---|---|---|---|
| | | A2 | A1 | A0 | | | |
| 4 Chop | Read | 0 | 0 | 0 | 0, 1, 2, 3, T, T, T, T | 0, 1, 2, 3, T, T, T, T | 1, 2, 3 |
| | | 0 | 0 | 1 | 1, 2, 3, 0, T, T, T, T | 1, 0, 3, 2, T, T, T, T | |
| | | 0 | 1 | 0 | 2, 3, 0, 1, T, T, T, T | 2, 3, 0, 1, T, T, T, T | |
| | | 0 | 1 | 1 | 3, 0, 1, 2, T, T, T, T | 3, 2, 1, 0, T, T, T, T | |
| | | 1 | 0 | 0 | 4, 5, 6, 7, T, T, T, T | 4, 5, 6, 7, T, T, T, T | |
| | | 1 | 0 | 1 | 5, 6, 7, 4, T, T, T, T | 5, 4, 7, 6, T, T, T, T | |
| | | 1 | 1 | 0 | 6, 7, 4, 5, T, T, T, T | 6, 7, 4, 5, T, T, T, T | |
| | | 1 | 1 | 1 | 7, 4, 5, 6, T, T, T, T | 7, 6, 5, 4, T, T, T, T | |
| | Write | 0 | V | V | 0, 1, 2, 3, X, X, X, X | 0, 1, 2, 3, X, X, X, X | 1, 2, 4, 5 |
| | | 1 | V | V | 4, 5, 6, 7, X, X, X, X | 4, 5, 6, 7, X, X, X, X | |
| 8 | Read | 0 | 0 | 0 | 0, 1, 2, 3, 4, 5, 6, 7 | 0, 1, 2, 3, 4, 5, 6, 7 | 2 |
| | | 0 | 0 | 1 | 1, 2, 3, 0, 5, 6, 7, 4 | 1, 0, 3, 2, 5, 4, 7, 6 | |
| | | 0 | 1 | 0 | 2, 3, 0, 1, 6, 7, 4, 5 | 2, 3, 0, 1, 6, 7, 4, 5 | |
| | | 0 | 1 | 1 | 3, 0, 1, 2, 7, 4, 5, 6 | 3, 2, 1, 0, 7, 6, 5, 4 | |
| | | 1 | 0 | 0 | 4, 5, 6, 7, 0, 1, 2, 3 | 4, 5, 6, 7, 0, 1, 2, 3 | |
| | | 1 | 0 | 1 | 5, 6, 7, 4, 1, 2, 3, 0 | 5, 4, 7, 6, 1, 0, 3, 2 | |
| | | 1 | 1 | 0 | 6, 7, 4, 5, 2, 3, 0, 1 | 6, 7, 4, 5, 2, 3, 0, 1 | |
| | | 1 | 1 | 1 | 7, 4, 5, 6, 3, 0, 1, 2 | 7, 6, 5, 4, 3, 2, 1, 0 | |
| | Write | V | V | V | 0, 1, 2, 3, 4, 5, 6, 7 | 0, 1, 2, 3, 4, 5, 6, 7 | 2, 4 |

Note 1. In case of burst length being fixed to 4 by MR0 setting, the internal write operation starts two clock cycles earlier than for the BL8 mode. This means that the starting point for tWR and tWTR will be pulled in by two clocks. In case of burst length being selected on-the-fly via A12/BC#, the internal write operation starts at the same point in time like a burst of 8 write operation. This means that during on-the-fly control, the starting point for tWR and tWTR will not be pulled in by two clocks.

Note 2. 0~7 bit number is value of CA[2:0] that causes this bit to be the first read during a burst.

Note 3. T: Output driver for data and strobes are in high impedance.

Note 4. V: a valid logic level (0 or 1), but respective buffer input ignores level on input pins.

Note 5. X: Don't Care.

## - DLL Reset

The DLL Reset bit is self-clearing, meaning it returns back to the value of '0' after the DLL reset function has been issued. Once the DLL is enabled, a subsequent DLL Reset should be applied. Anytime the DLL reset function is used, tDLLK must be met before any functions that require the DLL can be used (i.e. Read commands or ODT synchronous operations.)

## - Write Recovery

The programmed WR value MR0 (bits A9, A10, and A11) is used for the auto precharge feature along with tRP to determine tDAL. WR (write recovery for auto-precharge) min in clock cycles is calculated by dividing tWR (ns) by tCK (ns) and rounding up to the next integer: WR min [cycles] = Roundup (tWR [ns]/tCK [ns]). The WR must be programmed to be equal or larger than tWR (min).

## - Precharge PD DLL

MR0 (bit A12) is used to select the DLL usage during precharge power-down mode. When MR0 (A12=0), or 'slow-exit', the DLL is frozen after entering precharge power-down (for potential power savings) and upon exit requires tXPDLL to be met prior to the next valid command. When MR0 (A12=1), or 'fast-exit', the DLL is maintained after entering precharge power-down and upon exiting power-down requires tXP to be met prior to the next valid command.

chanhvinh.com



## Mode Register MR1

The Mode Register MR1 stores the data for enabling or disabling the DLL, output strength, Rtt_Nom impedance, additive latency, WRITE leveling enable and Qoff. The Mode Register 1 is written by asserting low on CS#, RAS#, CAS#, WE#, high on BA0 and low on BA1 and BA2, while controlling the states of address pins according to the following figure.

### Table 7. Extended Mode Register EMR (1) Bitmap

| BA2 | BA1 | BA0 | A13 | A12 | A11 | A10 | A9 | A8 | A7 | A6 | A5 | A4 | A3 | A2 | A1 | A0 | |
|---|---|---|---|---|---|---|---|---|---|---|---|---|---|---|---|---|---|
| 0*1 | 0 | 1 | 0*1 | Qoff | 0*1 | 0*1 | Rtt | 0*1 | Level | Rtt | D.I.C | AL | | Rtt | D.I.C | DLL | Mode Register (1) |

| BA1 | BA0 | MRS mode |
|---|---|---|
| 0 | 0 | MR0 |
| 0 | 1 | MR1 |
| 1 | 0 | MR2 |
| 1 | 1 | MR3 |

| A11 | TDQS |
|---|---|
| 0 | Disabled |
| 1 | Enabled |

| A4 | A3 | Additive Latency |
|---|---|---|
| 0 | 0 | 0 (AL disabled) |
| 0 | 1 | CL – 1 |
| 1 | 0 | CL – 2 |
| 1 | 1 | Reserved |

| A0 | DLL Enable |
|---|---|
| 0 | Enable |
| 1 | Disable |

| A12 | Qoff *2 |
|---|---|
| 0 | Output buffer enabled |
| 1 | Output buffer disabled |

| A7 | Write leveling enable |
|---|---|
| 0 | Disabled |
| 1 | Enabled |

| A9 | A6 | A2 | Rtt_Nom *3 |
|---|---|---|---|
| 0 | 0 | 0 | Rtt_Nom disabled |
| 0 | 0 | 1 | RZQ/4 |
| 0 | 1 | 0 | RZQ/2 |
| 0 | 1 | 1 | RZQ/6 |
| 1 | 0 | 0 | RZQ/12 *4 |
| 1 | 0 | 1 | RZQ/8 *4 |
| 1 | 1 | 0 | Reserved |
| 1 | 1 | 1 | Reserved |

Note: RZQ = 240 Ω

Note: RZQ = 240 Ω

| A5 | A1 | Output Driver Impedance Control |
|---|---|---|
| 0 | 0 | RZQ/6 |
| 0 | 1 | RZQ/7 |
| 1 | 0 | Reserved |
| 1 | 1 | Reserved |

Note 1. Reserved for future use and must be set to 0 when programming the MR.
Note 2. Outputs disabled - DQs, DQSs, DQS#s.
Note 3. In Write leveling Mode (MR1 [bit7] = 1) with MR1 [bit12] =1, all RTT_Nom settings are allowed; in Write Leveling Mode (MR1 [bit7] = 1) with MR1 [bit12]=0, only RTT_Nom settings of RZQ/2, RZQ/4 and RZQ/6 are allowed.
Note 4. If RTT_Nom is used during Writes, only the values RZQ/2, RZQ/4 and RZQ/6 are allowed.

chanhvinh.com



## - DLL Enable/Disable

The DLL must be enabled for normal operation. DLL enable is required during power up initialization, and upon returning to normal operation after having the DLL disabled. During normal operation (DLL-on) with MR1 (A0=0), the DLL is automatically disabled when entering Self-Refresh operation and is automatically re-enable upon exit of Self-Refresh operation. Any time the DLL is enabled and subsequently reset, tDLLK clock cycles must occur before a Read or synchronous ODT command can be issued to allow time for the internal clock to be synchronized with the external clock. Failing to wait for synchronization to occur may result in a violation of the tDQSCK, tAON, or tAOF parameters. During tDLLK, CKE must continuously be registered high. DDR3L SDRAM does not require DLL for any Write operation, expect when RTT_WR is enabled and the DLL is required for proper ODT operation. For more detailed information on DLL Disable operation are described in DLL-off Mode. The direct ODT feature is not supported during DLL-off mode. The on-die termination resistors must be disabled by continuously registering the ODT pin low and/or by programming the RTT_Nom bits MR1{A9,A6,A2} to {0,0,0} via a mode register set command during DLL-off mode.

The dynamic ODT feature is not supported at DLL-off mode. User must use MRS command to set Rtt_WR, MR2 {A10, A9} = {0, 0}, to disable Dynamic ODT externally

## - Output Driver Impedance Control

The output driver impedance of the DDR3L SDRAM device is selected by MR1 (bit A1 and A5) as shown in MR1 definition figure.

## - ODT Rtt Values

DDR3L SDRAM is capable of providing two different termination values (Rtt_Nom and Rtt_WR). The nominal termination value Rtt_Nom is programmable in MR1. A separate value (Rtt_WR) may be programmable in MR2 to enable a unique Rtt value when ODT is enabled during writes. The Rtt_WR value can be applied during writes even when Rtt_Nom is disabled.

## - Additive Latency (AL)

Additive Latency (AL) operation is supported to make command and data bus efficient for sustainable bandwidth in DDR3L SDRAM. In this operation, the DDR3L SDRAM allows a read or write command (either with or without auto-precharge) to be issued immediately after the active command. The command is held for the time of the Additive Latency (AL) before it is issued inside the device. The Read Latency (RL) is controlled by the sum of the AL and CAS Latency (CL) register settings. Write Latency (WL) is controlled by the sum of the AL and CAS Write Latency (CWL) register settings. A summary of the AL register options are shown in MR.

## - Write leveling

For better signal integrity, DDR3L memory module adopted fly-by topology for the commands, addresses, control signals, and clocks. The fly-by topology has benefits from reducing number of stubs and their length but in other aspect, causes flight time skew between clock and strobe at every DRAM on DIMM. It makes difficult for the Controller to maintain tDQSS, tDSS, and tDSH specification. Therefore, the controller should support ‘write leveling’ in DDR3L SDRAM to compensate for skew.

## - Output Disable

The DDR3L SDRAM outputs maybe enable/disabled by MR1 (bit 12) as shown in MR1 definition. When this feature is enabled (A12=1) all output pins (DQs, DQS, DQS#, etc.) are disconnected from the device removing any loading of the output drivers. This feature may be useful when measuring modules power for example. For normal operation A12 should be set to ‘0’.

## - TDQS enable

TDQS (Termination Data Strobe) is a feature of DDR3L SDRAM that provides additional termination resistance outputs that may be useful in some system configurations. In contrast to the RDQS function of DDR2 SDRAM, TDQS provides the termination resistance function only. The data strobe function of RDQS is not provided by TDQS. The TDQS and DM functions share the same pin. When the TDQS function is enabled via the mode register, the DM function is not supported. When the TDQS function is disabled, the DM function is provided and the TDQS# pin is not used. The TDQS function is available in X8 DDR3L SDRAM only.

chanhvinh.com



## Mode Register MR2

The Mode Register MR2 stores the data for controlling refresh related features, Rtt_WR impedance, and CAS write latency. The Mode Register 2 is written by asserting low on CS#, RAS#, CAS#, WE#, high on BA1 and low on BA0 and BA2, while controlling the states of address pins according to the table below.

### Table 8. Extended Mode Register EMR (2) Bitmap

| BA2 | BA1 | BA0 | A13 | A12 | A11 | A10 | A9 | A8 | A7 | A6 | A5 | A4 | A3 | A2 | A1 | A0 | |
|---|---|---|---|---|---|---|---|---|---|---|---|---|---|---|---|---|---|
| 0*1 | 1 | 0 | 0*1 | | | Rtt_WR | | 0*1 | SRT | 0 | CWL | | | PASR | | | Mode Register (2) |

| BA1 | BA0 | MRS mode |
|---|---|---|
| 0 | 0 | MR0 |
| 0 | 1 | MR1 |
| 1 | 0 | MR2 |
| 1 | 1 | MR3 |

| A10 | A9 | RTT_WR *2 |
|---|---|---|
| 0 | 0 | Dynamic ODT off (Write does not affect Rtt value) |
| 0 | 1 | RZQ/4 |
| 1 | 0 | RZQ/2 |
| 1 | 1 | Reserved |

| A7 | Self-Refresh Temperature (SRT) Range |
|---|---|
| 0 | Normal operating temperature range |
| 1 | Extended (optional) operating temperature range |

| A2 | A1 | A0 | Partial Array Self-Refresh (Optional) |
|---|---|---|---|
| 0 | 0 | 0 | Full Array |
| 0 | 0 | 1 | Half Array (BA[2:0]=000,001,010,&011) |
| 0 | 1 | 0 | Quarter Array (BA[2:0]=000,&001) |
| 0 | 1 | 1 | 1/8th Array (BA[2:0]=000) |
| 1 | 0 | 0 | 3/4 Array (BA[2:0]=010,011,100.101,110,&111) |
| 1 | 0 | 1 | Half Array (BA[2:0]=100,101,110,&111) |
| 1 | 1 | 0 | Quarter Array (BA[2:0]=110,&111) |
| 1 | 1 | 1 | 1/8th Array (BA[2:0]=111) |

| A5 | A4 | A3 | CAS write Latency (CWL) |
|---|---|---|---|
| 0 | 0 | 0 | 5 (tCK(avg)≧2.5ns) |
| 0 | 0 | 1 | 6 (2.5ns＞tCK(avg)≧1.875ns) |
| 0 | 1 | 0 | 7 (1.875ns＞tCK(avg)≧1.5ns) |
| 0 | 1 | 1 | 8 (1.5ns＞tCK(avg)≧1.25ns) |
| 1 | 0 | 0 | Reserved |
| 1 | 0 | 1 | Reserved |
| 1 | 1 | 0 | Reserved |
| 1 | 1 | 1 | Reserved |

Note 1. BA2 and A8, A11~ A13 are RFU and must be programmed to 0 during MRS.
Note 2. The Rtt_WR value can be applied during writes even when Rtt_Nom is disabled.
During write leveling, Dynamic ODT is not available.

chanhvinh.com



### - Partial Array Self-Refresh (PASR)

If PASR (Partial Array Self-Refresh) is enabled, data located in areas of the array beyond the specified address range will be lost if Self-Refresh is entered. Data integrity will be maintained if tREFI conditions are met and no Self-Refresh command is issued.

### - CAS Write Latency (CWL)

The CAS Write Latency is defined by MR2 (bits A3-A5) shown in MR2. CAS Write Latency is the delay, in clock cycles, between the internal Write command and the availability of the first bit of input data. DDR3L DRAM does not support any half clock latencies. The overall Write Latency (WL) is defined as Additive Latency (AL) + CAS Write Latency (CWL); WL=AL+CWL.

For more information on the supported CWL and AL settings based on the operating clock frequency, refer to “Standard Speed Bins”. For detailed Write operation refer to “WRITE Operation”.

### - Dynamic ODT (Rtt_WR)

DDR3L SDRAM introduces a new feature “Dynamic ODT”. In certain application cases and to further enhance signal integrity on the data bus, it is desirable that the termination strength of the DDR3L SDRAM can be changed without issuing an MRS command. MR2 Register locations A9 and A10 configure the Dynamic ODT settings.

DDR3L SDRAM introduces a new feature “Dynamic ODT”. In certain application cases and to further enhance signal integrity on the data bus, it is desirable that the termination strength of the DDR3L SDRAM can be changed without issuing an MRS command. MR2 Register locations A9 and A10 configure the Dynamic ODT settings. In Write leveling mode, only RTT_Nom is available. For details on Dynamic ODT operation, refer to “Dynamic ODT”.

### - Self-Refresh Temperature (SRT)

Mode register MR2[7] is used to disable/enable the SRT function. When SRT is disabled, the self refresh mode’s refresh rate is assumed to be at the normal 85°C limit (sometimes referred to as 1x refresh rate). In the disabled mode, SRT requires the user to ensure the DRAM never exceeds a TC of 85°C while in self refresh mode.

When SRT is enabled, the DRAM self refresh is changed internally from 1x to 2x, regardless of the case temperature. This enables the user to operate the DRAM beyond the standard 85°C limit up to the optional extended temperature range of 95°C while in self refresh mode. The standard self refresh current test specifies test conditions to normal case temperature (85°C) only, meaning if SRT is enabled, the standard self refresh current specifications do not apply (see Extended Temperature Usage).

### Extended Temperature Usage

DDR3L SDRAM supports the optional extended case temperature (TC) range of 0°C to 95°C. The extended temperature range DRAM must be refreshed externally at 2x (double refresh) anytime the case temperature is above 85°C (and does not exceed 95°C). The external refresh requirement is accomplished by reducing the refresh period from 64ms to 32ms. Thus, SRT must be enabled when TC is above 85°C or self refresh cannot be used until TC is at or below 85°C.

### Table 9. Self-Refresh mode summary

| MR2 A[7] | Self-Refresh operation | Allowed Operating Temperature Range for Self-Refresh mode |
|---|---|---|
| 0 | Self-Refresh rate appropriate for the Normal Temperature Range | Normal (0 ~ 85C) |
| 1 | Self-Refresh appropriate for either the Normal or Extended Temperature Ranges.The DRAM must support Extended Temperature Range. The value of the SRT bit can effect self-refresh power consumption, please refer to the IDD table for details. | Normal and Extended (0 ~ 95C) |

chanhvinh.com



## Mode Register MR3

The Mode Register MR3 controls Multi-purpose registers. The Mode Register 3 is written by asserting low on CS#, RAS#, CAS#, WE#, high on BA1 and BA0, and low on BA2 while controlling the states of address pins according to the table below

### Table 10. Extended Mode Register EMR (3) Bitmap

| BA2 | BA1 | BA0 | A13 | A12 | A11 | A10 | A9 | A8 | A7 | A6 | A5 | A4 | A3 | A2 | A1 | A0 | Address Field |
|---|---|---|---|---|---|---|---|---|---|---|---|---|---|---|---|---|---|
| 0*1 | 1 | 1 | 0*1 | | | | | | | | | | | MPR | MPR Loc | | Mode Register (3) |

| BA1 | BA0 | MRS mode |
|---|---|---|
| 0 | 0 | MR0 |
| 0 | 1 | MR1 |
| 1 | 0 | MR2 |
| 1 | 1 | MR3 |

| A2 | MPR |
|---|---|
| 0 | Normal operation *3 |
| 1 | Dataflow from MPR |

| A1 | A0 | MPR location |
|---|---|---|
| 0 | 0 | Predefined pattern *2 |
| 0 | 1 | RFU |
| 1 | 0 | RFU |
| 1 | 1 | RFU |

Note 1. BA2, A3 - A13 are RFU and must be programmed to 0 during MRS.
Note 2. The predefined pattern will be used for read synchronization.
Note 3. When MPR control is set for normal operation (MR3 A[2] = 0) then MR3 A[1:0] will be ignored.

chanhvinh.com



## Table 11. Absolute Maximum DC Ratings

| Symbol | Parameter | Values | Unit | Note |
|---|---|---|---|---|
| $V_{DD}$ | Voltage on VDD pin relative to Vss | -0.4 ~ 1.8 | V | 1,3 |
| $V_{DDQ}$ | Voltage on VDDQ pin relative to Vss | -0.4 ~ 1.8 | V | 1,3 |
| $V_{IN}$, $V_{OUT}$ | Voltage on any pin relative to Vss | -0.4 ~ 1.8 | V | 1 |
| $T_{STG}$ | Storage temperature | -55 ~ 100 | °C | 1,2 |

Note 1. Stresses greater than those listed under "Absolute Maximum Ratings" may cause permanent damage to the device.This is a stress rating only and functional operation of the device at these or any other conditions above those indicated in the operational sections of this specification is not implied. Exposure to absolute maximum rating conditions for extended periods may affect reliability.
Note 2. Storage Temperature is the case surface temperature on the center/top side of the DRAM.
Note 3. VDD and VDDQ must be within 300mV of each other at all times; and Vref must be not greater than 0.6VDDQ, when VDD and VDDQ are less than 500mV; Vref may be equal to or less than 300mV.

## Table 12. Temperature Range

| Symbol | Parameter | Values | Unit | Note |
|---|---|---|---|---|
| $T_{OPER}$ | Commercial Operating Temperature Range | 0 ~ 95 | °C | 1-3 |
| | Industrial Operating Temperature Range | -40 ~ 95 | °C | 1-4 |

Note 1. Operating temperature is the case surface temperature on center/top of the DRAM.
Note 2. The operating temperature range is the temperature where all DRAM specification will be supported. Outside of this temperature range, even if it is still within the limit of stress condition, some deviation on portion of operating specification may be required. During operation, the DRAM case temperature must be maintained between 0-85°C under all other specification parameter. Supporting 0 - 85 °C with full JEDEC AC & DC specifications.
Note 3. Some applications require operation of the DRAM in the Extended Temperature Range between 85 °C and 95 °C case temperature. Full specifications are guaranteed in this range, but the following additional apply.
a. Refresh commands must be doubled in frequency, therefore, reducing the Refresh interval tREFI to 3.9us. It is also possible to specify a component with 1x refresh (tREFI to 7.8us) in the Extended Temperature Range.
b. If Self-Refresh operation is required in the Extended Temperature Range, then it is mandatory to either use the Manual Self-Refresh mode with Extended Temperature Range capability (MR2 A6=0 and MR2 A7=1) or enable the optional Auto Self-Refresh mode (MR2 A6=1 and MR2 A7=0).
Note 4. During Industrial Temperature Operation Range, the DRAM case temperature must be maintained between -40°C~95°C under all operating Conditions.

## Table 13. Recommended DC Operating Conditions

| Symbol | Parameter | Min. | Typ. | Max. | Unit | Note |
|---|---|---|---|---|---|---|
| $V_{DD}$ | Power supply voltage | 1.283 | 1.35 | 1.45 | V | 1,2 |
| $V_{DDQ}$ | Power supply voltage for output | 1.283 | 1.35 | 1.45 | V | 1,2 |

Note 1. Under all conditions VDDQ must be less than or equal to VDD.
Note 2. VDDQ tracks with VDD. AC parameters are measured with VDD and VDDQ tied together.

chanhvinh.com



## Table 14. Single-Ended AC and DC Input Levels for Command and Address

| Symbol | Parameter | DDR3L-1600 | | Unit | Note |
|---|---|---|---|---|---|
| | | Min. | Max. | | |
| $V_{IH}$.CA(DC90) | DC input logic high | $V_{REF}$+0.09 | $V_{DD}$ | V | 1,5 |
| $V_{IL}$.CA(DC90) | DC input logic low | $V_{SS}$ | $V_{REF}$-0.09 | V | 1,6 |
| $V_{IH}$.CA(AC160) | AC input logic high | $V_{REF}$+0.16 | - | V | 1,2 |
| $V_{IL}$.CA(AC160) | AC input logic low | - | $V_{REF}$-0.16 | V | 1,2 |
| $V_{IH}$.CA(AC135) | AC input logic high | $V_{REF}$+0.135 | - | V | 1,2 |
| $V_{IL}$.CA(AC135) | AC input logic low | - | $V_{REF}$-0.135 | V | 1,2 |
| $V_{RefCA}$(DC) | Reference Voltage for ADD, CMD inputs | 0.49x$V_{DD}$ | 0.51x$V_{DD}$ | V | 3,4 |

Note 1. For input only pins except RESET#. Vref = VrefCA(DC).
Note 2. See “Overshoot and Undershoot Specifications”.
Note 3. The ac peak noise on VRef may not allow VRef to deviate from VRefCA(DC) by more than ±1% VDD.
Note 4. For reference: approx. VDD/2 ±13.5 mV.
Note 5. VIH(dc) is used as a simplified symbol for VIH.CA(DC90)
Note 6. VIL(dc) is used as a simplified symbol for VIL.CA(DC90)
Note 7. VIH(ac) is used as a simplified symbol for VIH.CA(AC160) and VIH.CA(AC135); VIH.CA(AC160) value is used when Vref + 0.160V is referenced, VIH.CA(AC135) value is used when Vref + 0.135V is referenced.
Note 8. VIL(ac) is used as a simplified symbol for VIL.CA(AC160) and VIL.CA(AC135); VIL.CA(AC160) value is used when Vref - 0.160V is referenced, VIL.CA(AC135) value is used when Vref - 0.135V is referenced.

## Table 15. Single-Ended AC and DC Input Levels for DQ and DM

| Symbol | Parameter | DDR3L-1600 | | Unit | Note |
|---|---|---|---|---|---|
| | | Min. | Max. | | |
| $V_{IH}$.DQ(DC90) | DC input logic high | $V_{REF}$+0.09 | $V_{DD}$ | V | 1,5 |
| $V_{IL}$.DQ(DC90) | DC input logic low | $V_{SS}$ | $V_{REF}$-0.09 | V | 1,6 |
| $V_{IH}$.DQ(AC135) | AC input logic high | $V_{REF}$+0.135 | - | V | 1,2 |
| $V_{IL}$.DQ(AC135) | AC input logic low | - | $V_{REF}$-0.135 | V | 1,2 |
| $V_{RefDQ}$(DC) | Reference Voltage for DQ, DM inputs | 0.49x$V_{DD}$ | 0.51x$V_{DD}$ | V | 3,4 |

Note 1. For input only pins except RESET#. Vref = VrefDQ(DC).
Note 2. See “Overshoot and Undershoot Specifications”.
Note 3. The ac peak noise on VRef may not allow VRef to deviate from VRefDQ(DC) by more than ±1% VDD.
Note 4. For reference: approx. VDD/2 ±13.5 mV.
Note 5. VIH(dc) is used as a simplified symbol for VIH.DQ(DC90)
Note 6. VIL(dc) is used as a simplified symbol for VIL.DQ(DC90)
Note 7. VIH(ac) is used as a simplified symbol for VIH.DQ(AC135) and VIH.DQ(AC135) value is used when Vref + 0.135V is referenced.
Note 8. VIL(ac) is used as a simplified symbol for VIL.DQ(AC135) and VIL.DQ(AC135) value is used when Vref - 0.135V is referenced.

chanhvinh.com



## Table 16. Differential AC and DC Input Levels

| Symbol | Parameter | Values | | Unit | Note |
|---|---|---|---|---|---|
| | | Min. | Max. | | |
| $V_{IH}diff$ | Differential input high | + 0.18 | Note 3 | V | 1 |
| $V_{IL}diff$ | Differential input logic low | Note 3 | - 0.18 | V | 1 |
| $V_{IH}diff(ac)$ | Differential input high ac | 2 x ($V_{IH}(ac)$ - $V_{REF}$) | Notes 3 | V | 2 |
| $V_{IL}diff(ac)$ | Differential input low ac | Note 3 | 2 x ($V_{IL}(ac)$ - $V_{REF}$) | V | 2 |

Note 1. Used to define a differential signal slew-rate.
Note 2. For CK - CK# use VIH/VIL(ac) of ADD/CMD and VREFCA; for DQS, DQS# use VIH/VIL(ac) of DQs and VREFDQ; if a reduced ac-high or ac-low level is used for a signal group, then the reduced level applies also here.
Note 3. These values are not defined; however, the single-ended signals CK, CK#, DQS, DQS# need to be within the respective limits (VIH(dc) max, VIL(dc)min) for single-ended signals as well as the limitations for overshoot and undershoot.

## Table 17. Capacitance ($V_{DD}$ = 1.35V, $T_{OPER}$ = 25 °C)

| Symbol | Parameter | DDR3L-1600 | | Unit | Note |
|---|---|---|---|---|---|
| | | Min. | Max. | | |
| $C_{IO}$ | Input/output capacitance, (DQ, DM, DQS, DQS#) | 1.4 | 2.2 | pF | 1, 2, 3 |
| $C_{CK}$ | Input capacitance, CK and CK# | 0.8 | 1.4 | pF | 2, 3 |
| $C_{DCK}$ | Input capacitance delta, CK and CK# | 0 | 0.15 | pF | 2, 3, 4 |
| $C_{DDQS}$ | Input/output capacitance delta, DQS and DQS# | 0 | 0.15 | pF | 2, 3, 5 |
| $C_I$ | Input capacitance, (CTRL, ADD, CMD input-only pins) | 0.75 | 1.2 | pF | 2, 3, 6 |
| $C_{DI_CTRL}$ | Input capacitance delta, (All CTRL input-only pins) | -0.4 | 0.2 | pF | 2, 3, 7, 8 |
| $C_{DI_ADD_CMD}$ | Input capacitance delta, (All ADD, CMD input-only pins) | -0.4 | 0.4 | pF | 2, 3, 9, 10 |
| $C_{DIO}$ | Input/output capacitance delta, (DQ, DM, DQS, DQS#) | -0.5 | 0.3 | pF | 2, 3, 11 |
| $C_{ZQ}$ | Input/output capacitance of ZQ pin | - | 3 | pF | 2, 3, 12 |

Note 1. Although the DM pins have different functions, the loading matches DQ and DQS.
Note 2. This parameter is not subject to production test. It is verified by design and characterization. VDD=VDDQ=1.35V, VBIAS=VDD/2 and on-die termination off.
Note 3. This parameter applies to monolithic devices only; stacked/dual-die devices are not covered here.
Note 4. Absolute value of CCK-CCK#.
Note 5. Absolute value of CIO(DQS)-CIO(DQS#).
Note 6. CI applies to ODT, CS#, CKE, A0-A13, BA0-BA2, RAS#, CAS#, WE#.
Note 7. CDI_CTRL applies to ODT, CS# and CKE.
Note 8. CDI_CTRL=CI(CTRL)-0.5*(CI(CK)+CI(CK#)).
Note 9. CDI_ADD_CMD applies to A0-A12, BA0-BA2, RAS#, CAS# and WE#.
Note 10. CDI_ADD_CMD=CI(ADD_CMD) - 0.5*(CI(CK)+CI(CK#)).
Note 11. CDIO=CIO(DQ,DM) - 0.5*(CIO(DQS)+CIO(DQS#)).
Note 12. Maximum external load capacitance on ZQ pin: 5 pF.

chanhvinh.com



## Table 18. IDD specification parameters and test conditions ($V_{DD}$ = 1.35V, $T_{OPER}$ = 0~95℃ (Commercial), $T_{OPER}$ = -40~95 °C(Industrial))

| Parameter & Test Condition | Symbol | -12 | Unit |
|---|---|---|---|
| | | Max. | |
| **Operating One Bank Active-Precharge Current** **CKE:** High; **External clock:** On; **BL:** 8[*1]; **AL:** 0; **CS#**: High between ACT and PRE; **Command, Address, Bank Address Inputs:** partially toggling; **Data IO:** MID-LEVEL; **DM**:stable at 0; **Bank Activity:** Cycling with one bank active at a time: 0,0,1,1,2,2,...;**Output Buffer and RTT:** Enabled in Mode Registers[*2]; **ODT Signal:** stable at 0. | $I_{DD0}$ | 56 | mA |
| **Operating One Bank Active-Read-Precharge Current** **CKE:** High; **External clock:** On; **BL:** 8[*1, 5]; **AL:**0; **CS#**: High between ACT, RD and PRE; **Command, Address, Bank Address Inputs, Data IO:** partially toggling; **DM**:stable at 0; **Bank Activity:** Cycling with one bank active at a time: 0,0,1,1,2,2,...; **Output Buffer and RTT:** Enabled in Mode Registers[*2]; **ODT Signal:** stable at 0. | $I_{DD1}$ | 72 | mA |
| **Precharge Standby Current** **CKE**: High; **External clock:** On; **BL:** 8[*1]; **AL:** 0; **CS#**: stable at 1; **Command, Address, Bank Address Inputs:** partially toggling; **Data IO:** MID-LEVEL; **DM**:stable at 0; **Bank Activity:** all banks closed; **Output Buffer and RTT:** Enabled in Mode Registers[*2]; **ODT Signal:** stable at 0. | $I_{DD2N}$ | 40 | mA |
| **Precharge Power-Down Current Slow Exit** **CKE:** Low; **External clock:** On; **BL:** 8[*1]; **AL:** 0; **CS#**: stable at 1; **Command, Address, Bank Address Inputs:** stable at 0; **Data IO:** MID-LEVEL; **DM**:stable at 0; **Bank Activity:** all banks closed; **Output Buffer and RTT:** Enabled in Mode Registers[*2]; **ODT Signal:** stable at 0; **Pecharge Power Down Mode**: Slow Exit.[*3] | $I_{DD2P0}$ | 15 | mA |
| **Precharge Power-Down Current Fast Exit** **CKE:** Low; **External clock:** On; **BL:** 8[*1]; **AL:** 0; **CS#**: stable at 1; **Command, Address, Bank Address Inputs:** stable at 0; **Data IO:** MID-LEVEL; **DM**:stable at 0; **Bank Activity:** all banks closed; **Output Buffer and RTT:** Enabled in Mode Registers[*2]; **ODT Signal:** stable at 0; **Pecharge Power Down Mode**: Fast Exit.[*3] | $I_{DD2P1}$ | 25 | mA |
| **Precharge Quiet Standby Current** **CKE**: High; **External clock:** On; **BL:** 8[*1]; **AL:** 0; **CS#**: stable at 1; **Command, Address, Bank Address Inputs:** stable at 0; **Data IO:** MID-LEVEL; **DM**:stable at 0;**Bank Activity:** all banks closed; **Output Buffer and RTT:** Enabled in Mode Registers[*2]; **ODT Signal:** stable at 0. | $I_{DD2Q}$ | 35 | mA |
| **Active Standby Current** **CKE**: High; **External clock:** On; **BL:** 8[*1]; **AL:** 0; **CS#**: stable at 1; **Command, Address, Bank Address Inputs:** partially toggling; **Data IO:** MID-LEVEL; **DM**:stable at 0;**Bank Activity:** all banks open; **Output Buffer and RTT:** Enabled in Mode Registers[*2]; **ODT Signal:** stable at 0. | $I_{DD3N}$ | 48 | mA |
| **Active Power-Down Current** **CKE:** Low; **External clock:** On; **BL:** 8[*1]; **AL:** 0; **CS#**: stable at 1; **Command, Address, Bank Address Inputs:** stable at 0; **Data IO:** MID-LEVEL;**DM**:stable at 0; **Bank Activity:** all banks open; **Output Buffer and RTT:** Enabled in Mode Registers[*2]; **ODT Signal:** stable at 0 | $I_{DD3P}$ | 28 | mA |
| **Operating Burst Read Current** **CKE:** High; **External clock:** On; **BL:** 8[*1, 5]; **AL:** 0; **CS#**: High between RD; **Command, Address, Bank Address Inputs:** partially toggling; **DM**:stable at 0; **Bank Activity:** all banks open, RD commands cycling through banks: 0,0,1,1,2,2,...; **tput Buffer and RTT:** Enabled in Mode Registers[*2]; **ODT Signal:** stable at 0. | $I_{DD4R}$ | 140 | mA |
| **Operating Burst Write Current** **CKE:** High; **External clock:** On; **BL:** 8[*1]; **AL:** 0; **CS#**: High between WR; **Command, Address, Bank Address Inputs:** partially toggling; **DM:** stable at 0; **Bank Activity:** all banks open. **Output Buffer and RTT:** Enabled in Mode Registers[*2]; **ODT Signal:** stable at HIGH. | $I_{DD4W}$ | 150 | mA |

chanhvinh.com



| | | | | |
|---|---|---|---|---|
| **Burst Refresh Current**<br>**CKE:** High; **External clock:** On; **BL:** 8[*1]; **AL:** 0; **CS#**: High between tREF; **Command, Address, Bank Address Inputs:** partially toggling; **Data IO:** MID-LEVEL;**DM**:stable at 0; **Bank Activity:** REF command every tRFC; **Output Buffer and RTT:** Enabled in Mode Registers[*2]; **ODT Signal:** stable at 0. | | $I_{DD5B}$ | 95 | mA |
| **Self Refresh Current:**<br>**Self-Refresh Temperature Range (SRT):** Normal[4]; **CKE:** Low; **External clock:** Off; CK and CK#: LOW; **BL:** 8[*1]; **AL:** 0; **CS#, Command, Address, Bank Address, Data IO:** MID-LEVEL;**DM**:stable at 0; **Bank Activity:** Self-Refresh operation; **Output Buffer and RTT:** Enabled in Mode Registers[*2]; **ODT Signal:** MID-LEVEL | ***T*CASE:** 0 - 85°C | $I_{DD6}$ | 15 | mA |
| | ***T*CASE:** -40 - 95°C | $I_{DD6ET}$ | 20 | mA |
| **Operating Bank Interleave Read Current**<br>**CKE:** High; **External clock:** On; **BL:** 8[*1, 5]; **AL:** CL-1; **CS#**: High between ACT and RDA; **Command, Address, Bank Address Inputs:** partially toggling; **DM**:stable at 0; **Output Buffer and RTT:** Enabled in Mode Registers[*2]; **ODT Signal:** stable at 0. | | $I_{DD7}$ | 195 | mA |
| **RESET Low Current**<br>**RESET:** LOW; **External clock:** Off; **CK and CK#:** LOW; **CKE:** FLOATING; **CS#**, **Command, Address, Bank Address, Data IO:** FLOATING; **ODT Signal:** FLOATING RESET Low current reading is valid once power is stable and RESET has been LOW for at least 1ms. | | $I_{DD8}$ | 10 | mA |

Note 1. Burst Length: BL8 fixed by MRS: set MR0 A[1,0]=00B.
Note 2. Output Buffer Enable: set MR1 A[12] = 0B; set MR1 A[5,1] = 01B; RTT_Nom enable: set MR1 A[9,6,2] = 011B; RTT_Wr enable: set MR2 A[10,9] = 10B.
Note 3. Pecharge Power Down Mode: set MR0 A12=0B for Slow Exit or MR0 A12=1B for Fast Exit.
Note 4. Self-Refresh Temperature Range (SRT): set MR2 A7=0B for normal or 1B for extended temperature range.
Note 5. Read Burst Type: Nibble Sequential, set MR0 A[3] = 0B.
Note 6. Supporting 0 - 85 ˚C with full JEDEC AC & DC specifications. This is the minimum requirements for all operating temperature options. However, for applications operating in Extended Temperature 85℃ ~ 95℃, some optional spec are required.

chanhvinh.com



## Table 19. Electrical Characteristics and Recommended A.C. Operating Conditions

**($V_{DD}$ = 1.35V, $T_{OPER}$ = 0~95℃(Commercial), $T_{OPER}$ = -40~95 °C(Industrial))**

| Symbol | Parameter | | -12 | | Unit | Note |
|---|---|---|---|---|---|---|
| | | | Min. | Max. | | |
| $t_{AA}$ | Internal read command to first data | | 13.75 | 20 | ns | |
| $t_{RCD}$ | ACT to internal read or write delay time | | 13.75 | - | ns | |
| $t_{RP}$ | PRE command period | | 13.75 | - | ns | |
| $t_{RC}$ | ACT to ACT or REF command period | | 48.75 | - | ns | |
| $t_{RAS}$ | ACTIVE to PRECHARGE command period | | 35 | 9 x $t_{REFI}$ | ns | |
| $t_{CK(avg)}$ | Average clock period | CL=5, CWL=5 | 3.0 | 3.3 | ns | 33 |
| | | CL=6, CWL=5 | 2.5 | 3.3 | ns | 33 |
| | | CL=7, CWL=6 | 1.875 | <2.5 | ns | 33 |
| | | CL=8, CWL=6 | 1.875 | <2.5 | ns | 33 |
| | | CL=9, CWL=7 | 1.5 | <1.875 | ns | 33 |
| | | CL=10, CWL=7 | 1.5 | <1.875 | ns | 33 |
| | | CL=11, CWL=8 | 1.25 | <1. 5 | ns | 33 |
| $t_{CK\ (DLL_OFF)}$ | Minimum Clock Cycle Time (DLL off mode) | | 8 | - | ns | 6 |
| $t_{CH(avg)}$ | Average clock HIGH pulse width | | 0.47 | 0.53 | $t_{CK}$ | |
| $t_{CL(avg)}$ | Average Clock LOW pulse width | | 0.47 | 0.53 | $t_{CK}$ | |
| $t_{DQSQ}$ | DQS, DQS# to DQ skew, per group, per access | | - | 100 | ps | 13 |
| $t_{QH}$ | DQ output hold time from DQS, DQS# | | 0.38 | - | $t_{CK}$ | 13 |
| $t_{LZ(DQ)}$ | DQ low-impedance time from CK, CK# | | -450 | 225 | ps | 13,14 |
| $t_{HZ(DQ)}$ | DQ high impedance time from CK, CK# | | - | 225 | ps | 13,14 |
| $t_{DS(base)}$ | Data setup time to DQS, DQS# referenced to Vih(ac) / Vil(ac) levels | AC135 | 25 | - | ps | 17 |
| $t_{DH(base)}$ | Data hold time from DQS, DQS# referenced to Vih(dc) / Vil(dc) levels | DC90 | 55 | - | ps | 17 |
| $t_{DIPW}$ | DQ and DM Input pulse width for each input | | 360 | - | ps | |
| $t_{RPRE}$ | DQS,DQS# differential READ Preamble | | 0.9 | - | $t_{CK}$ | 13,19 |
| $t_{RPST}$ | DQS, DQS# differential READ Postamble | | 0.3 | - | $t_{CK}$ | 11,13 |
| $t_{QSH}$ | DQS, DQS# differential output high time | | 0.4 | - | $t_{CK}$ | 13 |
| $t_{QSL}$ | DQS, DQS# differential output low time | | 0.4 | - | $t_{CK}$ | 13 |
| $t_{WPRE}$ | DQS, DQS# differential WRITE Preamble | | 0.9 | - | $t_{CK}$ | 1 |
| $t_{WPST}$ | DQS, DQS# differential WRITE Postamble | | 0.3 | - | $t_{CK}$ | 1 |
| $t_{DQSCK}$ | DQS, DQS# rising edge output access time from rising CK, CK# | | -225 | 225 | ps | 13 |
| $t_{LZ(DQS)}$ | DQS and DQS# low-impedance time (Referenced from RL - 1) | | -450 | 225 | ps | 13, 14 |
| $t_{HZ(DQS)}$ | DQS and DQS# high-impedance time (Referenced from RL + BL/2) | | - | 225 | ps | 13, 14 |
| $t_{DQSL}$ | DQS, DQS# differential input low pulse width | | 0.45 | 0.55 | $t_{CK}$ | 29, 31 |
| $t_{DQSH}$ | DQS, DQS# differential input high pulse width | | 0.45 | 0.55 | $t_{CK}$ | 30, 31 |
| $t_{DQSS}$ | DQS, DQS# rising edge to CK, CK# rising edge | | -0.27 | 0.27 | $t_{CK}$ | |
| $t_{DSS}$ | DQS, DQS# falling edge setup time to CK, CK# rising edge | | 0.18 | - | $t_{CK}$ | 32 |
| $t_{DSH}$ | DQS, DQS# falling edge hold time from CK, CK# rising edge | | 0.18 | - | $t_{CK}$ | 32 |
| $t_{DLLK}$ | DLL locking time | | 512 | - | $t_{CK}$ | |
| $t_{RTP}$ | Internal READ Command to PRECHARGE Command delay | | max ($4t_{CK}$, 7.5ns) | - | $t_{CK}$ | |
| $t_{WTR}$ | Delay from start of internal write transaction to internal read command | | max ($4t_{CK}$, 7.5ns) | - | $t_{CK}$ | 18 |
| $t_{WR}$ | WRITE recovery time | | 15 | - | ns | 18 |
| $t_{MRD}$ | Mode Register Set command cycle time | | 4 | - | $t_{CK}$ | |

chanhvinh.com



| | | | | | | |
|---|---|---|---|---|---|---|
| $t_{MOD}$ | Mode Register Set command update delay | | max (12$t_{CK}$, 15ns) | - | $t_{CK}$ | |
| $t_{CCD}$ | CAS# to CAS# command delay | | 4 | - | $t_{CK}$ | |
| $t_{DAL(min)}$ | Auto precharge write recovery + prechargetime | | WR + $t_{RP}$ | | $t_{CK}$ | |
| $t_{MPRR}$ | Multi-Purpose Register Recovery Time | | 1 | - | $t_{CK}$ | 22 |
| $t_{RRD}$ | ACTIVE to ACTIVE command period | | max (4$t_{CK}$, 6ns) | - | $t_{CK}$ | |
| $t_{FAW}$ | Four activate window | | 30 | - | ns | |
| $t_{IS(base)}$ | Command and Address setup time to CK, CK# referenced to Vih(ac) / Vil(ac) levels | AC160 | 60 | - | ps | 16 |
| | | AC135 | 185 | - | ps | 16,27 |
| $t_{IH(base)}$ | Command and Address hold time from CK, CK# referenced to Vih(dc) / Vil(dc) levels | DC90 | 130 | - | ps | 16 |
| $t_{IPW}$ | Control and Address Input pulse width for each input | | 560 | - | ps | 28 |
| $t_{ZQinit}$ | Power-up and RESET calibration time | | 512 | - | $t_{CK}$ | |
| $t_{ZQoper}$ | Normal operation Full calibration time | | 256 | - | $t_{CK}$ | |
| $t_{ZQCS}$ | Normal operation Short calibration time | | 64 | - | $t_{CK}$ | 23 |
| $t_{XPR}$ | Exit Reset from CKE HIGH to a valid command | | max (5$t_{CK}$, $t_{RFC(min)}$ + 10ns) | - | $t_{CK}$ | |
| $t_{XS}$ | Exit Self Refresh to commands not requiring a locked DLL | | max (5$t_{CK}$, $t_{RFC(min)}$ + 10ns) | - | $t_{CK}$ | |
| $t_{XSDLL}$ | Exit Self Refresh to commands requiring a locked DLL | | $t_{DLLK(min)}$ | - | $t_{CK}$ | |
| $t_{CKESR}$ | Minimum CKE low width for Self Refresh entry to exit timing | | $t_{CKE(min)}$ + 1$t_{CK}$ | - | $t_{CK}$ | |
| $t_{CKSRE}$ | Valid Clock Requirement after Self Refresh Entry (SRE) or Power-Down Entry (PDE) | | max (5$t_{CK}$, 10 ns) | - | $t_{CK}$ | |
| $t_{CKSRX}$ | Valid Clock Requirement before Self Refresh Exit (SRX) or Power-Down Exit (PDX) or Reset Exit | | max (5$t_{CK}$, 10 ns) | - | $t_{CK}$ | |
| $t_{XP}$ | Exit Power Down with DLL on to any valid command; Exit Precharge Power Down with DLL frozen to commands not requiring a locked DLL | | max (3$t_{CK}$, 6 ns) | - | $t_{CK}$ | |
| $t_{XPDLL}$ | Exit Precharge Power Down with DLL frozen to commands requiring a lockedDLL | | max (10$t_{CK}$, 24 ns) | - | $t_{CK}$ | 2 |
| $t_{CKE}$ | CKE minimum pulse width | | max (3$t_{CK}$, 5 ns) | - | $t_{CK}$ | |
| $t_{CPDED}$ | Command pass disable delay | | 1 | - | $t_{CK}$ | |
| $t_{PD}$ | Power Down Entry to Exit Timing | | $t_{CKE\ (min)}$ | 9 x $t_{REFI}$ | | 15 |
| $t_{ACTPDEN}$ | Timing of ACT command to Power Down entry | | 1 | - | $t_{CK}$ | 20 |
| $t_{PRPDEN}$ | Timing of PRE or PREA command to Power Down entry | | 1 | - | $t_{CK}$ | 20 |
| $t_{RDPDEN}$ | Timing of RD/RDA command to Power Down entry | | RL+4+1 | - | $t_{CK}$ | |
| $t_{WRPDEN}$ | Timing of WR command to Power Down entry (BL8OTF, BL8MRS, BC4OTF) | | WL+4+ ($t_{WR}$/$t_{CK}$) | - | $t_{CK}$ | 9 |
| $t_{WRAPDEN}$ | Timing of WRA command to Power Down entry (BL8OTF, BL8MRS,BC4OTF) | | WL+4+WR +1 | - | $t_{CK}$ | 10 |
| $t_{WRPDEN}$ | Timing of WR command to Power Down entry (BC4MRS) | | WL+2+ ($t_{WR}$/$t_{CK}$) | - | $t_{CK}$ | 9 |
| $t_{WRAPDEN}$ | Timing of WRA command to Power Down entry (BC4MRS) | | WL+2+WR +1 | - | $t_{CK}$ | 10 |
| $t_{REFPDEN}$ | Timing of REF command to Power Down entry | | 1 | - | $t_{CK}$ | 20, 21 |
| $t_{MRSPDEN}$ | Timing of MRS command to Power Down entry | | $t_{MOD(min)}$ | - | | |
| ODTLon | ODT turn on Latency | | WL - 2 = CWL + AL - 2 | | $t_{CK}$ | |
| ODTLoff | ODT turn off Latency | | WL - 2 = CWL + AL - 2 | | | |
| ODTH4 | ODT high time without write command or with write command and BC4 | | 4 | - | $t_{CK}$ | |
| ODTH8 | ODT high time with Write command and BL8 | | 6 | - | $t_{CK}$ | |

chanhvinh.com



| | | | | | | |
|---|---|---|---|---|---|---|
| $t_{AONPD}$ | Asynchronous RTT turn-on delay (Power- Down with DLL frozen) | | 2 | 8.5 | ns | |
| $t_{AOFPD}$ | Asynchronous RTT turn-off delay (Power-Down with DLL frozen) | | 2 | 8.5 | ns | |
| $t_{AON}$ | RTT turn-on | | -225 | 225 | ps | 7 |
| $t_{AOF}$ | RTT_Nom and RTT_WR turn-off time from ODTLoff reference | | 0.3 | 0.7 | $t_{CK}$ | 8 |
| $t_{ADC}$ | RTT dynamic change skew | | 0.3 | 0.7 | $t_{CK}$ | |
| $t_{WLMRD}$ | First DQS/DQS# rising edge after write leveling mode is programmed | | 40 | - | $t_{CK}$ | 3 |
| $t_{WLDQSEN}$ | DQS/DQS# delay after write leveling mode is programmed | | 25 | - | $t_{CK}$ | 3 |
| $t_{WLS}$ | Write leveling setup time from rising CK, CK# crossing to rising DQS, DQS# crossing | | 165 | - | ps | |
| $t_{WLH}$ | Write leveling hold time from rising DQS, DQS# crossing to rising CK, CK# crossing | | 165 | - | ps | |
| $t_{WLO}$ | Write leveling output delay | | 0 | 7.5 | ns | |
| $t_{WLOE}$ | Write leveling output error | | 0 | 2 | ns | |
| $t_{RFC}$ | REF command to ACT or REF command time | | 110 | - | ns | |
| $t_{REFI}$ | Average periodic refresh interval | -40℃ to 85℃ | - | 7.8 | µs | |
| | | 85℃ to 95℃ | - | 3.9 | µs | |

Note 1. Actual value dependant upon measurement level.
Note 2. Commands requiring a locked DLL are: READ (and RAP) and synchronous ODT commands.
Note 3. The max values are system dependent.
Note 4. WR as programmed in mode register.
Note 5. Value must be rounded-up to next higher integer value.
Note 6. There is no maximum cycle time limit besides the need to satisfy the refresh interval, tREFI.
Note 7. For definition of RTT turn-on time tAON See “Timing Parameters”.
Note 8. For definition of RTT turn-off time tAOF See “Timing Parameters”.
Note 9. tWR is defined in ns, for calculation of tWRPDEN it is necessary to round up tWR / tCK to the next integer.
Note 10. WR in clock cycles as programmed in MR0.
Note 11. The maximum read postamble is bound by tDQSCK(min) plus tQSH(min) on the left side and tHZ(DQS)max on the right side. See “Clock to Data Strobe Relationship”.
Note 12. Output timing deratings are relative to the SDRAM input clock. When the device is operated with input clock jitter, this parameter needs to be derated by t.b.d.
Note 13. Value is only valid for RON34.
Note 14. Single ended signal parameter.
Note 15. tREFI depends on TOPER.
Note 16. tIS(base) and tIH(base) values are for 1V/ns CMD/ADD single-ended slew rate and 2V/ns CK, CK# differential slew rate. Note for DQ and DM signals, VREF(DC) = VRefDQ(DC). For input only pins except RESET#, VRef(DC) = VRefCA(DC). See “Address / Command Setup, Hold and Derating”.
Note 17. tDS(base) and tDH(base) values are for 1V/ns DQ single-ended slew rate and 2V/ns DQS, DQS# differential slew rate. Note for DQ and DM signals, VREF(DC) = VRefDQ(DC). For input only pins except RESET#, VRef(DC) = VRefCA(DC). See “Data Setup, Hold and Slew Rate Derating”.
Note 18. Start of internal write transaction is defined as follows:
- For BL8 (fixed by MRS and on- the-fly): Rising clock edge 4 clock cycles after WL.
- For BC4 (on- the- fly): Rising clock edge 4 clock cycles after WL.
- For BC4 (fixed by MRS): Rising clock edge 2 clock cycles after WL.

Note 19. The maximum read preamble is bound by tLZ(DQS)min on the left side and tDQSCK(max) on the right side. See “Clock to Data Strobe Relationship”.
Note 20. CKE is allowed to be registered low while operations such as row activation, precharge, autoprecharge or refresh are in progress, but power-down IDD spec will not be applied until finishing those operations.
Note 21. Although CKE is allowed to be registered LOW after a REFRESH command once tREFPDEN(min) is satisfied, there are cases where additional time such as tXPDLL(min) is also required. See “Power-Down clarifications-Case 2”.
Note 22. Defined between end of MPR read burst and MRS which reloads MPR or disables MPR function.
Note 23. One ZQCS command can effectively correct a minimum of 0.5 % (ZQ Correction) of RON and RTT impedance error within 64 nCK for all speed bins assuming the maximum sensitivities specified in the ‘Output Driver Voltage and Temperature Sensitivity’ and ‘ODT Voltage and Temperature Sensitivity’ tables. The appropriate interval between ZQCS commands can be determined from these tables and other application-specific parameters.
One method for calculating the interval between ZQCS commands, given the temperature (Tdriftrate) and voltage (Vdriftrate) drift rates that the SDRAM is subject to in the application, is illustrated. The interval could be defined by the following formula:

chanhvinh.com



$$\frac{ZQCorrection}{(TSens \times Tdriftrate) + (VSens \times Vdriftrate)}$$

Where TSens = max(dRTTdT, dRONdTM) and VSens = max(dRTTdV, dRONdVM) define the SDRAM temperature and voltage sensitivities.
For example, if TSens = 1.5% / °C, VSens = 0.15% / mV, Tdriftrate = 1 °C / sec and Vdriftrate = 15 mV / sec, then the interval between ZQCS commands is calculated as:

$$\frac{0.5}{(1.5 \times 1) + (0.15 \times 15)} = 0.133 \approx 128ms$$

Note 24. n = from 13 cycles to 50 cycles. This row defines 38 parameters.
Note 25. tCH(abs) is the absolute instantaneous clock high pulse width, as measured from one rising edge to the following falling edge.
Note 26. tCL(abs) is the absolute instantaneous clock low pulse width, as measured from one falling edge to the following rising edge.
Note 27. The tIS(base) AC135 specifications are adjusted from the tIS(base) AC160 specification by adding an additional 100ps of derating to accommodate for the lower alternate threshold of 135 mV and another 25 ps to account for the earlier reference point [(160 mv - 135 mV) / 1 V/ns].
Note 28. Pulse width of a input signal is defined as the width between the first crossing of Vref(dc) and the consecutive crossing of Vref(dc).
Note 29. tDQSL describes the instantaneous differential input low pulse width on DQS - DQS#, as measured from one falling edge to the next consecutive rising edge.
Note 30. tDQSH describes the instantaneous differential input high pulse width on DQS - DQS#, as measured from one rising edge to the next consecutive falling edge.
Note 31. tDQSH,act + tDQSL,act = 1 tCK,act ; with tXYZ,act being the actual measured value of the respective timing parameter in the application.
Note 32. tDSH,act + tDSS,act = 1 tCK,act ; with tXYZ,act being the actual measured value of the respective timing parameter in the application.
Note 33. The CL and CWL settings result in tCK requirements. When making a selection of tCK, both CL and CWL requirement settings need to be fulfilled.

chanhvinh.com



### - Multi-Purpose Register (MPR)

The Multi Purpose Register (MPR) function is used to Read out a predefined system timing calibration bit sequence.

**Figure 8. MPR Block Diagram**

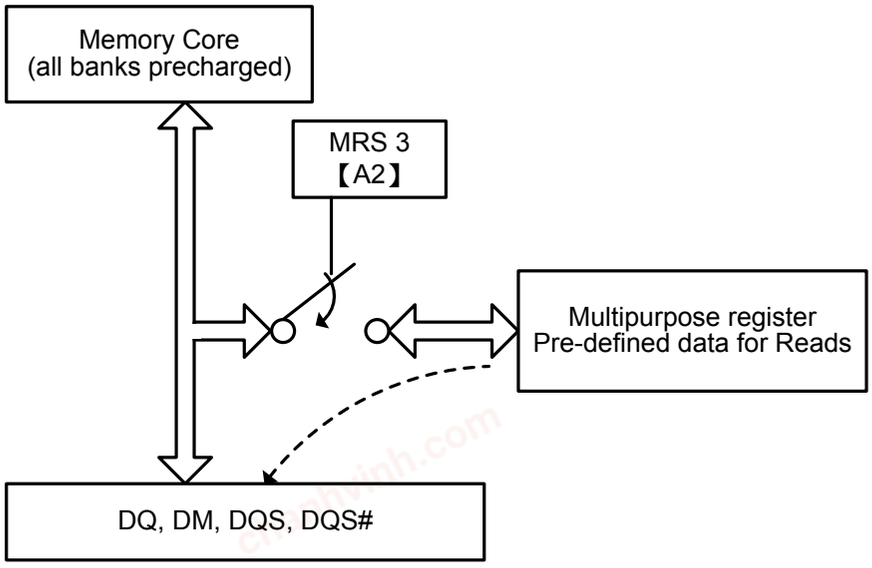


To enable the MPR, a MODE Register Set (MRS) command must be issued to MR3 Register with bit A2 = 1. Prior to issuing the MRS command, all banks must be in the idle state (all banks precharged and tRP met). Once the MPR is enabled, any subsequent RD or RDA commands will be redirected to the Multi Purpose Register. The resulting operation, when a RD or RDA command is issued, is defined by MR3 bits A[1:0] when the MPR is enabled as shown in table 20. When the MPR is enabled, only RD or RDA commands are allowed until a subsequent MRS command is issued with the MPR disabled (MR3 bit A2 = 0). Note that in MPR mode RDA has the same functionality as a READ command which means the auto precharge part of RDA is ignored. Power-Down mode, Self-Refresh and any other non-RD/RDA command is not allowed during MPR enable mode. The RESET function is supported during MPR enable mode.

**Table 20. MPR MR3 Register Definition**

| MR3 A[2] | MR3 A[1:0] | Function |
|---|---|---|
| MPR | MPR-Loc | |
| 0b | Don't care (0b or 1b) | Normal operation, no MPR transaction.<br>All subsequent Reads will come from DRAM array.<br>All subsequent Write will go to DRAM array. |
| 1b | See the table 20 | Enable MPR mode, subsequent RD/RDA commands defined by MR3 A[1:0]. |

chanhvinh.com



## - MPR Functional Description

- One bit wide logical interface via all DQ pins during READ operation.
- Register Read on x8:
- DQ[0] drive information from MPR.
- DQ[7:1] either drive the same information as DQ [0], or they drive 0b.
- Addressing during for Multi Purpose Register reads for all MPR agents:
- BA [2:0]: don't care
- A[1:0]: A[1:0] must be equal to '00'b. Data read burst order in nibble is fixed
- A[2]: For BL=8, A[2] must be equal to 0b, burst order is fixed to [0,1,2,3,4,5,6,7], *) For Burst Chop 4 cases, the burst order is switched on nibble base A [2]=0b, Burst order: 0,1,2,3 *) A[2]=1b, Burst order: 4,5,6,7 *)
- A[9:3]: don't care
- A10/AP: don't care
- A12/BC: Selects burst chop mode on-the-fly, if enabled within MR0.
- A11, A13,… (if available): don't care
- Regular interface functionality during register reads:
- Support two Burst Ordering which are switched with A2 and A[1:0]=00b.
- Support of read burst chop (MRS and on-the-fly via A12/BC)
- All other address bits (remaining column address bits including A10, all bank address bits) will be ignored by the DDR3L SDRAM.
- Regular read latencies and AC timings apply.
- DLL must be locked prior to MPR Reads.

**NOTE:** *) Burst order bit 0 is assigned to LSB and burst order bit 7 is assigned to MSB of the selected MPR agent.

### Table 21. MPR MR3 Register Definition

| MR3 A[2] | MR3 A[1:0] | Function | Burst Length | Read Address A[2:0] | Burst Order and Data Pattern |
|---|---|---|---|---|---|
| 1b | 00b | Read Predefined Pattern for System Calibration | BL8 | 000b | Burst order 0, 1, 2, 3, 4, 5, 6, 7<br>Pre-defined Data Pattern<br>[0, 1, 0, 1, 0, 1, 0, 1] |
| | | | BC4 | 000b | Burst order 0, 1, 2, 3<br>Pre-defined Data Pattern<br>[0, 1, 0, 1] |
| | | | BC4 | 100b | Burst order 4, 5, 6, 7<br>Pre-defined Data Pattern<br>[0, 1, 0, 1] |
| 1b | 01b | RFU | BL8 | 000b | Burst order 0, 1, 2, 3, 4, 5, 6, 7 |
| | | | BC4 | 000b | Burst order 0, 1, 2, 3 |
| | | | BC4 | 100b | Burst order 4, 5, 6, 7 |
| 1b | 10b | RFU | BL8 | 000b | Burst order 0, 1, 2, 3, 4, 5, 6, 7 |
| | | | BC4 | 000b | Burst order 0, 1, 2, 3 |
| | | | BC4 | 100b | Burst order 4, 5, 6, 7 |
| 1b | 11b | RFU | BL8 | 000b | Burst order 0, 1, 2, 3, 4, 5, 6, 7 |
| | | | BC4 | 000b | Burst order 0, 1, 2, 3 |
| | | | BC4 | 100b | Burst order 4, 5, 6, 7 |

## No Operation (NOP) Command

The No operation (NOP) command is used to instruct the selected DDR3L SDRAM to perform a NOP (CS# low and RAS#, CAS# and WE# high). This prevents unwanted commands from being registered during idle or wait states. Operations already in progress are not affected.

## Deselect Command

The Deselect function (CS# HIGH) prevents new commands from being executed by the DDR3L SDRAM. The DDR3L SDRAM is effectively deselected. Operations already in progress are not affected.

chanhvinh.com



## DLL- Off Mode

DDR3L DLL-off mode is entered by setting MR1 bit A0 to “1”; this will disable the DLL for subsequent operations until A0 bit set back to “0”. The MR1 A0 bit for DLL control can be switched either during initialization or later.
The DLL-off Mode operations listed below are an optional feature for DDR3L. The maximum clock frequency for DLL-off Mode is specified by the parameter tCKDLL_OFF. There is no minimum frequency limit besides the need to satisfy the refresh interval, tREFI.
Due to latency counter and timing restrictions, only one value of CAS Latency (CL) in MR0 and CAS Write Latency (CWL) in MR2 are supported. The DLL-off mode is only required to support setting of both CL=6 and CWL=6.
DLL-off mode will affect the Read data Clock to Data Strobe relationship (tDQSCK) but not the data Strobe to Data relationship (tDQSQ, tQH). Special attention is needed to line up Read data to controller time domain. Comparing with DLL-on mode, where tDQSCK starts from the rising clock edge (AL+CL) cycles after the Read command, the DLL-off mode tDQSCK starts (AL+CL-1) cycles after the read command. Another difference is that tDQSCK may not be small compared to tCK (it might even be larger than tCK) and the difference between tDQSCKmin and tDQSCKmax is significantly larger than in DLL-on mode.
The timing relations on DLL-off mode READ operation have shown at the following Timing Diagram (CL=6, BL=8)

### Figure 9. DLL-off mode READ Timing Operation

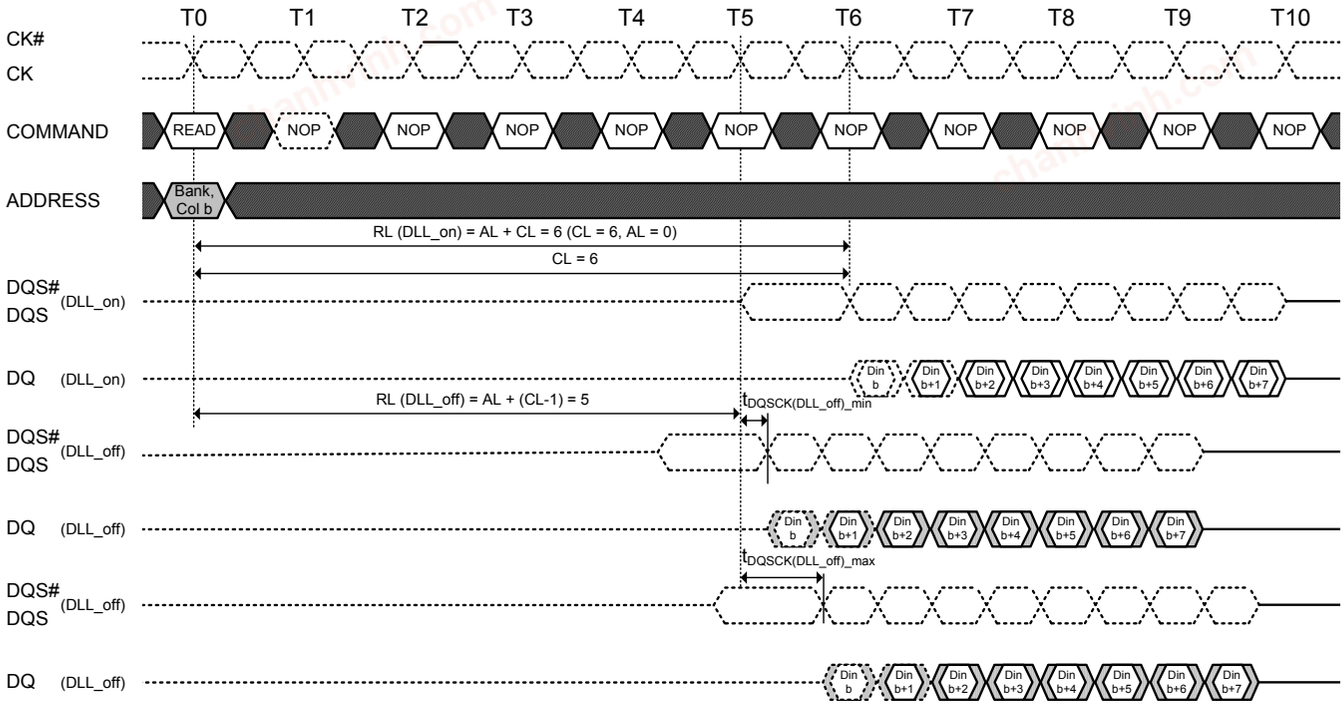


**NOTE 1. The tDQSCK is used here for DQS, DQS# and DQ to have a simplified diagram; the DLL_off shift will affect both timings in the same way and the skew between all DQ and DQS, DQS# signals will still be tDQSQ.**

TRANSITIONING DATA  Don't Care

chanhvinh.com



## DLL on/off switching procedure

DDR3L DLL-off mode is entered by setting MR1 bit A0 to “1”; this will disable the DLL for subsequent operation until A0 bit set back to “0”.

## DLL “on” to DLL “off” Procedure

To switch from DLL “on” to DLL “off” requires the frequency to be changed during Self-Refresh outlined in the following procedure:

1. Starting from Idle state (all banks pre-charged, all timing fulfilled, and DRAMs On-die Termination resistors, RTT, must be in high impedance state before MRS to MR1 to disable the DLL).
2. Set MR1 Bit A0 to “1” to disable the DLL.
3. Wait tMOD.
4. Enter Self Refresh Mode; wait until (tCKSRE) satisfied.
5. Change frequency, in guidance with “Input Clock Frequency Change” section.
6. Wait until a stable clock is available for at least (tCKSRX) at DRAM inputs.
7. Starting with the Self Refresh Exit command, CKE must continuously be registered HIGH until all tMOD timings from any MRS command are satisfied. In addition, if any ODT features were enabled in the mode registers when Self Refresh mode was entered, the ODT signal must continuously be registered LOW until all tMOD timings from any MRS command are satisfied. If both ODT features were disabled in the mode registers when Self Refresh mode was entered, ODT signal can be registered LOW or HIGH.
8. Wait tXS, and then set Mode Registers with appropriate values (especially an update of CL, CWL, and WR may be necessary. A ZQCL command may also be issued after tXS).
9. Wait for tMOD, and then DRAM is ready for next command.

## Figure 10. DLL Switch Sequence from DLL-on to DLL-off

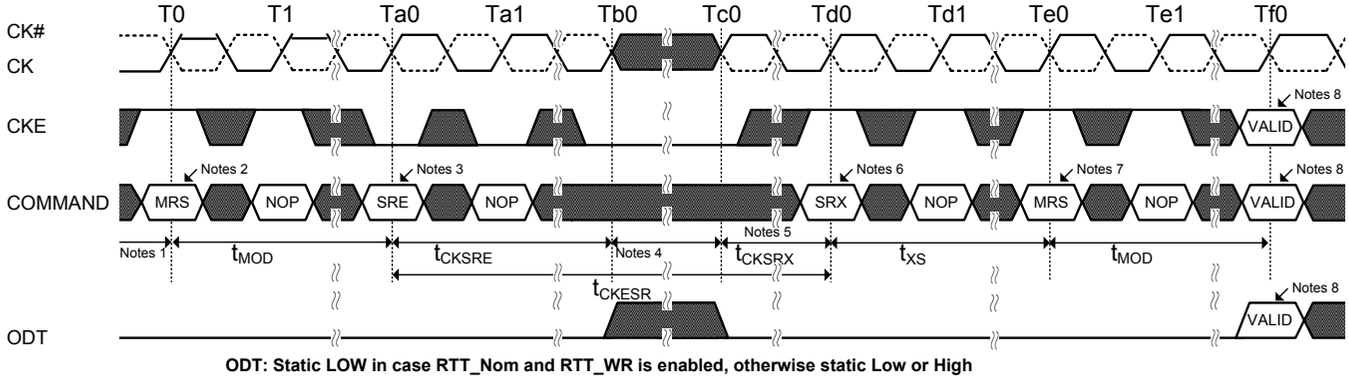


**ODT: Static LOW in case RTT_Nom and RTT_WR is enabled, otherwise static Low or High**

**NOTES:**
**1. Starting with Idle State, RTT in Hi-Z state**
**2. Disable DLL by setting MR1 Bit A0 to 1**
**3. Enter SR**
**4. Change Frequency**
**5. Clock must be stable tCKSRX**
**6. Exit SR**
**7. Update Mode registers with DLL off parameters setting**
**8. Any valid command**

**TIME BREAK** **Don't Care**

chanhvinh.com



## DLL “off” to DLL “on” Procedure

To switch from DLL “off” to DLL “on” (with requires frequency change) during Self-Refresh:

1. Starting from Idle state (all banks pre-charged, all timings fulfilled and DRAMs On-die Termination resistors (RTT) must be in high impedance state before Self-Refresh mode is entered).
2. Enter Self Refresh Mode, wait until tCKSRE satisfied.
3. Change frequency, in guidance with “Input clock frequency change” section.
4. Wait until a stable clock is available for at least (tCKSRX) at DRAM inputs.
5. Starting with the Self Refresh Exit command, CKE must continuously be registered HIGH until tDLLK timing from subsequent DLL Reset command is satisfied. In addition, if any ODT features were enabled in the mode registers when Self Refresh mode was entered, the ODT signal must continuously be registered LOW until tDLLK timings from subsequent DLL Reset command is satisfied. If both ODT features are disabled in the mode registers when Self Refresh mode was entered, ODT signal can be registered LOW or HIGH.
6. Wait tXS, then set MR1 Bit A0 to “0” to enable the DLL.
7. Wait tMRD, then set MR0 Bit A8 to “1” to start DLL Reset.
8. Wait tMRD, then set Mode registers with appropriate values (especially an update of CL, CWL, and WR may be necessary. After tMOD satisfied from any proceeding MRS command, a ZQCL command may also be issued during or after tDLLK).
9. Wait for tMOD, then DRAM is ready for next command (remember to wait tDLLK after DLL Reset before applying command requiring a locked DLL!). In addition, wait also for tZQoper in case a ZQCL command was issued.

## Figure 11. DLL Switch Sequence from DLL-off to DLL on

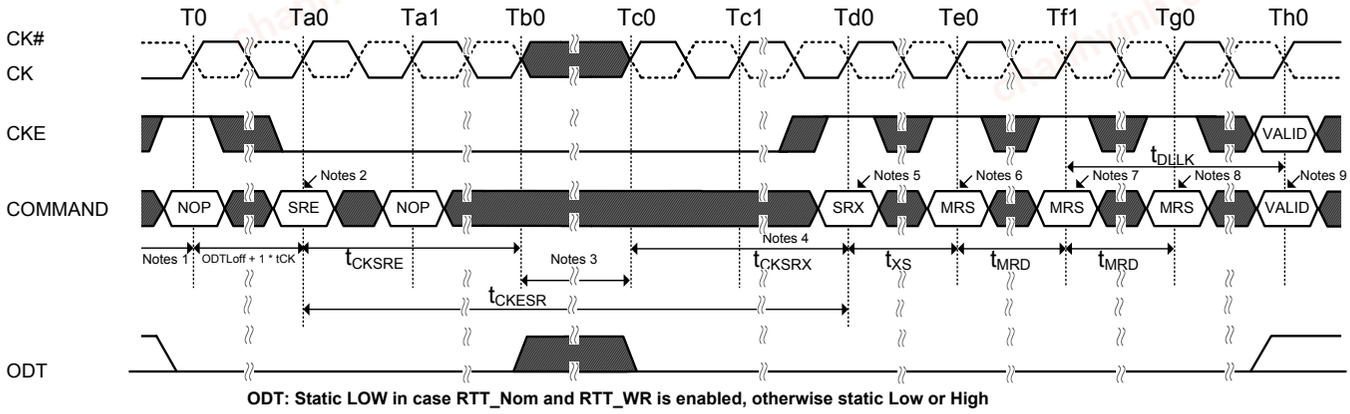


**ODT: Static LOW in case RTT_Nom and RTT_WR is enabled, otherwise static Low or High**

**TIME BREAK** **Don't Care**

**NOTES:**
1. **Starting with Idle State**
2. **Enter SR**
3. **Change Frequency**
4. **Clock must be stable tCKSRX**
5. **Exit SR**
6. **Set DLL on by MR1 A0 = 0**
7. **Start DLL Reset by MR0 A8=1**
8. **Update Mode registers**
9. **Any valid command**

chanhvinh.com



## Jitter Notes

Note 1. Unit 'tCK(avg)' represents the actual tCK(avg) of the input clock under operation. Unit 'nCK' represents one clock cycle of the input clock, counting the actual clock edges.ex) tMRD = 4 [nCK] means; if one Mode Register Set command is registered at Tm, another Mode Register Set command may be registered at Tm+4, even if (Tm+4 - Tm) is 4 x tCK(avg) + tERR(4per),min.

Note 2. These parameters are measured from a command/address signal (CKE, CS#, RAS#, CAS#, WE#, ODT, BA0, A0, A1, etc.) transition edge to its respective clock signal (CK/CK#) crossing. The spec values are not affected by the amount of clock jitter applied (i.e. tJIT(per), tJIT(cc), etc.), as the setup and hold are relative to the clock signal crossing that latches the command/address. That is, these parameters should be met whether clock jitter is present or not.

Note 3. These parameters are measured from a data strobe signal (DQS, DQS#) crossing to its respective clock signal (CK, CK#) crossing. The spec values are not affected by the amount of clock jitter applied (i.e. tJIT(per), tJIT(cc), etc.), as these are relative to the clock signal crossing. That is, these parameters should be met whether clock jitter is present or not.

Note 4. These parameters are measured from a data signal (DM, DQ0, DQ1, etc.) transition edge to its respective data strobe signal (DQS, DQS#) crossing.

Note 5. For these parameters, the DDR3L SDRAM device supports tnPARAM [nCK] = RU{ tPARAM [ns] / tCK(avg) [ns] }, which is in clock cycles, assuming all input clock jitter specifications are satisfied.

Note 6. When the device is operated with input clock jitter, this parameter needs to be derated by the actual tERR(mper),act of the input clock, where 2 <= m <= 12. (output deratings are relative to the SDRAM input clock.)

Note 7. When the device is operated with input clock jitter, this parameter needs to be derated by the actual tJIT(per),act of the input clock. (output deratings are relative to the SDRAM input clock.)

### Table 22. Input clock jitter spec parameter

| Parameter | Symbol | -12 | | Unit |
|---|---|---|---|---|
| | | Min. | Max. | |
| Clock period jitter | $t_{JIT}$ (per) | -70 | 70 | ps |
| Clock period jitter during DLL locking period | $t_{JIT}$ (per,lck) | -60 | 60 | ps |
| Cycle to cycle clock period jitter | $t_{JIT}$ (cc) | 140 | | ps |
| Cycle to cycle clock period jitter during DLL locking period | $t_{JIT}$ (cc,lck) | 120 | | ps |
| Cumulative error across 2 cycles | $t_{ERR}$ (2per) | -103 | 103 | ps |
| Cumulative error across 3 cycles | $t_{ERR}$ (3per) | -122 | 122 | ps |
| Cumulative error across 4 cycles | $t_{ERR}$ (4per) | -136 | 136 | ps |
| Cumulative error across 5 cycles | $t_{ERR}$ (5per) | -147 | 147 | ps |
| Cumulative error across 6 cycles | $t_{ERR}$ (6per) | -155 | 155 | ps |
| Cumulative error across 7 cycles | $t_{ERR}$ (7per) | -163 | 163 | ps |
| Cumulative error across 8 cycles | $t_{ERR}$ (8per) | -169 | 169 | ps |
| Cumulative error across 9 cycles | $t_{ERR}$ (9per) | -175 | 175 | ps |
| Cumulative error across 10 cycles | $t_{ERR}$ (10per) | -180 | 180 | ps |
| Cumulative error across 11 cycles | $t_{ERR}$ (11per) | -184 | 184 | ps |
| Cumulative error across 12 cycles | $t_{ERR}$ (12per) | -188 | 188 | ps |
| Cumulative error across n cycles, n=13...50, inclusive | $t_{ERR}$ (nper) | $t_{ERR}(nper)_{min} = (1+0.68ln(n)) * t_{JIT}(per)_{min}$<br>$t_{ERR}(nper)_{max} = (1+0.68ln(n)) * t_{JIT}(per)_{max}$ | | ps |

chanhvinh.com



## Input Clock frequency change

Once the DDR3L SDRAM is initialized, the DDR3L SDRAM requires the clock to be “stable” during almost all states of normal operation. This means once the clock frequency has been set and is to be in the “stable state”, the clock period is not allowed to deviate except for what is allowed for by the clock jitter and SSC (spread spectrum clocking) specification.

The input clock frequency can be changed from one stable clock rate to another stable clock rate under two conditions: (1) Self-Refresh mode and (2) Precharge Power-Down mode. Outside of these two modes, it is illegal to change the clock frequency.

For the first condition, once the DDR3L SDRAM has been successfully placed in to Self-Refresh mode and tCKSRE has been satisfied, the state of the clock becomes a don’t care. Once a don’t care, changing the clock frequency is permissible, provided the new clock frequency is stable prior to tCKSRX. When entering and exiting Self-Refresh mode of the sole purpose of changing the clock frequency, the Self-Refresh entry and exit specifications must still be met. The DDR3L SDRAM input clock frequency is allowed to change only within the minimum and maximum operating frequency specified for the particular speed grade.

The second condition is when the DDR3L SDRAM is in Precharge Power-Down mode (either fast exit mode or slow exit mode). If the RTT_Nom feature was enabled in the mode register prior to entering Precharge power down mode, the ODT signal must continuously be registered LOW ensuring RTT is in an off state. If the RTT_Nom feature was disabled in the mode register prior to entering Precharge power down mode, RTT will remain in the off state. The ODT signal can be registered either LOW or HIGH in this case. A minimum of tCKSRE must occur after CKE goes LOW before the clock frequency may change. The DDR3L SDRAM input clock frequency is allowed to change only within the minimum and maximum operating frequency specified for the particular speed grade. During the input clock frequency change, ODT and CKE must be held at stable LOW levels. Once the input clock frequency is changed, stable new clocks must be provided to the DRAM tCKSRX before precharge Power Down may be exited; after Precharge Power Down is exited and tXP has expired, the DLL must be RESET via MRS. Depending on the new clock frequency additional MRS commands may need to be issued to appropriately set the WR, CL, and CWL with CKE continuously registered high. During DLL re-lock period, ODT must remain LOW and CKE must remain HIGH. After the DLL lock time, the DRAM is ready to operate with new clock frequency.

### Figure 12. Change Frequency during Precharge Power-down

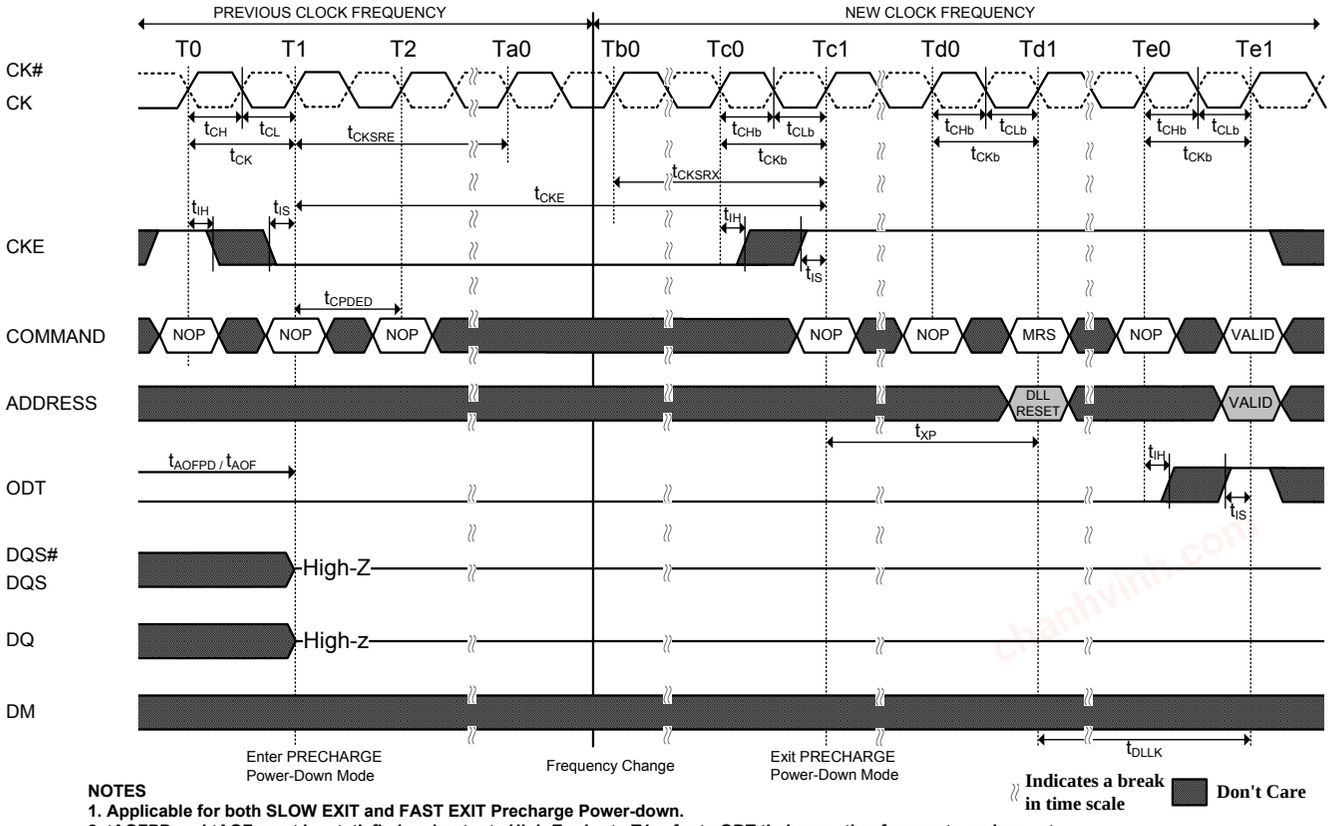


**NOTES**

**1. Applicable for both SLOW EXIT and FAST EXIT Precharge Power-down.**

**2. tAOFPD and tAOF must be statisfied and outputs High-Z prior to T1;refer to ODT timing section for exact requirements**

**3. If the RTT_NOM feature was enabled in the mode register prior to entering Precharge power down mode, the ODT signal must continuously be registered LOW ensuring RTT is in an off state, as shown in Figure 9. If the RTT_NOM feature was disabled in the mode register prior to entering Precharge power down mode, RTT will remain in the off state. The ODT signal can be registered either LOW or HIGH in this case.**

chanhvinh.com



## Write Leveling

For better signal integrity, DDR3L memory adopted fly by topology for the commands, addresses, control signals, and clocks. The fly by topology has benefits from reducing number of stubs and their length but in other aspect, causes flight time skew between clock and strobe at every DRAM on DIMM. It makes it difficult for the Controller to maintain tDQSS, tDSS, and tDSH specification. Therefore, the controller should support “write leveling” in DDR3L SDRAM to compensate the skew.

The memory controller can use the “write leveling” feature and feedback from the DDR3L SDRAM to adjust the DQS – DQS# to CK – CK# relationship. The memory controller involved in the leveling must have adjustable delay setting on DQS – DQS# to align the rising edge of DQS – DQS# with that of the clock at the DRAM pin. DRAM asynchronously feeds back CK – CK#, sampled with the rising edge of DQS – DQS#, through the DQ bus. The controller repeatedly delays DQS – DQS# until a transition from 0 to 1 is detected. The DQS – DQS# delay established though this exercise would ensure tDQSS specification.

Besides tDQSS, tDSS, and tDSH specification also needs to be fulfilled. One way to achieve this is to combine the actual tDQSS in the application with an appropriate duty cycle and jitter on the DQS- DQS# signals. Depending on the actual tDQSS in the application, the actual values for tDQSL and tDQSH may have to be better than the absolute limits provided in “AC Timing Parameters” section in order to satisfy tDSS and tDSH specification.

DQS/DQS# driven by the controller during leveling mode must be determined by the DRAM based on ranks populated. Similarly, the DQ bus driven by the DRAM must also be terminated at the controller.

One or more data bits should carry the leveling feedback to the controller across the DRAM configurations x8. Therefore, a separate feedback mechanism should be available for each byte lane.

### Figure 13. Write Leveling Concept

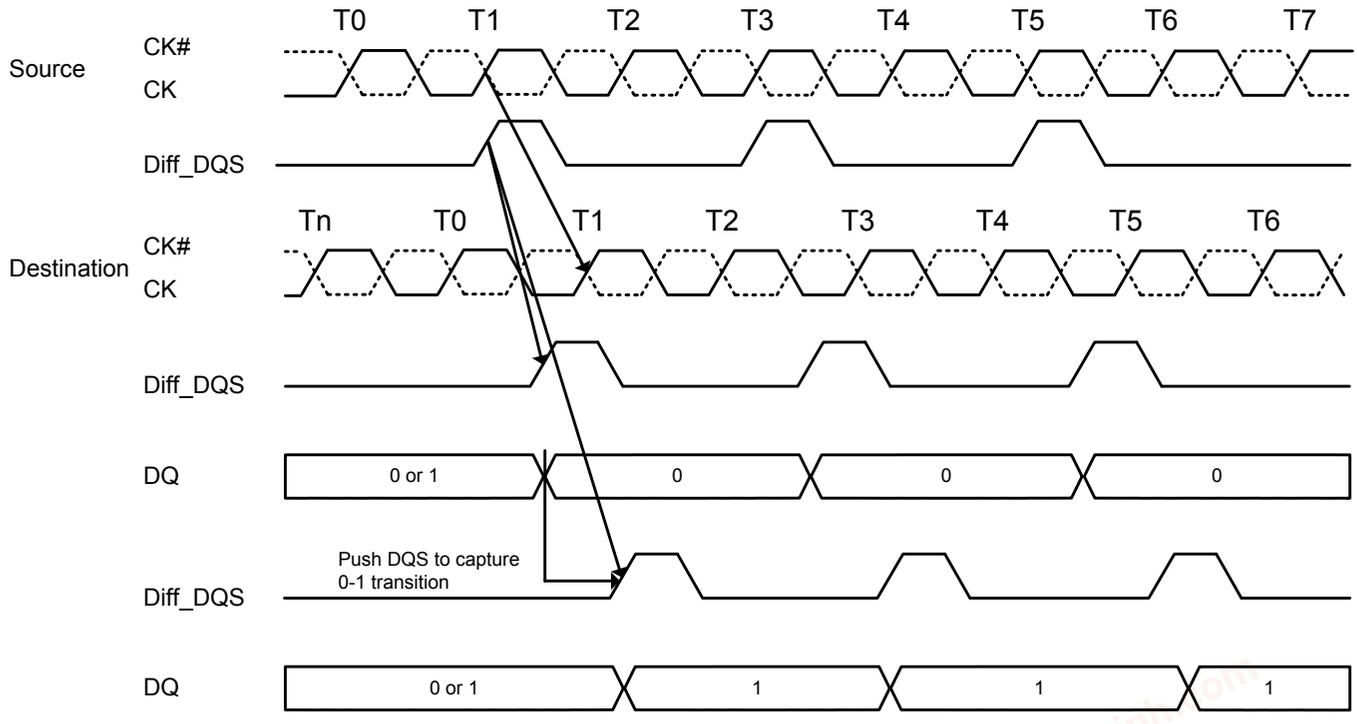

chanhvinh.com



## DRAM setting for write leveling and DRAM termination function in that mode

DRAM enters into Write leveling mode if A7 in MR1 set “High” and after finishing leveling, DRAM exits from write leveling mode if A7 in MR1 set “Low”. Note that in write leveling mode, only DQS/DQS# terminations are activated and deactivated via ODT pin not like normal operation.

### Table 23. DRAM termination function in the leveling mode

| ODT pin at DRAM | DQS, DQS# termination | DQs termination |
|---|---|---|
| De-asserted | off | off |
| Asserted | on | off |

**Note 1:** In write leveling mode with its output buffer disabled (MR1[bit7]=1 with MR1[bit12]=1) all RTT_Nom settings are allowed; in Write Leveling Mode with its output buffer enabled (MR1[bit7]=1 with MR1[bit12]=0) only RTT_Nom settings of RZQ/2, RZQ/4, and RZQ/6 are allowed.

## Procedure Description

Memory controller initiates Leveling mode of all DRAMs by setting bit 7 of MR1 to 1. With entering write leveling mode, the DQ pins are in undefined driving mode. During write leveling mode, only NOP or Deselect commands are allowed. As well as an MRS command to exit write leveling mode. Since the controller levels one rank at a time, the output of other rank must be disabled by setting MR1 bit A12 to 1. Controller may assert ODT after tMOD, time at which DRAM is ready to accept the ODT signal.

Controller may drive DQS low and DQS# high after a delay of tWLDQSEN, at which time DRAM has applied on-die termination on these signals. After tDQSL and tWLMRD controller provides a single DQS, DQS# edge which is used by the DRAM to sample CK – CK# driven from controller. tWLMRD(max) timing is controller dependent.

DRAM samples CK – CK# status with rising edge of DQS and provides feedback on all the DQ bits asynchronously after tWLO timing. There is a DQ output uncertainty of tWLOE defined to allow mismatch on DQ bits; there are no read strobes (DQS/DQS#) needed for these DQs. Controller samples incoming DQ and decides to increment or decrement DQS – DQS# delay setting and launches the next DQS/DQS# pulse after some time, which is controller dependent. Once a 0 to 1 transition is detected, the controller locks DQS – DQS# delay setting and write leveling is achieved for the device.

### Figure 14. Timing details of Write Leveling sequence

**(DQS – DQS# is capturing CK – CK# low at T1 and CK – CK# high at T2)**

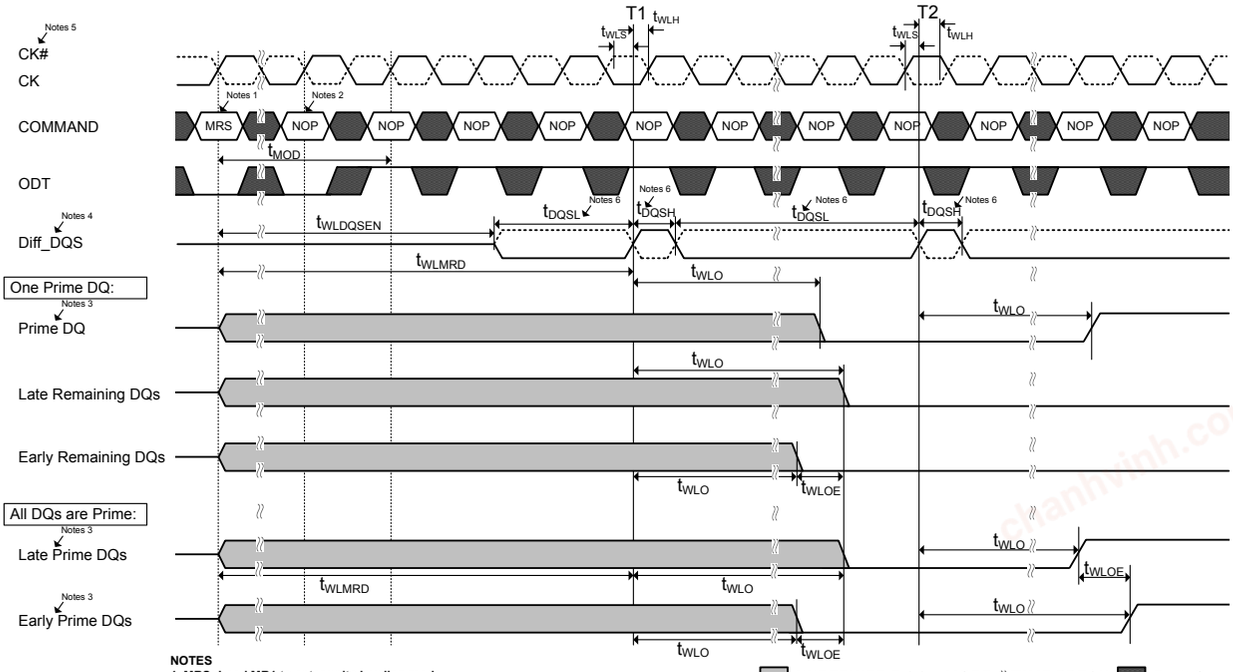


**NOTES**

1. MRS: Load MR1 to enter write leveling mode.
2. NOP: NOP or Deselect.
3. DRAM has the option to drive leveling feedback on a prime DQ or all DQs. If feedback is driven only on one DQ, the remaining DQs must be driven low, as shown in above Figure, and maintained at this state through out the leveling procedure.
4. diff_DQS is the differential data strobe (DQS, DQS#). Timing reference points are the zero crossings. DQS is shown with solid line, DQS# is shown with dotted line.
5. CK, CK# : CK is shown with solid dark line, where as CK# is drawn with dotted line.
6. DQS, DQS# needs to fulfill minimum pulse width requirements tDQSH(min) and tDQSL(min) as defined for regular Writes; the max pulse width is system dependent.

chanhvinh.com



## Write Leveling Mode Exit

The following sequence describes how Write Leveling Mode should be exited:

1. After the last rising strobe edge (see ~T0), stop driving the strobe signals (see ~Tc0). Note: From now on, DQ pins are in undefined driving mode, and will remain undefined, until tMOD after the respective MR command (Te1).
2. Drive ODT pin low (tIS must be satisfied) and keep it low (see Tb0).
3. After the RTT is switched off, disable Write Level Mode via MRS command (see Tc2).
4. After tMOD is satisfied (Te1), any valid command may be registered. (MR commands may be issued after tMRD (Td1).

## Figure 15. Timing details of Write Leveling exit

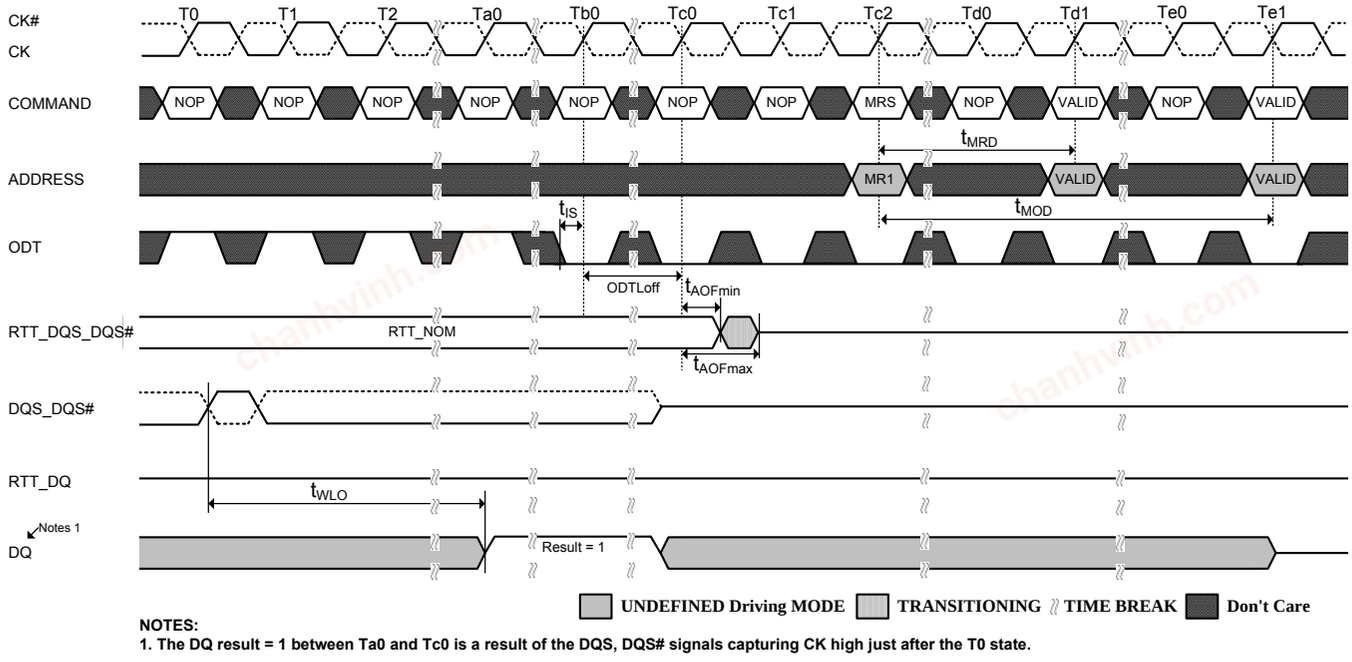


NOTES:
1. The DQ result = 1 between Ta0 and Tc0 is a result of the DQS, DQS# signals capturing CK high just after the T0 state.

## ACTIVE Command

The ACTIVE command is used to open (or activate) a row in a particular bank for subsequent access. The value on the BA0-BA2 inputs selects the bank, and the addresses provided on inputs A0-A13 selects the row. These rows remain active (or open) for accesses until a precharge command is issued to that bank. A PRECHARGE command must be issued before opening a different row in the same bank.

## PRECHARGE Command

The PRECHARGE command is used to deactivate the open row in a particular bank or the open row in all banks. The bank(s) will be available for a subsequent row activation a specified time (tRP) after the PRECHARGE command is issued, except in the case of concurrent auto precharge, where a READ or WRITE command to a different bank is allowed as long as it does not interrupt the data transfer in the current bank and does not violate any other timing parameters. Once a bank has been precharged, it is in the idle state and must be activated prior to any READ or WRITE commands being issued to that bank. A PRECHARGE command is allowed if there is no open row in that bank (idle bank) or if the previously open row is already in the process of precharging. However, the precharge period will be determined by the last PRECHARGE command issued to the bank.

chanhvinh.com



## READ Operation

## Read Burst Operation

During a READ or WRITE command DDR3L will support BC4 and BL8 on the fly using address A12 during the READ or WRITE (AUTO PRECHARGE can be enabled or disabled).

A12=0, BC4 (BC4 = burst chop, tCCD=4)

A12=1, BL8

A12 will be used only for burst length control, not a column address.

### Figure 16. READ Burst Operation RL=5 (AL=0, CL=5, BL=8)

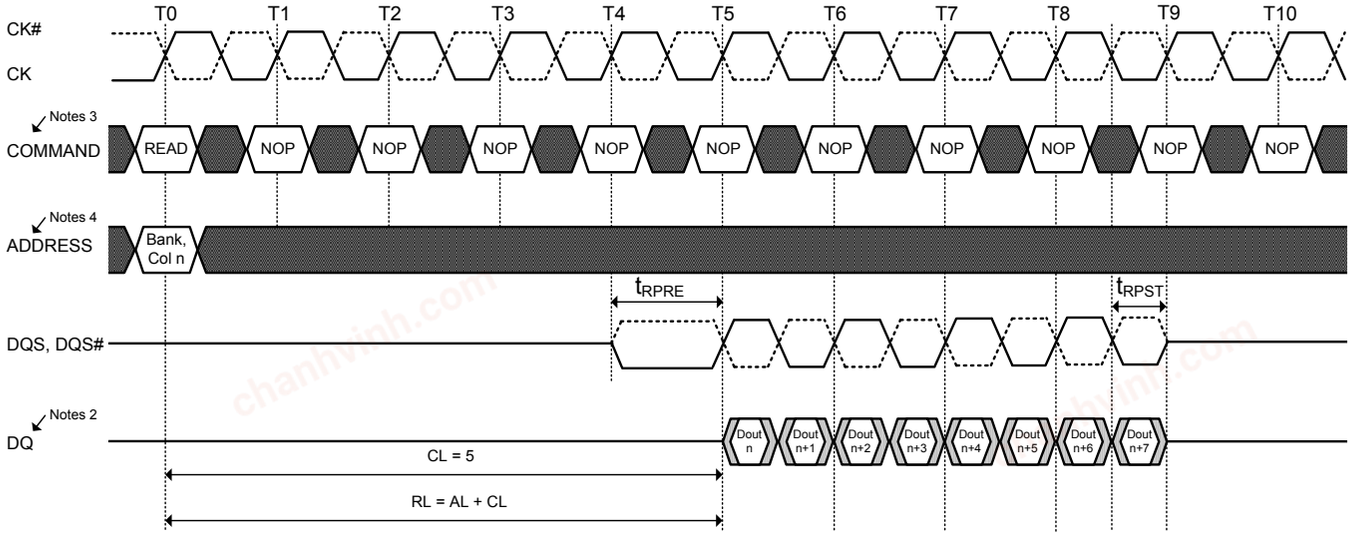


**NOTES:**
1. BL8, RL = 5, AL = 0, CL = 5.
2. Dout n = data-out from column n.
3. NOP commands are shown for ease of illustration; other commands may be valid at these times.
4. BL8 setting activated by either MR0[A1:0 = 00] or MR0[A1:0 = 01] and A12 = 1 during READ command at T0.

TRANSITIONING DATA  Don't Care

### Figure 17. READ Burst Operation RL=9 (AL=4, CL=5, BL=8)

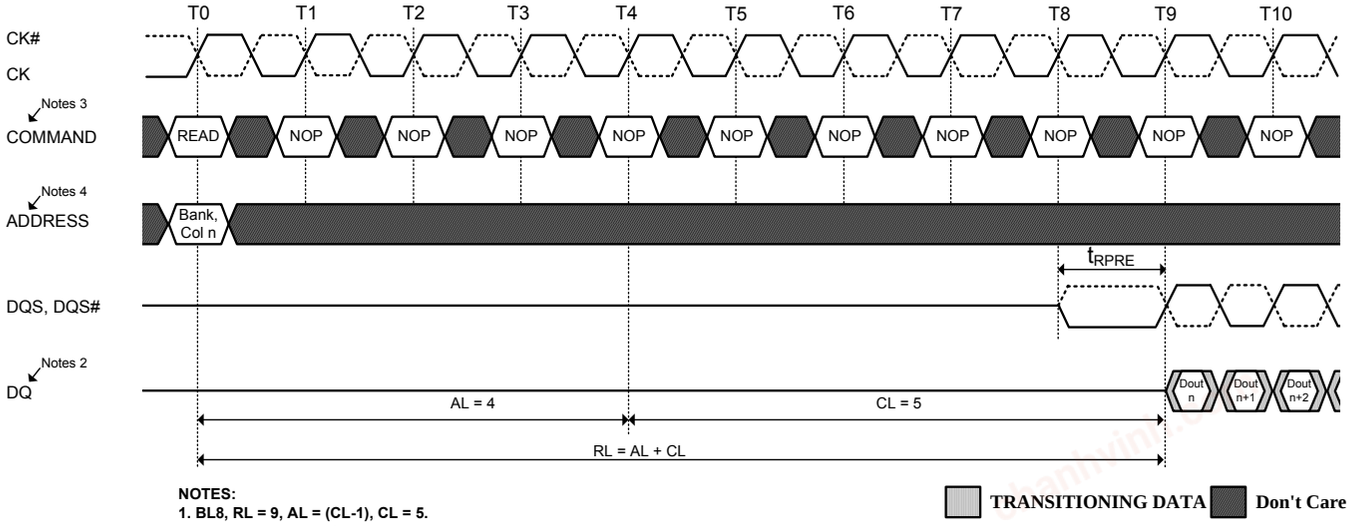


**NOTES:**
1. BL8, RL = 9, AL = (CL-1), CL = 5.
2. Dout n = data-out from column n.
3. NOP commands are shown for ease of illustration; other commands may be valid at these times.
4. BL8 setting activated by either MR0[A1:0 = 00] or MR0[A1:0 = 01] and A12 = 1 during READ command at T0.

TRANSITIONING DATA  Don't Care

chanhvinh.com



## READ Timing Definitions

Read timing is shown in the following figure and is applied when the DLL is enabled and locked.

Rising data strobe edge parameters:

tDQSCK min/max describes the allowed range for a rising data strobe edge relative to CK, CK#. tDQSCK is the actual position of a rising strobe edge relative to CK, CK#. tQSH describes the DQS, DQS# differential output high time. tDQSQ describes the latest valid transition of the associated DQ pins. tQH describes the earliest invalid transition of the associated DQ pins.

Falling data strobe edge parameters:

tQSL describes the DQS, DQS# differential output low time. tDQSQ describes the latest valid transition of the associated DQ pins. tQH describes the earliest invalid transition of the associated DQ pins.

tDQSQ; both rising/falling edges of DQS, no tAC defined.

**Figure 18. READ timing Definition**

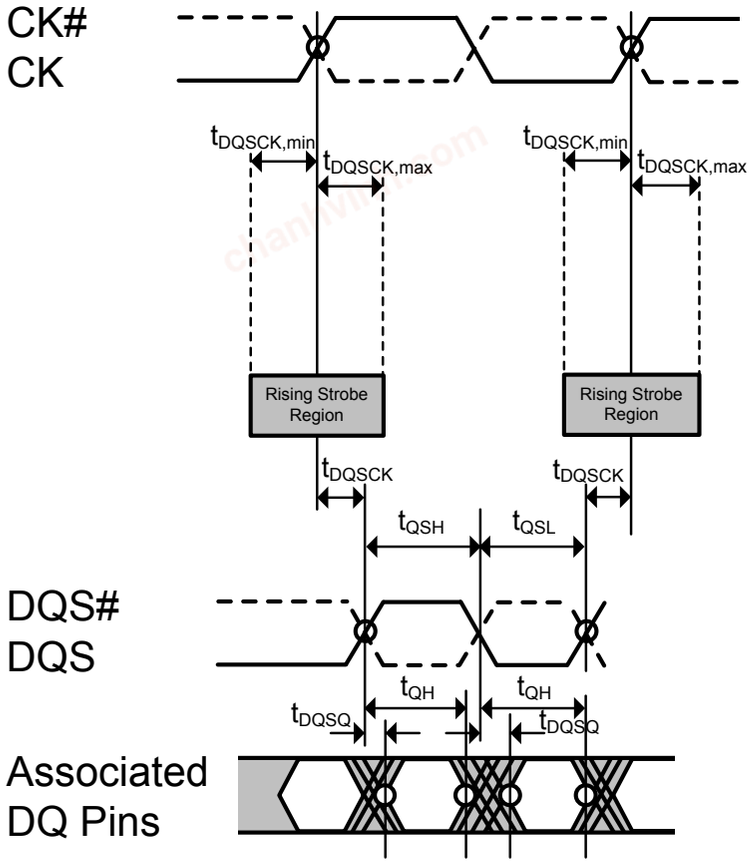

chanhvinh.com



## Read Timing; Clock to Data Strobe relationship

Clock to Data Strobe relationship is shown in the following figure and is applied when the DLL is enabled and locked.

Rising data strobe edge parameters:

tDQSCK min/max describes the allowed range for a rising data strobe edge relative to CK and CK#. tDQSCK is the actual position of a rising strobe edge relative to CK and CK#. tQSH describes the data strobe high pulse width.

Falling data strobe edge parameters:

tQSL describes the data strobe low pulse width.

## Figure 19. Clock to Data Strobe relationship

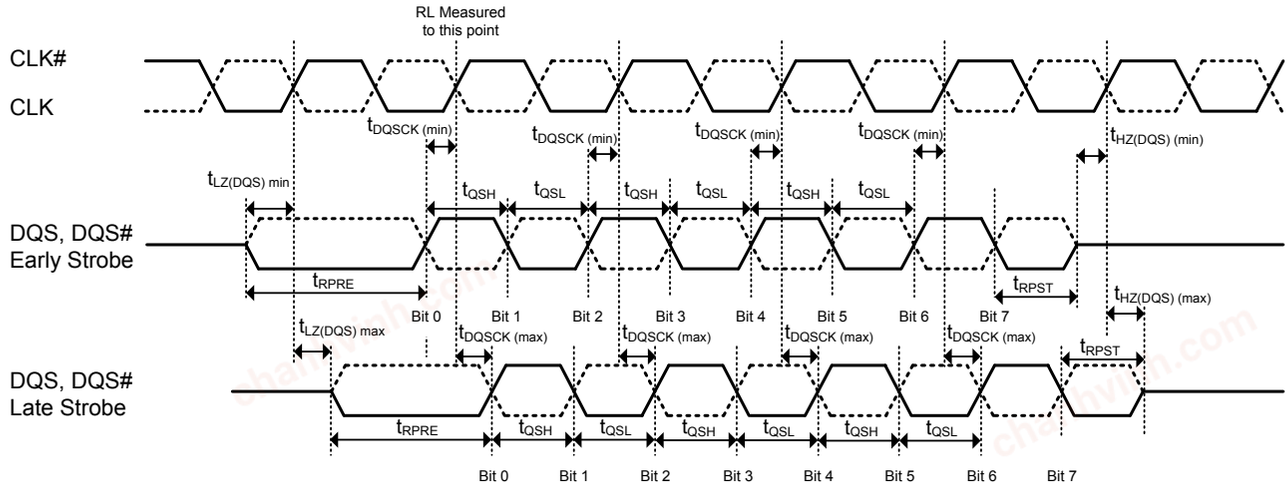


**NOTES:**

**1. Within a burst, rising strobe edge is not necessarily fixed to be always at tDQSCK(min) or tDQSCK(max). Instead, rising strobe edge can vary between tDQSCK(min) and tDQSCK(max).**

**2. Notwithstanding note 1, a rising strobe edge with tDQSCK(max) at T(n) can not be immediately followed by a rising strobe edge with tDQSCK(min) at T(n+1). This is because other timing relationships (tQSH, tQSL) exist: if tDQSCK(n+1) < 0: tDQSCK(n) < 1.0 tCK - (tQSHmin + tQSLmin) - | tDQSCK(n+1) |**

**3. The DQS, DQS# differential output high time is defined by tQSH and the DQS, DQS# differential output low time is defined by tQSL.**

**4. Likewise, tLZ(DQS)min and tHZ(DQS)min are not tied to tDQSCKmin (early strobe case) and tLZ(DQS)max and tHZ(DQS)max are not tied to tDQSCKmax (late strobe case).**

**5. The minimum pulse width of read preamble is defined by tRPRE(min).**

**6. The maximum read postamble is bound by tDQSCK(min) plus tQSH(min) on the left side and tHZDSQ(max) on the right side.**

**7. The minimum pulse width of read postamble is defined by tRPST(min).**

**8. The maximum read preamble is bound by tLZDQS(min) on the left side and tDQSCK(max) on the right side.**

chanhvinh.com



## Read Timing; Data Strobe to Data Relationship

The Data Strobe to Data relationship is shown in the following figure and is applied when the DLL and enabled and locked.

Rising data strobe edge parameters:

- tDQSQ describes the latest valid transition of the associated DQ pins.
- tQH describes the earliest invalid transition of the associated DQ pins.

Falling data strobe edge parameters:

- tDQSQ describes the latest valid transition of the associated DQ pins.
- tQH describes the earliest invalid transition of the associated DQ pins.
- tDQSQ; both rising/falling edges of DQS, no tAC defined

tDQSQ; both rising/falling edges of DQS, no tAC defined

## Figure 20. Data Strobe to Data Relationship

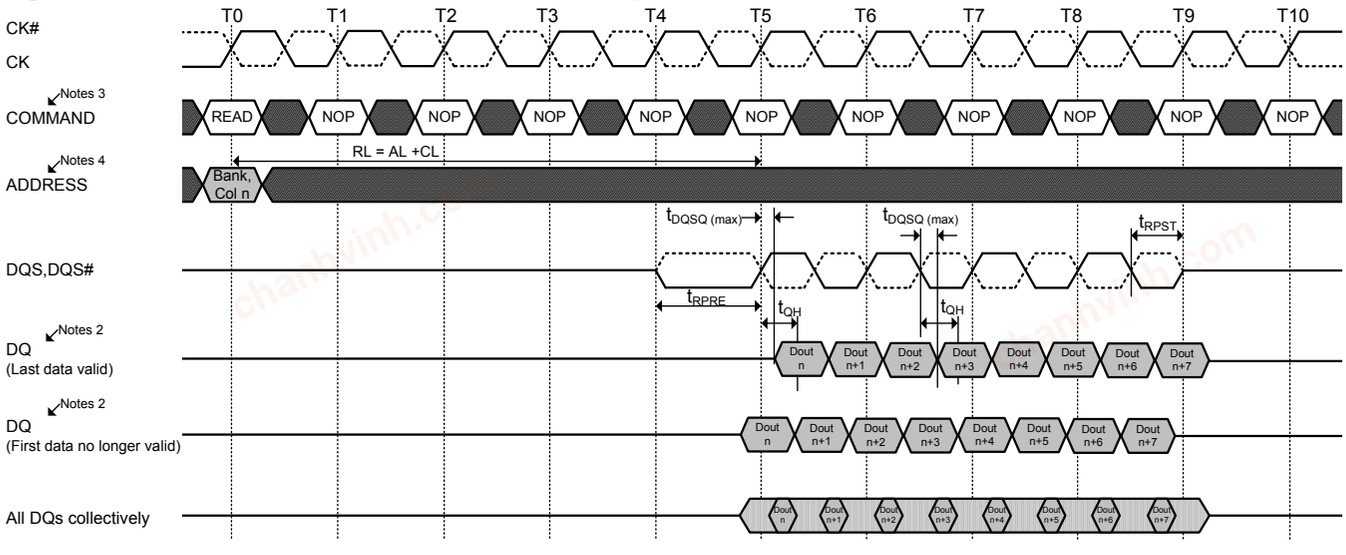


**NOTES:**

1. BL = 8, RL = 5 (AL = 0, CL = 5)
2. DOUT n = data-out from column n.
3. NOP commands are shown for ease of illustration; other commands may be valid at these times.
4. BL8 setting activated by either MR0[A1:0 = 00] or MR0[A1:0 = 01] and A12 = 1 during READ command at T0.
5. Output timings are referenced to VDDQ/2, and DLL on for locking.
6. tDQSQ defines the skew between DQS,DQS# to Data and does not define DQS,DQS# to Clock.
7. Early Data transitions may not always happen at the same DQ. Data transitions of a DQ can vary (either early or late) within a burst.

chanhvinh.com



## Write Operation

## DDR3L Burst Operation

During a READ or WRITE command, DDR3L will support BC4 and BL8 on the fly using address A12 during the READ or WRITE (Auto Precharge can be enabled or disabled).

A12=0, BC4 (BC4 = Burst Chop, tCCD=4)
A12=1, BL8
A12 is used only for burst length control, not as a column address.

## WRITE Timing Violations

Generally, if timing parameters are violated, a complete reset/initialization procedure has to be initiated to make sure the DRAM works properly. However, it is desirable for certain minor violations that the DRAM is guaranteed not to "hang up" and errors be limited to that particular operation.
For the following, it will be assumed that there are no timing violations with regard to the Write command itself (including ODT, etc.) and that it does satisfy all timing requirements not mentioned below.

## Data Setup and Hold Violations

Should the strobe timing requirements (tDS, tDH) be violated, for any of the strobe edges associated with a write burst, then wrong data might be written to the memory location addressed with the offending WRITE command. Subsequent reads from that location might result in unpredictable read data, however, the DRAM will work properly otherwise.

## Strobe to Strobe and Strobe to Clock Violations

Should the strobe timing requirements (tDQSH, tDQSL, tWPRE, tWPST) or the strobe to clock timing requirements (tDSS, tDSH, tDQSS) be violated, for any of the strobe edges associated with a Write burst, then wrong data might be written to the memory location addressed with the offending WRITE command. Subsequent reads from that location might result in unpredictable read data, however the DRAM will work properly otherwise.

## Write Timing Parameters

This drawing is for example only to enumerate the strobe edges that "belong" to a write burst. No actual timing violations are shown here. For a valid burst all timing parameters for each edge of a burst need to be satisfied (not only for one edge).

## Refresh Command

The Refresh command (REF) is used during normal operation of the DDR3L SDRAMs. This command is not persistent, so it must be issued each time a refresh is required. The DDR3L SDRAM requires Refresh cycles at an average periodic interval of tREFI. When CS#, RAS#, and CAS# are held Low and WE# High at the rising edge of the clock, the chip enters a Refresh cycle. All banks of the SDRAM must be precharged and idle for a minimum of the precharge time tRP(min) before the Refresh Command can be applied. The refresh addressing is generated by the internal refresh controller. This makes the address bits "Don't Care" during a Refresh command. An internal address counter suppliers the address during the refresh cycle. No control of the external address bus is required once this cycle has started. When the refresh cycle has completed, all banks of the SDRAM will be in the precharged (idle) state. A delay between the Refresh Command and the next valid command, except NOP or DES, must be greater than or equal to the minimum Refresh cycle time tRFC(min).
In general, a Refresh command needs to be issued to the DDR3L SDRAM regularly every tREFI interval. To allow for improved efficiency in scheduling and switching between tasks, some flexibility in the absolute refresh interval is provided. A maximum of 8 Refresh commands can be postponed during operation of the DDR3L SDRAM, meaning that at no point in time more than a total of 8 Refresh commands are allowed to be postponed. In case that 8 Refresh commands are postponed in a row, the resulting maximum interval between the surrounding Refresh commands is limited to 9 x tREFI. A maximum of 8 additional Refresh commands can be issued in advance ("pulled in"), with each one reducing the number of regular Refresh commands required later by one. Note that pulling in more than 8 Refresh commands in advance does not further reduce the number of regular Refresh commands required later, so that the resulting maximum interval between two surrounding Refresh command is limited to 9 x tREFI. Before entering Self-Refresh Mode, all postponed Refresh commands must be executed.

chanhvinh.com



## Self-Refresh Operation

The Self-Refresh command can be used to retain data in the DDR3L SDRAM, even if the reset of the system is powered down. When in the Self-Refresh mode, the DDR3L SDRAM retains data without external clocking. The DDR3L SDRAM device has a built-in timer to accommodate Self-Refresh operation. The Self-Refresh Entry (SRE) Command is defined by having CS#, RAS#, CAS#, and CKE held low with WE# high at the rising edge of the clock.
Before issuing the Self-Refreshing-Entry command, the DDR3L SDRAM must be idle with all bank precharge state with tRP satisfied. Also, on-die termination must be turned off before issuing Self-Refresh-Entry command, by either registering ODT pin low “ODTL + 0.5tCK” prior to the Self-Refresh Entry command or using MRS to MR1 command.
Once the Self-Refresh Entry command is registered, CKE must be held low to keep the device in Self-Refresh mode.
During normal operation (DLL on), MR1 (A0=0), the DLL is automatically disabled upon entering Self- Refresh and is automatically enabled (including a DLL-RESET) upon exiting Self-Refresh.
When the DDR3L SDRAM has entered Self-Refresh mode, all of the external control signals, except CKE and RESET#, are “don’t care”. For proper Self-Refresh operation, all power supply and reference pins (VDD, VDDQ, VSS, VSSQ, VRefCA, and VRefDQ) must be at valid levels. The DRAM initiates a minimum of one Refresh command internally within tCKE period once it enters Self-Refresh mode.
The clock is internally disabled during Self-Refresh operation to save power. The minimum time that the DDR3L SDRAM must remain in Self-Refresh mode is tCKE. The user may change the external clock frequency or halt the external clock tCKSRE after Self-Refresh entry is registered; however, the clock must be restarted and stable tCKSRX before the device can exit Self-Refresh mode.
The procedure for exiting Self-Refresh requires a sequence of events. First, the clock must be stable prior to CKE going back HIGH. Once a Self-Refresh Exit Command (SRX, combination of CKE going high and either NOP or Deselect on command bus) is registered, a delay of at least tXS must be satisfied before a valid command not requiring a locked DLL can be issued to the device to allow for any internal refresh in progress. Before a command which requires a locked DLL can be applied, a delay of at least tXSDLL and applicable ZQCAL function requirements [TBD] must be satisfied. Before a command that requires a locked DLL can be applied, a delay of at least tXSDLL must be satisfied.
Depending on the system environment and the amount of time spent in Self-Refresh, ZQ calibration commands may be required to compensate for the voltage and temperature drift as described in “ZQ Calibration Commands”. To issue ZQ calibration commands, applicable timing requirements must be satisfied.
CKE must remain HIGH for the entire Self-Refresh exit period tXSDLL for proper operation except for Self-Refresh re-entry. Upon exit from Self-Refresh, the DDR3L SDRAM can be put back into Self-Refresh mode after waiting at least tXS period and issuing one refresh command (refresh period of tRFC). NOP or deselect commands must be registered on each positive clock edge during the Self-Refresh exit interval tXS. ODT must be turned off during tXSDLL. The use of Self-Refresh mode instructs the possibility that an internally times refresh event can be missed when CKE is raised for exit from Self-Refresh mode. Upon exit from Self-Refresh, the DDR3L SDRAM requires a minimum of one extra refresh command before it is put back into Self-Refresh mode.

chanhvinh.com



## Power-Down Modes

### Power-Down Entry and Exit

Power-Down is synchronously entered when CKE is registered low (along with NOP or Deselect command). CKE is not allowed to go low while mode register set command, MPR operations, ZQCAL operations, DLL locking or read/write operation are in progress. CKE is allowed to go low while any of other operation such as row activation, precharge or auto precharge and refresh are in progress, but power-down IDD spec will not be applied until finishing those operation.

The DLL should be in a locked state when power-down is entered for fastest power-down exit timing. If the DLL is not locked during power-down entry, the DLL must be reset after exiting power-down mode for proper read operation and synchronous ODT operation. DRAM design provides all AC and DC timing and voltage specification as well proper DLL operation with any CKE intensive operations as long as DRAM controller complies with DRAM specifications.

During Power-Down, if all banks are closed after any in progress commands are completed, the device will be in precharge Power-Down mode; if any bank is open after in progress commands are completed, the device will be in active Power-Down mode.

Entering Power-down deactivates the input and output buffers, excluding CK, CK, ODT, CKE, and RESET#. To protect DRAM internal delay on CKE line to block the input signals, multiple NOP or Deselect commands are needed during the CKE switch off and cycle(s) after, this timing period are defined as tCPDED. CKE_low will result in deactivation of command and address receivers after tCPDED has expired.

**Table 24. Power-Down Entry Definitions**

| Status of DRAM | MRS bit A12 | DLL | PD Exit | Relevant Parameters |
|---|---|---|---|---|
| Active<br>(A Bank or more open) | Don't Care | On | Fast | tXP to any valid command. |
| Precharged<br>(All Banks Precharged) | 0 | Off | Slow | tXP to any valid command. Since it is in precharge state, commands here will be ACT, AR, MRS/EMRS, PR or PRA.<br>tXPDLL to commands who need DLL to operate, such as RD, RDA or ODT control line. |
| Precharged<br>(All Banks Precharged) | 1 | On | Fast | tXP to any valid command. |

Also the DLL is disabled upon entering precharge power-down (Slow Exit Mode), but the DLL is kept enabled during precharge power-down (Fast Exit Mode) or active power-down. In power-down mode, CKE low, RESET# high, and a stable clock signal must be maintained at the inputs of the DD3 SDRAM, and ODT should be in a valid state but all other input signals are “Don’t care” (If RESET# goes low during Power-Down, the DRAM will be out of PD mode and into reset state).

CKE low must be maintain until tCKE has been satisfied. Power-down duration is limited by 9 times tREFI of the device. The power-down state is synchronously exited when CKE is registered high (along with a NOP or Deselect command).CKE high must be maintained until tCKE has been satisfied. A valid, executable command can be applied with power-down exit latency, tXP and/or tXPDLL after CKE goes high. Power-down exit latency is defined at AC spec table of this datasheet.

chanhvinh.com



## On-Die Termination (ODT)

On-die termination (ODT) is a feature that enables the DRAM to enable/disable and turn on/off termination resistance for each DQ, DQS, DQS#, and DM for the x8 configurations (and TDQS, TDQS# for the x8 configuration, when enabled).
ODT is designed to improve signal integrity of the memory channel by enabling the DRAM controller to independently turn on/off the DRAM' s internal termination resistance for any grouping of DRAM devices. ODT is not supported during DLL disable mode (simple functional representation shown below). The switch is enabled by the internal ODT control logic, which uses the external ODT ball and other control information.

### Figure 21. Functional representation of ODT

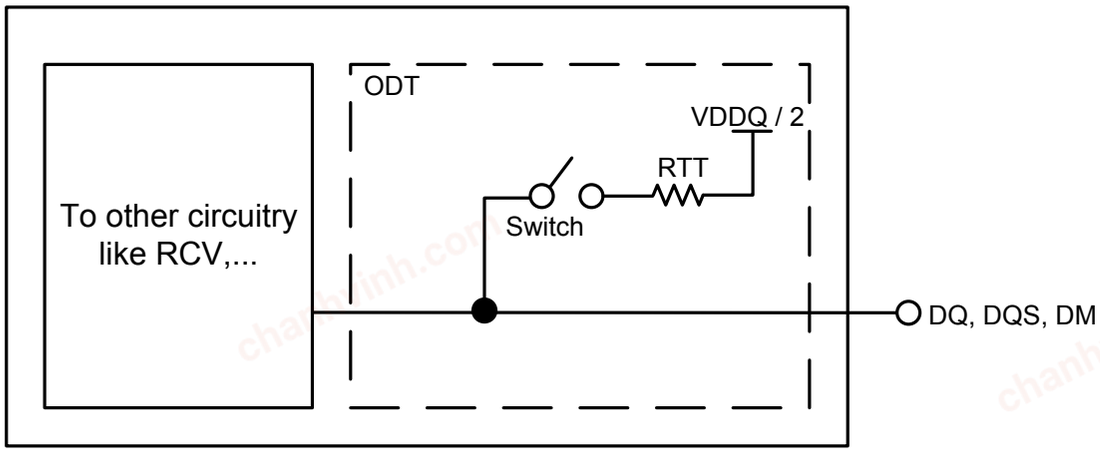


The switch is enabled by the internal ODT control logic, which uses the external ODT pin and other control information. The value of RTT is determined by the settings of Mode Register bits. The ODT pin will be ignored if the Mode Register MR1 and MR2 are programmed to disable ODT and in self-refresh mode.

## ODT Mode Register and ODT Truth Table

The ODT Mode is enabled if either of MR1 {A2, A6, A9} or MR2 {A9, A10} are non-zero. In this case, the value of RTT is determined by the settings of those bits.
Application: Controller sends WR command together with ODT asserted.
One possible application: The rank that is being written to provides termination.
DRAM turns ON termination if it sees ODT asserted (except ODT is disabled by MR)
DRAM does not use any write or read command decode information.

### Table 25. Termination Truth Table

| ODT pin | DRAM Termination State |
|---|---|
| 0 | OFF |
| 1 | On, (Off, if disabled by MR1 (A2, A6, A9) and MR2 (A9, A10) in gereral) |

chanhvinh.com



## Synchronous ODT Mode

Synchronous ODT mode is selected whenever the DLL is turned on and locked. Based on the power-down definition, these modes are:

- Any bank active with CKE high
- Refresh with CKE high
- Idle mode with CKE high
- Active power down mode (regardless of MR0 bit A12)
- Precharge power down mode if DLL is enabled during precharge power down by MR0 bit A12

The direct ODT feature is not supported during DLL-off mode. The on-die termination resistors must be disabled by continuously registering the ODT pin low and/or by programming the RTT_Nom bits MR1{A9,A6,A2} to {0,0,0} via a mode register set command during DLL-off mode.

In synchronous ODT mode, RTT will be turned on ODTLon clock cycles after ODT is sampled high by a rising clock edge and turned off ODTLoff clock cycles after ODT is registered low by a rising clock edge. The ODT latency is tied to the write latency (WL) by: ODTLon = WL - 2; ODTLoff = WL-2.

## ODT Latency and Posted ODT

In synchronous ODT Mode, the Additive Latency (AL) programmed into the Mode Register (MR1) also applies to the ODT signal. The DRAM internal ODT signal is delayed for a number of clock cycles defined by the Additive Latency (AL) relative to the external ODT signal. ODTLon = CWL + AL - 2; ODTLoff = CWL + AL - 2. For details, refer to DDR3L SDRAM latency definitions.

### Table 26. ODT Latency

| Symbol | Parameter | DDR3L-1600 | Unit |
|---|---|---|---|
| ODTLon | ODT turn on Latency | WL – 2 = CWL + AL -2 | tCK |
| ODTLoff | ODT turn off Latency | WL – 2 = CWL + AL -2 | tCK |

## Timing Parameters

In synchronous ODT mode, the following timing parameters apply: ODTLon, ODTLoff, tAON min/max, tAOF min/max.

Minimum RTT turn-on time (tAON min) is the point in time when the device leaves high impedance and ODT resistance begins to turn on. Maximum RTT turn-on time (tAON max) is the point in time when the ODT resistance is fully on. Both are measured from ODTLon.

Minimum RTT turn-off time (tAOF min) is the point in time when the device starts to turn off the ODT resistance. Maximum RTT turn off time (tAOF max) is the point in time when the on-die termination has reached high impedance. Both are measured from ODTLoff.

When ODT is asserted, it must remain high until ODTH4 is satisfied. If a Write command is registered by the SDRAM with ODT high, then ODT must remain high until ODTH4 (BL=4) or ODTH8 (BL=8) after the write command. ODTH4 and ODTH8 are measured from ODT registered high to ODT registered low or from the registration of a write command until ODT is registered low.

## ODT during Reads

As the DDR3L SDRAM cannot terminate and drive at the same time, RTT must be disabled at least half a clock cycle before the read preamble by driving the ODT pin low appropriately. RTT may not be enabled until the end of the post-amble as shown in the following figure. DRAM turns on the termination when it stops driving which is determined by tHZ. If DRAM stops driving early (i.e. tHZ is early), then tAONmin time may apply. If DRAM stops driving late (i.e. tHZ is late), then DRAM complies with tAONmax timing. Note that ODT may be disabled earlier before the Read and enabled later after the Read than shown in this example.

chanhvinh.com



**Figure 22. ODT must be disabled externally during Reads by driving ODT low**
**(CL=6; AL=CL-1=5; RL=AL+CL=11; CWL=5; ODTLon=CWL+AL-2=8; ODTLoff=CWL+AL-2=8)**

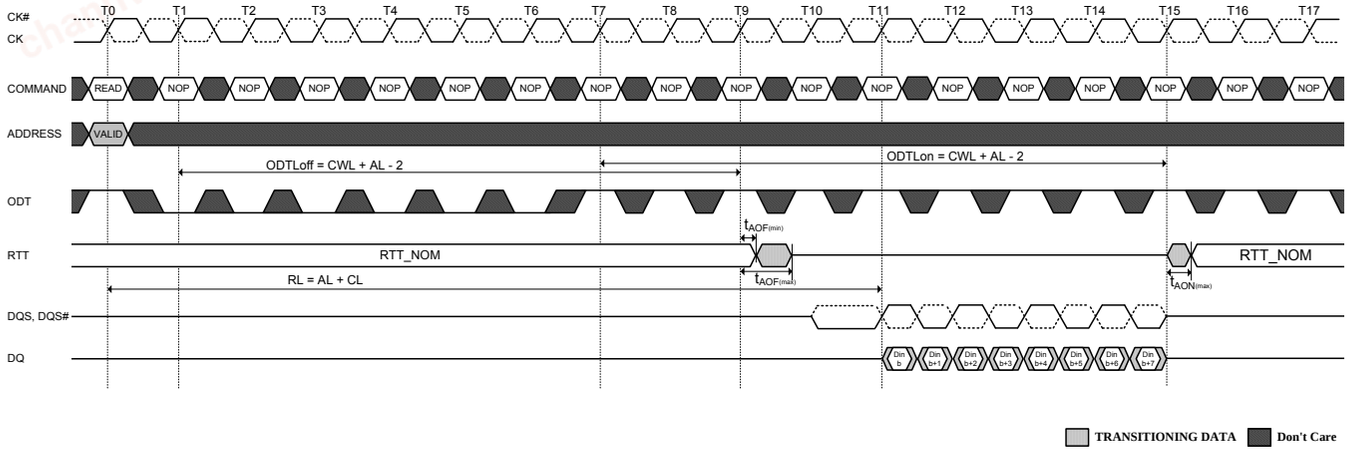


## Dynamic ODT

In certain application cases and to further enhance signal integrity on the data bus, it is desirable that the termination strength of the DDR3L SDRAM can be changed without issuing an MRS command. This requirement is supported by the “Dynamic ODT” feature as described as follows:

## Functional Description

The Dynamic ODT Mode is enabled if bit (A9) or (A10) of MR2 is set to ‘1’. The function is described as follows:

Two RTT values are available: RTT_Nom and RTT_WR.
- The value for RTT_Nom is preselected via bits A[9,6,2] in MR1.
- The value for RTT_WR is preselected via bits A[10,9] in MR2.

During operation without write commands, the termination is controlled as follows:
- Nominal termination strength RTT_Nom is selected.
- Termination on/off timing is controlled via ODT pin and latencies ODTLon and ODTLoff.

When a Write command (WR, WRA, WRS4, WRS8, WRAS4, WRAS8) is registered, and if Dynamic ODT is enabled, the termination is controlled as follows:
- A latency ODTLcnw after the write command, termination strength RTT_WR is selected.
- A latency ODTLcwn8 (for BL8, fixed by MRS or selected OTF) or ODTLcwn4 (for BC4, fixed by MRS or selected OTF) after the write command, termination strength RTT_Nom is selected.
- Termination on/off timing is controlled via ODT pin and ODTLon, ODTLoff.

The following table shows latencies and timing parameters which are relevant for the on-die termination control in Dynamic ODT mode.

The dynamic ODT feature is not supported at DLL-off mode. User must use MRS command to set RTT_WR, MR2 [A10,A9 = [0,0], to disable Dynamic ODT externally.
When ODT is asserted, it must remain high until ODTH4 is satisfied. If a Write command is registered by the SDRAM with ODT high, then ODT must remain high until ODTH4 (BL=4) or ODTH8 (BL=8) after the Write command. ODTH4 and ODTH8 are measured from ODT registered high to ODT registered low or from the registration of Write command until ODT is register low.

chanhvinh.com



## Table 27. Latencies and timing parameters relevant for Dynamic ODT

| Name and Description | Abbr. | Defined from | Defined to | Definition for all DDR3L speed pin | Unit |
|---|---|---|---|---|---|
| ODT turn-on Latency | ODTLon | registering external ODT signal high | turning termination on | ODTLon=WL-2 | tCK |
| ODT turn-off Latency | ODTLoff | registering external ODT signal low | turning termination off | ODTLoff=WL-2 | tCK |
| ODT Latency for changing from RTT_Nom to RTT_WR | ODTLcnw | registering external write command | change RTT strength from RTT_Nom to RTT_WR | ODTLcnw=WL-2 | tCK |
| ODT Latency for change from RTT_WR to RTT_Nom (BL=4) | ODTLcwn4 | registering external write command | change RTT strength from RTT_WR to RTT_Nom | ODTLcwn4=4+ODTLoff | tCK |
| ODT Latency for change from RTT_WR to RTT_Nom (BL=8) | ODTLcwn8 | registering external write command | change RTT strength from RTT_WR to RTT_Nom | ODTLcwn8=6+ODTLoff | tCK (avg) |
| Minimum ODT high time after ODT assertion | ODTH4 | registering ODT high | ODT registered low | ODTH4=4 | tCK (avg) |
| Minimum ODT high time after Write (BL=4) | ODTH4 | registering write with ODT high | ODT registered low | ODTH4=4 | tCK (avg) |
| Minimum ODT high time after Write (BL=8) | ODTH8 | registering write with ODT high | ODT register low | ODTH8=6 | tCK (avg) |
| RTT change skew | tADC | ODTLcnw ODTLcwn | RTT valid | tADC(min)=0.3tCK(avg) tADC(max)=0.7tCK(avg) | tCK (avg) |

**Note 1: tAOF, nom and tADC, nom are 0.5tCK (effectively adding half a clock cycle to ODTLoff, ODTcnw, and ODTLcwn)**

## Asynchronous ODT Mode

Asynchronous ODT mode is selected when DRAM runs in DLLon mode, but DLL is temporarily disabled (i.e. frozen) in precharge power-down (by MR0 bit A12). Based on the power down mode definitions, this is currently Precharge power down mode if DLL is disabled during precharge power down by MR0 bit A12.

In asynchronous ODT timing mode, internal ODT command is NOT delayed by Additive Latency (AL) relative to the external ODT command.

In asynchronous ODT mode, the following timing parameters apply: tAONPD min/max, tAOFPD min/max.

Minimum RTT turn-on time (tAONPD min) is the point in time when the device termination circuit leaves high impedance state and ODT resistance begins to turn on. Maximum RTT turn on time (tAONPD max) is the point in time when the ODT resistance is fully on.

tAONPDmin and tAONPDmax are measured from ODT being sampled high.

Minimum RTT turn-off time (tAOFPDmin) is the point in time when the devices termination circuit starts to turn off the ODT resistance. Maximum ODT turn off time (tAOFPDmax) is the point in time when the on-die termination has reached high impedance. tAOFPDmin and tAOFPDmax are measured from ODT being sample low.

## Table 28. ODT timing parameters for Power Down (with DLL frozen) entry and exit

| Description | Min | Max |
|---|---|---|
| ODT to RTT turn-on delay | min{ ODTLon * tCK + tAONmin; tAONPDmin } min{ (WL - 2) * tCK + tAONmin; tAONPDmin } | max{ ODTLon * tCK + tAONmax; tAONPDmax } max{ (WL - 2) * tCK + tAONmax; tAONPFmax } |
| ODT to RTT turn-off delay | min{ ODTLoff * tCK + tAOFmin; tAOFPDmin } min{ (WL - 2) * tCK + tAOFmin; tAOFPDmin } | max{ ODTLoff * tCK + tAOFmax; tAOFPDmax } max{ (WL - 2) * tCK + tAOFmax; tAOFPDmax } |
| tANPD | WL - 1 | |

chanhvinh.com



## Synchronous to Asynchronous ODT Mode Transition during Power-Down Entry

If DLL is selected to be frozen in Precharge Power Down Mode by the setting of bit A12 in MR0 to “0”, there is a transition period around power down entry, where the DDR3L SDRAM may show either synchronous or asynchronous ODT behavior.

The transition period is defined by the parameters tANPD and tCPDED(min). tANPD is equal to (WL-1) and is counted backwards in time from the clock cycle where CKE is first registered low. tCPDED(min) starts with the clock cycle where CKE is first registered low. The transition period begins with the starting point of tANPD and terminates at the end point of tCPDED(min). If there is a Refresh command in progress while CKE goes low, then the transition period ends at the later one of tRFC(min) after the Refresh command and the end point of tCPDED(min). Please note that the actual starting point at tANPD is excluded from the transition period, and the actual end point at tCPDED(min) and tRFC(min, respectively, are included in the transition period.

ODT assertion during the transition period may result in an RTT changes as early as the smaller of tAONPDmin and (ODTLon*tck+tAONmin) and as late as the larger of tAONPDmax and (ODTLon*tCK+tAONmax). ODT de-assertion during the transition period may result in an RTT change as early as the smaller of tAOFPDmin and (ODTLoff*tCK+tAOFmin) and as late as the larger of tAOFPDmax and (ODTLoff*tCK+tAOFmax). Note that, if AL has a large value, the range where RTT is uncertain becomes quite large. The following figure shows the three different cases: ODT_A, synchronous behavior before tANPD; ODT_B has a state change during the transition period; ODT_C shows a state change after the transition period.

## Asynchronous to Synchronous ODT Mode transition during Power-Down Exit

If DLL is selected to be frozen in Precharge Power Down Mode by the setting of bit A12 in MR0 to “0”, there is also a transition period around power down exit, where either synchronous or asynchronous response to a change in ODT must be expected from the DDR3L SDRAM.

This transition period starts tANPD before CKE is first registered high, and ends tXPDLL after CKE is first registered high. tANPD is equal to (WL -1) and is counted (backwards) from the clock cycle where CKE is first registered high.

ODT assertion during the transition period may result in an RTT change as early as the smaller of tAONPDmin and (ODTLon* tCK+tAONmin) and as late as the larger of tAONPDmax and (ODTLon*tCK+tAONmax). ODT de-assertion during the transition period may result in an RTT change as early as the smaller of tAOFPDmin and (ODTLoff*tCK+tAOFmin) and as late as the larger of tAOFPDmax and (ODToff*tCK+tAOFmax). Note that if AL has a large value, the range where RTT is uncertain becomes quite large. The following figure shows the three different cases: ODT_C, asynchronous response before tANPD; ODT_B has a state change of ODT during the transition period; ODT_A shows a state change of ODT after the transition period with synchronous response.

## Asynchronous to Synchronous ODT Mode during short CKE high and short CKE low periods

If the total time in Precharge Power Down state or Idle state is very short, the transition periods for PD entry and PD exit may overlap. In this case, the response of the DDR3L SDRAMs RTT to a change in ODT state at the input may be synchronous or asynchronous from the state of the PD entry transition period to the end of the PD exit transition period (even if the entry ends later than the exit period).

If the total time in Idle state is very short, the transition periods for PD exit and PD entry may overlap. In this case, the response of the DDR3L SDRAMs RTT to a change in ODT state at the input may be synchronous or asynchronous from the state of the PD exit transition period to the end of the PD entry transition period. Note that in the following figure, it is assumed that there was no Refresh command in progress when Idle state was entered.

chanhvinh.com



## ZQ Calibration Commands

## ZQ Calibration Description

ZQ Calibration command is used to calibrate DRAM Ron and ODT values. DDR3L SDRAM needs longer time to calibrate output driver and on-die termination circuits at initialization and relatively smaller time to perform periodic calibrations.

ZQCL command is used to perform the initial calibration during power-up initialization sequence. This command may be issued at any time by the controller depending on the system environment. ZQCL command triggers the calibration engine inside the DRAM and once calibration is achieved the calibrated values are transferred from calibration engine to DRAM IO which gets reflected as updated output driver and on-die termination values.

The first ZQCL command issued after reset is allowed a timing period of tZQinit to perform the full calibration and the transfer of values. All other ZQCL commands except the first ZQCL command issued after RESET is allowed a timing period of tZQoper.

ZQCS command is used to perform periodic calibrations to account for voltage and temperature variations. A shorter timing window is provided to perform the calibration and transfer of values as defined by timing parameter tZQCS.

No other activities should be performed on the DRAM channel by the controller for the duration of tZQinit, tZQoper, or tZQCS. The quiet time on the DRAM channel allows calibration of output driver and on-die termination values. Once DRAM calibration is achieved, the DRAM should disable ZQ current consumption path to reduce power.

All banks must be precharged and tRP met before ZQCL or ZQCS commands are issued by the controller.

ZQ calibration commands can also be issued in parallel to DLL lock time when coming out of self refresh. Upon self-refresh exit, DDR3L SDRAM will not perform an IO calibration without an explicit ZQ calibration command. The earliest possible time for ZQ Calibration command (short or long) after self refresh exit is tXS.

In systems that share the ZQ resistor between devices, the controller must not allow any overlap of tZQoper, tZQinit, or tZQCS between ranks.

### Figure 23. ZQ Calibration Timing

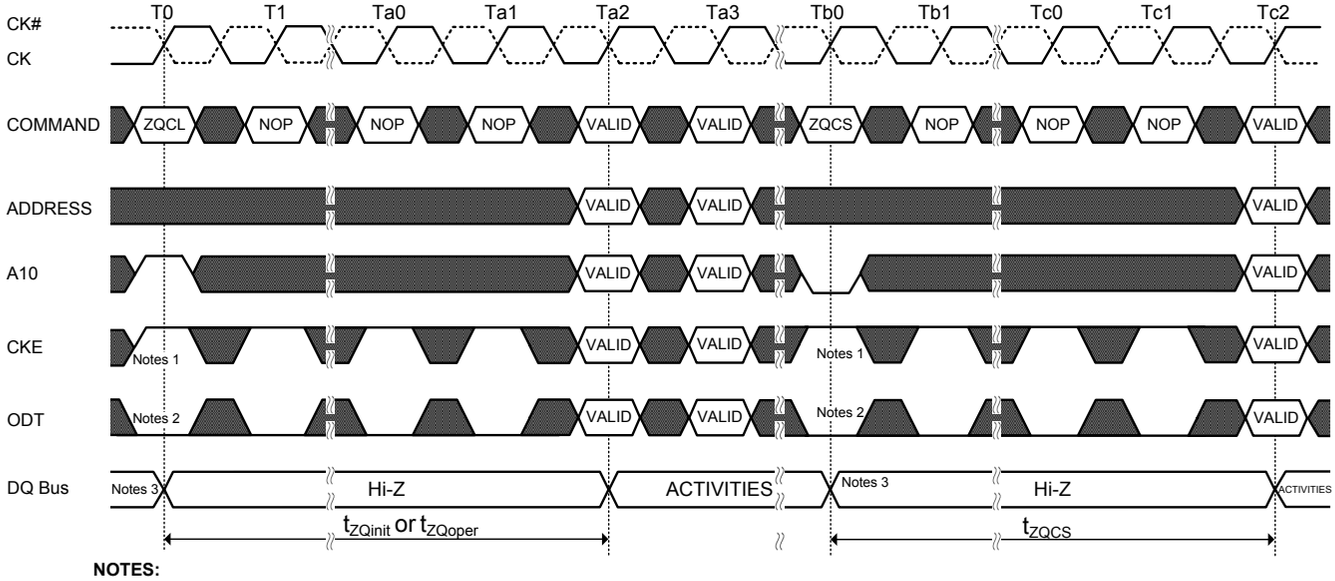


**NOTES:**
1. CKE must be continuously registered high during the calibration procedure.
2. On-die termination must be disabled via the ODT signal or MRS during the calibration procedure.
3. All devices connected to the DQ bus should be high impedance during the calibration procedure.

TIME BREAK  Don't Care

## ZQ External Resistor Value, Tolerance, and Capacitive loading

In order to use the ZQ calibration function, a 240 ohm ±1% tolerance external resistor connected between the ZQ pin and ground. The single resistor can be used for each SDRAM or one resistor can be shared between two SDRAMs if the ZQ calibration timings for each SDRAM do not overlap. The total capacitive loading on the ZQ pin must be limited.

chanhvinh.com



## - Single-ended requirements for differential signals

Each individual component of a differential signal (CK, CK#, DQS, DQS#) has also to comply with certain requirements for single-ended signals.
CK and CK# have to approximately reach VSEHmin / VSELmax (approximately equal to the ac-levels (VIH(ac) / VIL(ac)) for ADD/CMD signals) in every half-cycle. DQS, DQS# have to reach VSEHmin / VSELmax (approximately the ac-levels (VIH(ac) / VIL(ac)) for DQ signals) in every half-cycle proceeding and following a valid transition.
Note that the applicable ac-levels for ADD/CMD and DQ's might be different per speed-bin etc. E.g., if VIH150(ac) /VIL150(ac) is used for ADD/CMD signals, then these ac-levels apply also for the single-ended signals CK and CK#.

### Table 29. Single-ended levels for CK, DQS, CK#, DQS#

| Symbol | Parameter | Min. | Max. | Unit | Note |
|---|---|---|---|---|---|
| VSEH | Single-ended high level for strobes | ($V_{DD}$ / 2) + 0.175 | Note 3 | V | 1,2 |
| | Single-ended high level for CK, CK# | ($V_{DD}$ / 2) + 0.175 | Note 3 | V | 1,2 |
| VSEL | Single-ended low level for strobes | Note 3 | ($V_{DD}$ / 2) - 0.175 | V | 1,2 |
| | Single-ended low level for CK, CK# | Note 3 | ($V_{DD}$ / 2) - 0.175 | V | 1,2 |

Note 1. For CK, CK# use VIH/VIL(ac) of ADD/CMD; for strobes (DQS, DQS#) use VIH/VIL(ac) of DQs.
Note 2. VIH(ac)/VIL(ac) for DQs is based on VREFDQ; VIH(ac)/VIL(ac) for ADD/CMD is based on VREFCA; if a reduced ac-high or ac-low level is used for a signal group, then the reduced level applies also here.
Note 3. These values are not defined, however the single-ended signals CK, CK#, DQS, DQS# need to be within the respective limits (VIH(dc) max, VIL(dc)min) for single-ended signals as well as the limitations for overshoot and undershoot.

## - Differential Input Cross Point Voltage

To guarantee tight setup and hold times as well as output skew parameters with respect to clock and strobe, each cross point voltage of differential input signals (CK, CK# and DQS, DQS#) must meet the requirements in the following table. The differential input cross point voltage Vix is measured from the actual cross point of true and complete signal to the midlevel between of VDD and VSS.

### Table 30. Cross point voltage for differential input signals (CK, DQS)

| Symbol | Parameter | Min. | Max. | Unit | Note |
|---|---|---|---|---|---|
| VIX(CK) | Differential Input Cross Point Voltage relative to VDD/2 for CK, CK# | - 150 | 150 | mV | 1 |
| VIX(DQS) | Differential Input Cross Point Voltage relative to VDD/2 for DQS, DQS# | - 150 | 150 | mV | 1 |

Note 1. The relation between Vix Min/Max and VSEL/VSEH should satisfy following.
(VDD/2) + Vix (Min) - VSEL ≧ 25mV
VSEH - ((VDD/2) + Vix (Max)) ≧ 25mV

chanhvinh.com



## - Slew Rate Definition for Differential Input Signals

Input slew rate for differential signals (CK, CK# and DQS, DQS#) are defined and measured as shown below.

### Table 31. Differential Input Slew Rate Definition

| Description | Measured | | Defined by |
|---|---|---|---|
| | From | To | |
| Differential input slew rate for rising edge (CK, CK# and DQS, DQS#) | VILdiffmax | VIHdiffmin | [VIHdiffmin-VILdiffmax] / DeltaTRdiff |
| Differential input slew rate for falling edge (CK, CK# and DQS, DQS#) | VIHdiffmin | VILdiffmax | [VIHdiffmin-VILdiffmax] / DeltaTFdiff |

**NOTE:** The differential signal (i.e., CK, CK# and DQS, DQS#) must be linear between these thresholds.

### Table 32. Single-ended AC and DC Output Levels

| Symbol | Parameter | Values | Unit | Note |
|---|---|---|---|---|
| $V_{OH}$(DC) | DC output high measurement level (for IV curve linearity) | 0.8 x $V_{DDQ}$ | V | |
| $V_{OM}$(DC) | DC output mid measurement level (for IV curve linearity) | 0.5 x $V_{DDQ}$ | V | |
| $V_{OL}$(DC) | DC output low measurement level (for IV curve linearity) | 0.2 x $V_{DDQ}$ | V | |
| $V_{OH}$(AC) | AC output high measurement level (for output SR) | $V_{TT}$ + 0.1 x $V_{DDQ}$ | V | 1 |
| $V_{OL}$(AC) | AC output low measurement level (for output SR) | $V_{TT}$ - 0.1 x $V_{DDQ}$ | V | 1 |

**NOTE 1:** The swing of ± 0.1 × VDDQ is based on approximately 50% of the static single-ended output high or low swing with a driver impedance of 40 Ω and an effective test load of 25 Ω to VTT = VDDQ/2.

### Table 33. Differential AC and DC Output Levels

| Symbol | Parameter | Values | Unit | Note |
|---|---|---|---|---|
| $V_{OHdiff}$(AC) | AC differential output high measurement level (for output SR) | + 0.2 x $V_{DDQ}$ | V | 1 |
| $V_{OLdiff}$(AC) | AC differential output low measurement level (for output SR) | - 0.2 x $V_{DDQ}$ | V | 1 |

**NOTE 1:** The swing of ± 0.2 × VDDQ is based on approximately 50% of the static single-ended output high or low swing with a driver impedance of 40 Ω and an effective test load of 25 Ω to VTT = VDDQ/2 at each of the differential outputs.

chanhvinh.com



## - Single Ended Output Slew Rate

With the reference load for timing measurements, output slew rate for falling and rising edges is defined and measured between VOL(AC) and VOH(AC) for single ended signals as shown in Table.

### Table 34. Output Slew Rate Definition (Single-ended)

| Description | Measured | | Defined by |
|---|---|---|---|
| | From | To | |
| Single-ended output slew rate for rising edge | VOL(AC) | VOH(AC) | [VOH(AC) - VOL(AC)] / DeltaTRse |
| Single-ended output slew rate for falling edge | VOH(AC) | VOL(AC) | [VOH(AC) - VOL(AC)] / DeltaTFse |

**NOTE:** Output slew rate is verified by design and characterization, and may not be subject to production test.

### Table 35. Output Slew Rate (Single-ended)

| Symbol | Parameter | DDR3L-1600 | | Unit |
|---|---|---|---|---|
| | | Min. | Max. | |
| SRQse | Single-ended Output Slew Rate | 1.75 | 5[1] | V/ns |

**Description:**
SR: Slew Rate
Q: Query Output (like in DQ, which stands for Data-in, Query-Output)
se: Single-ended Signals
For Ron = RZQ/7 setting

**NOTE1:** In two cases, a maximum slew rate of 6V/ns applies for a single DQ signal within a byte lane.

**Case 1** is defined for a single DQ signal within a byte lane which is switching into a certain direction (either from high to low or low to high) while all remaining DQ signals in the same byte lane are static (i.e. they stay at either high or low).

**Case 2** is defined for a single DQ signal within a byte lane which is switching into a certain direction (either from high to low or low to high) while all remaining DQ signals in the same byte lane are switching into the opposite direction (i.e. from low to high or high to low respectively). For the remaining DQ signal switching into the opposite direction, the regular maximum limit of 5 V/ns applies.

## - Differential Output Slew Rate

With the reference load for timing measurements, output slew rate for falling and rising edges is defined and measured between VOLdiff(AC) and VOHdiff(AC) for differential signals as shown in Table.

### Table 36. Output Slew Rate Definition (Differential)

| Description | Measured | | Defined by |
|---|---|---|---|
| | From | To | |
| Differential output slew rate for rising edge | VOLdiff(AC) | VOHdiff(AC) | [VOHdiff(AC) - VOLdiff(AC)] / DeltaTRdiff |
| Differential output slew rate for falling edge | VOHdiff(AC) | VOLdiff(AC) | [VOHdiff(AC) - VOLdiff(AC)] / DeltaTFdiff |

**NOTE:** Output slew rate is verified by design and characterization, and may not be subject to production test.

### Table 37. Output Slew Rate (Differential)

| Symbol | Parameter | DDR3L-1600 | | Unit |
|---|---|---|---|---|
| | | Min. | Max. | |
| SRQdiff | Differential Output Slew Rate | 3.5 | 10 | V/ns |

**Description:**
SR: Slew Rate
Q: Query Output (like in DQ, which stands for Data-in, Query-Output)
diff: Differential Signals
For Ron = RZQ/7 setting

chanhvinh.com



## Reference Load for AC Timing and Output Slew Rate

The following figure represents the effective reference load of 25 ohms used in defining the relevant AC timing parameters of the device as well as output slew rate measurements.
It is not intended as a precise representation of any particular system environment or a depiction of the actual load presented by a production tester. System designers should use IBIS or other simulation tools to correlate the timing reference load to a system environment. Manufacturers correlate to their production test conditions, generally one or more coaxial transmission lines terminated at the tester electronics.

### Figure 24. Reference Load for AC Timing and Output Slew Rate

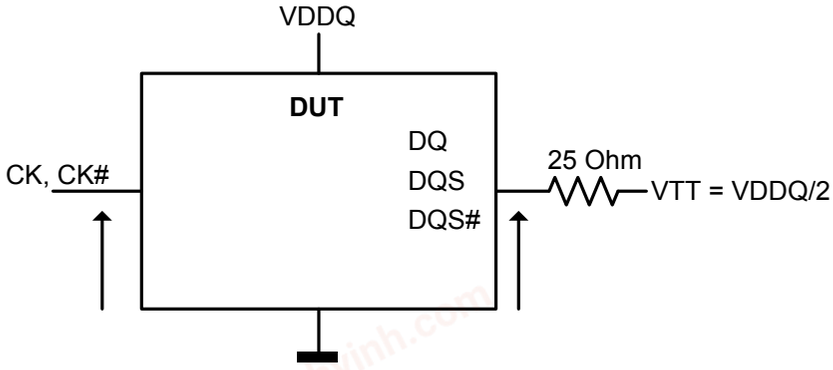


### Table 38. AC Overshoot/Undershoot Specification for Address and Control Pins

| Parameter | -12 | Unit |
|---|---|---|
| Maximum peak amplitude allowed for overshoot area. | 0.4 | V |
| Maximum peak amplitude allowed for undershoot area. | 0.4 | V |
| Maximum overshoot area above VDD | 0.33 | V-ns |
| Maximum undershoot area below VSS | 0.33 | V-ns |

### Table 39. AC Overshoot/Undershoot Specification for Clock, Data, Strobe and Mask

| Parameter | -12 | Unit |
|---|---|---|
| Maximum peak amplitude allowed for overshoot area. | 0.4 | V |
| Maximum peak amplitude allowed for undershoot area. | 0.4 | V |
| Maximum overshoot area above VDD | 0.13 | V-ns |
| Maximum undershoot area below VSS | 0.13 | V-ns |

chanhvinh.com



## - Address / Command Setup, Hold and Derating

For all input signals the total tIS (setup time) and tIH (hold time) required is calculated by adding the data sheet tIS(base) and tIH(base) and tIH(base) value to the delta tIS and delta tIH derating value respectively.
Example: tIS (total setup time) = tIS(base) + delta tIS.
Setup (tIS) nominal slew rate for a rising signal is defined as the slew rate between the last crossing of Vref(dc) and the first crossing of VIH(ac)min. Setup (tIS) nominal slew rate for a falling signal is defined as the slew rate between the last crossing of Vref(dc) and the first crossing of VIL(ac)max. If the actual signal is always earlier than the nominal slew rate line between shaded 'Vref(dc) to ac region', use nominal slew rate for derating value. If the actual signal is later than the nominal slew rate line anywhere between shaded 'Vref(dc) to ac region', the slew rate of the tangent line to the actual signal from the ac level to dc level is used for derating value.
Hold (tIH) nominal slew rate for a rising signal is defined as the slew rate between the last crossing of VIL(dc)max and the first crossing of Vref(dc). Hold (tIH) nominal slew rate for a falling signal is defined as the slew rate between the last crossing of VIH(dc)min and the first crossing of Vref(dc). If the actual signal is always later than the nominal slew rate line between shaded 'dc to Vref(dc) region', use nominal slew rate for derating value. If the actual signal is earlier than the nominal slew rate line anywhere between shaded 'dc to Vref(dc) region', the slew rate of a tangent line to the actual signal from the dc level to Vref(dc) level is used for derating value.
For a valid transition the input signal has to remain above/below VIH/IL(ac) for some time tVAC.
Although for slow slew rates the total setup time might be negative (i.e. a valid input signal will not have reached VIH/IL(ac) at the time of the rising clock transition) a valid input signal is still required to complete the transition and reach VIH/IL(ac).
For slew rates in between the values listed in the following tables, the derating values may be obtained by linear interpolation.
These values are typically not subject to production test. They are verified by design and characterization

### Table 40. ADD/CMD Setup and Hold Base

| Symbol | Reference | -12 | Unit |
|---|---|---|---|
| $t_{IS}$(base) AC160 | $V_{IH/L}$(ac) | 60 | ps |
| $t_{IS}$(base) AC135 | $V_{IH/L}$(ac) | 185 | ps |
| $t_{IH}$(base) DC90 | $V_{IH/L}$(dc) | 130 | ps |

**NOTE 1:** (ac/dc referenced for 1V/ns Address/Command slew rate and 2 V/ns differential CK-CK# slew rate)
**NOTE 2:** The tIS(base) AC135 specifications are adjusted from the tIS(base) AC160 specification by adding an additional 100ps of derating to accommodate for the lower alternate threshold of 135 mV and another 25 ps to account for the earlier reference point [(160 mv - 135 mV) / 1 V/ns].

### Table 41. Derating values DDR3L-1600 tIS/tIH – (AC160)

| $\Delta t_{IS}$, $\Delta t_{IH}$ derating in [ps] AC/DC based AC160 Threshold -> $V_{IH}(ac)=V_{REF}(dc)+160mV$, $V_{IL}(ac)=V_{REF}(dc)-160mV$ | | | | | | | | | | | | | | | | | |
|---|---|---|---|---|---|---|---|---|---|---|---|---|---|---|---|---|---|
| | | CK, CK# Differential Slew Rate | | | | | | | | | | | | | | | |
| | | 4.0 V/ns | | 3.0 V/ns | | 2.0 V/ns | | 1.8 V/ns | | 1.6 V/ns | | 1.4 V/ns | | 1.2 V/ns | | 1.0 V/ns | |
| | | Δ tIS | Δ tIH | Δ tIS | Δ tIH | Δ tIS | Δ tIH | Δ tIS | Δ tIH | Δ tIS | Δ tIH | Δ tIS | Δ tIH | Δ tIS | Δ tIH | Δ tIS | Δ tIH |
| CMD/ ADD Slew Rate V/ns | 2.0 | 80 | 45 | 80 | 45 | 80 | 45 | 88 | 53 | 96 | 61 | 104 | 69 | 112 | 79 | 120 | 95 |
| | 1.5 | 53 | 30 | 53 | 30 | 53 | 30 | 61 | 38 | 69 | 46 | 77 | 54 | 85 | 64 | 93 | 80 |
| | 1.0 | 0 | 0 | 0 | 0 | 0 | 0 | 8 | 8 | 16 | 16 | 24 | 24 | 32 | 34 | 40 | 50 |
| | 0.9 | -1 | -3 | -1 | -3 | -1 | -3 | 7 | 5 | 15 | 13 | 23 | 21 | 31 | 31 | 39 | 47 |
| | 0.8 | -3 | -8 | -3 | -8 | -3 | -8 | 5 | 1 | 13 | 9 | 21 | 17 | 29 | 27 | 37 | 43 |
| | 0.7 | -5 | -13 | -5 | -13 | -5 | -13 | 3 | -5 | 11 | 3 | 19 | 11 | 27 | 21 | 35 | 37 |
| | 0.6 | -8 | -20 | -8 | -20 | -8 | -20 | 0 | -12 | 8 | -4 | 16 | 4 | 24 | 14 | 32 | 30 |
| | 0.5 | -20 | -30 | -20 | -30 | -20 | -30 | -12 | -22 | -4 | -14 | 4 | -6 | 12 | 4 | 20 | 20 |
| | 0.4 | -40 | -45 | -40 | -45 | -40 | -45 | -32 | -37 | -24 | -29 | -16 | -21 | -8 | -11 | 0 | 5 |

chanhvinh.com



## Table 42. Derating values DDR3L-1600 tIS/tIH – (AC135)

| $\Delta t_{IS}$, $\Delta t_{IH}$ derating in [ps] AC/DC based Alternate AC135 Threshold -> $V_{IH}(ac)=V_{REF}(dc)+135mV$, $V_{IL}(ac)=V_{REF}(dc)-135mV$ | | | | | | | | | | | | | | | | | |
|---|---|---|---|---|---|---|---|---|---|---|---|---|---|---|---|---|---|
| | | CK, CK# Differential Slew Rate | | | | | | | | | | | | | | | |
| | | 4.0 V/ns | | 3.0 V/ns | | 2.0 V/ns | | 1.8 V/ns | | 1.6 V/ns | | 1.4 V/ns | | 1.2 V/ns | | 1.0 V/ns | |
| | | ΔtIS | ΔtIH | ΔtIS | ΔtIH | ΔtIS | ΔtIH | ΔtIS | ΔtIH | ΔtIS | ΔtIH | ΔtIS | ΔtIH | ΔtIS | ΔtIH | ΔtIS | ΔtIH |
| CMD/ ADD Slew Rate V/ns | **2.0** | 68 | 45 | 68 | 45 | 68 | 45 | 76 | 53 | 84 | 61 | 92 | 69 | 100 | 79 | 108 | 95 |
| | **1.5** | 45 | 30 | 45 | 30 | 45 | 30 | 53 | 38 | 61 | 46 | 69 | 54 | 77 | 64 | 85 | 80 |
| | **1.0** | 0 | 0 | 0 | 0 | 0 | 0 | 8 | 8 | 16 | 16 | 24 | 24 | 32 | 34 | 40 | 50 |
| | **0.9** | 2 | -3 | 2 | -3 | 2 | -3 | 10 | 5 | 18 | 13 | 26 | 21 | 34 | 31 | 42 | 47 |
| | **0.8** | 3 | -8 | 3 | -8 | 3 | -8 | 11 | 1 | 19 | 9 | 27 | 17 | 35 | 27 | 43 | 43 |
| | **0.7** | 6 | -13 | 6 | -13 | 6 | -13 | 14 | -5 | 22 | 3 | 30 | 11 | 38 | 21 | 46 | 37 |
| | **0.6** | 9 | -20 | 9 | -20 | 9 | -20 | 17 | -12 | 25 | -4 | 33 | 4 | 41 | 14 | 49 | 30 |
| | **0.5** | 5 | -30 | 5 | -30 | 5 | -30 | 13 | -22 | 21 | -14 | 29 | -6 | 37 | 4 | 45 | 20 |
| | **0.4** | -3 | -45 | -3 | -45 | -3 | -45 | 6 | -37 | 14 | -29 | 22 | -21 | 30 | -11 | 38 | 5 |

chanhvinh.com



## - Data Setup, Hold, and Slew Rate De-rating

For all input signals the total tDS (setup time) and tDH (hold time) required is calculated by adding the data sheet tDS(base) and tDH(base) value to the Δ tDS and Δ tDH derating value respectively.

Example: tDS (total setup time) = tDS(base) + Δ tDS.

Setup (tDS) nominal slew rate for a rising signal is defined as the slew rate between the last crossing of Vref(dc) and the first crossing of VIH(ac)min. Setup (tDS) nominal slew rate for a falling signal is defined as the slew rate between the last crossing of Vref(dc) and the first crossing of VIL(ac)max. If the actual signal is always earlier than the nominal slew rate line between shaded 'Vref(dc) to ac region', use nominal slew rate for derating value. If the actual signal is later than the nominal slew rate line anywhere between shaded 'Vref(dc) to ac region', the slew rate of the tangent line to the actual signal from the ac level to dc level is used for derating value.

Hold (tDH) nominal slew rate for a rising signal is defined as the slew rate between the last crossing of VIL(dc)max and the first crossing of Vref(dc). Hold (tDH) nominal slew rate for a falling signal is defined as the slew rate between the last crossing of VIH(dc)min and the first crossing of Vref(dc). If the actual signal is always later than the nominal slew rate line between shaded 'dc level to Vref(dc) region', use nominal slew rate for derating value. If the actual signal is earlier than the nominal slew rate line anywhere between shaded 'dc to Vref(dc) region', the slew rate of a tangent line to the actual signal from the dc level to Vref(dc) level is used for derating value.

For a valid transition the input signal has to remain above/below VIH/IL(ac) for some time tVAC.

Although for slow slew rates the total setup time might be negative (i.e. a valid input signal will not have reached VIH/IL(ac) at the time of the rising clock transition) a valid input signal is still required to complete the transition and reach VIH/IL(ac).

For slew rates in between the values listed in the following tables, the derating values may be obtained by linear interpolation.

These values are typically not subject to production test. They are verified by design and characterization.

### Table 43. Data Setup and Hold Base

| Symbol | Reference | -12 | Unit |
|---|---|---|---|
| $t_{DS}$(base) AC135 | $V_{IH/L}$(ac) | 25 | ps |
| $t_{DH}$(base) DC90 | $V_{IH/L}$(dc) | 55 | ps |

**NOTE:** (ac/dc referenced for 1V/ns DQ- slew rate and 2 V/ns differential DQS slew rate)

### Table 44. Derating values for DDR3L-1600 tDS/tDH – (AC135)

| $\Delta t_{DS}$, $\Delta t_{DH}$ derating in [ps] AC/DC based Alternate AC135 Threshold -> $V_{IH}(ac)=V_{REF}(dc)+135mV$, $V_{IL}(ac)=V_{REF}(dc)-135mV$ | | | | | | | | | | | | | | | | | |
|---|---|---|---|---|---|---|---|---|---|---|---|---|---|---|---|---|---|
| DQS, DQS# Differential Slew Rate | | | | | | | | | | | | | | | | | |
| | | 4.0 V/ns | | 3.0 V/ns | | 2.0 V/ns | | 1.8 V/ns | | 1.6 V/ns | | 1.4 V/ns | | 1.2 V/ns | | 1.0 V/ns | |
| | | Δ tDS | Δ tDH | Δ tDS | Δ tDH | Δ tDS | Δ tDH | Δ tDS | Δ tDH | Δ tDS | Δ tDH | Δ tDS | Δ tDH | Δ tDS | Δ tDH | Δ tDS | Δ tDH |
| DQ Slew Rate V/ns | 2.0 | 68 | 45 | 68 | 45 | 68 | 45 | - | - | - | - | - | - | - | - | - | - |
| | 1.5 | 45 | 30 | 45 | 30 | 45 | 30 | 53 | 38 | - | - | - | - | - | - | - | - |
| | 1.0 | 0 | 0 | 0 | 0 | 0 | 0 | 8 | 8 | 16 | 16 | - | - | - | - | - | - |
| | 0.9 | - | - | 2 | -3 | 2 | -3 | 10 | 5 | 18 | 13 | 26 | 21 | - | - | - | - |
| | 0.8 | - | - | - | - | 3 | -8 | 11 | 1 | 19 | 9 | 27 | 17 | 35 | 27 | - | - |
| | 0.7 | - | - | - | - | - | - | 14 | -5 | 22 | 3 | 30 | 11 | 38 | 21 | 46 | 37 |
| | 0.6 | - | - | - | - | - | - | - | - | 25 | -4 | 33 | 4 | 41 | 14 | 49 | 30 |
| | 0.5 | - | - | - | - | - | - | - | - | - | - | 29 | -6 | 37 | 4 | 45 | 20 |
| | 0.4 | - | - | - | - | - | - | - | - | - | - | - | - | 30 | -11 | 38 | 5 |

chanhvinh.com



## Timing Waveforms

### Figure 25. MPR Readout of predefined pattern,BL8 fixed burst order, single readout

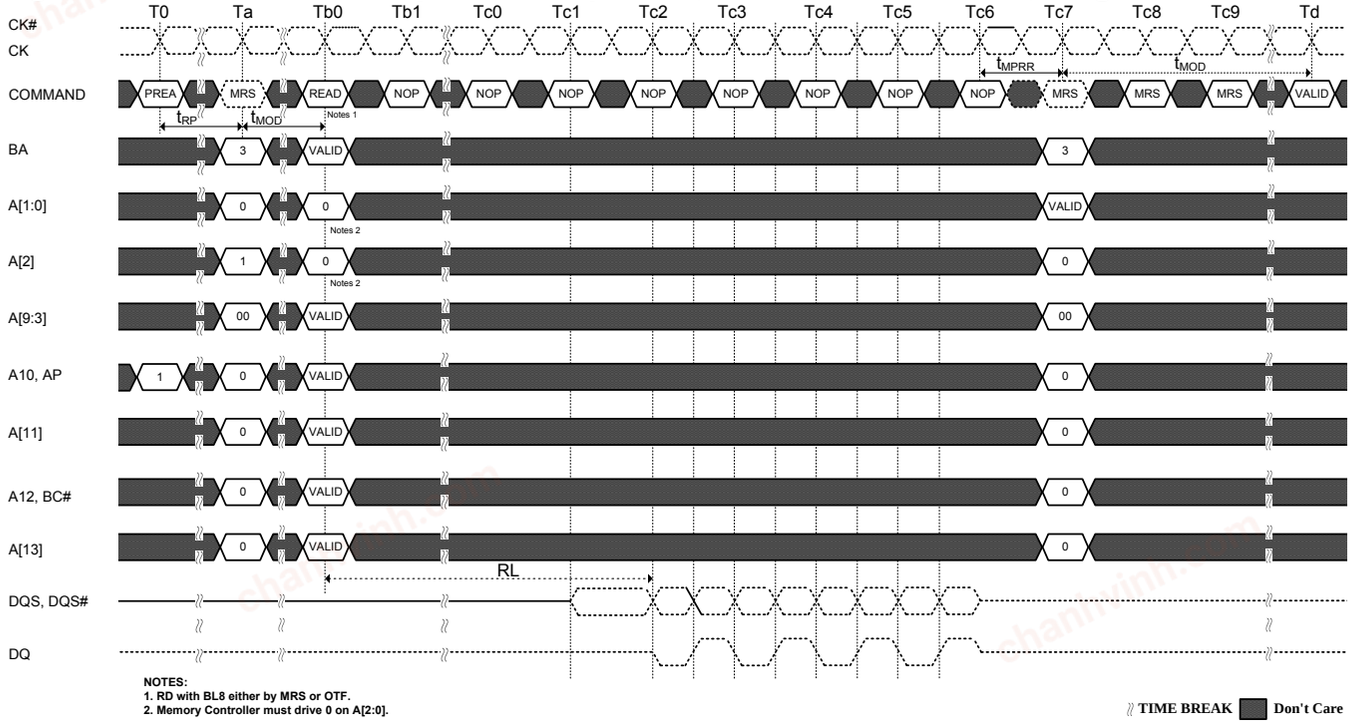


### Figure 26. MPR Readout of predefined pattern,BL8 fixed burst order, back to back readout

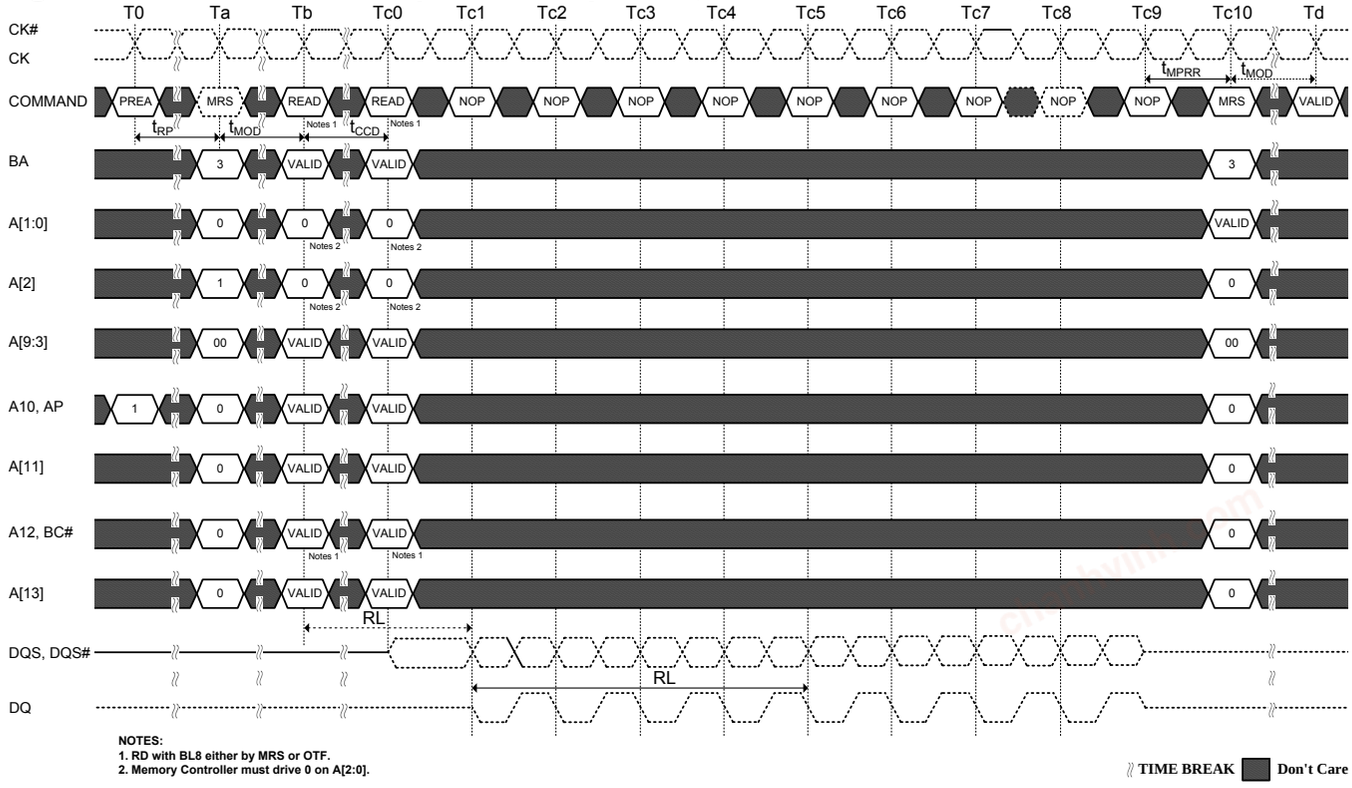

chanhvinh.com



## Figure 27. MPR Readout of predefined pattern,BC4 lower nibble then upper nibble

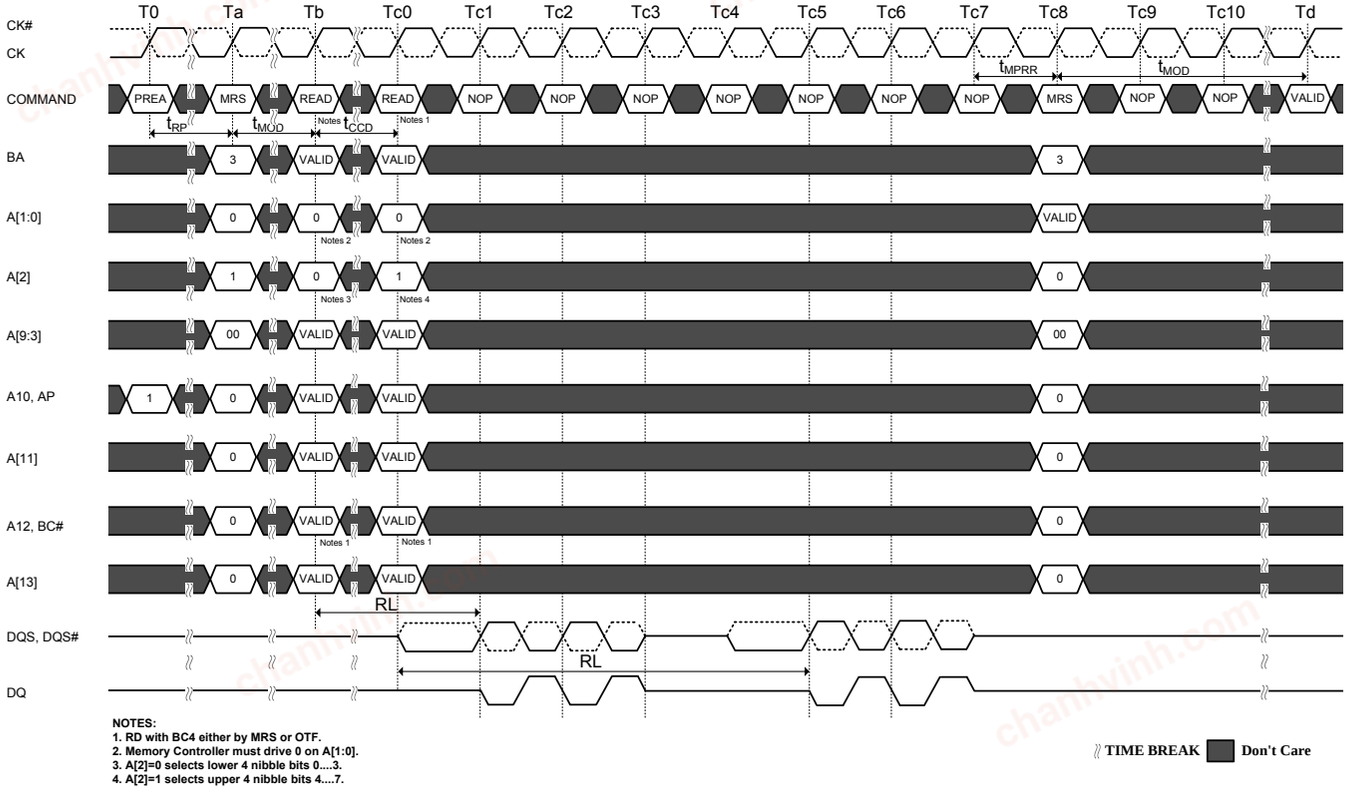


NOTES:
1. RD with BC4 either by MRS or OTF.
2. Memory Controller must drive 0 on A[1:0].
3. A[2]=0 selects lower 4 nibble bits 0....3.
4. A[2]=1 selects upper 4 nibble bits 4....7.

## Figure 28. MPR Readout of predefined pattern,BC4 upper nibble then lower nibble

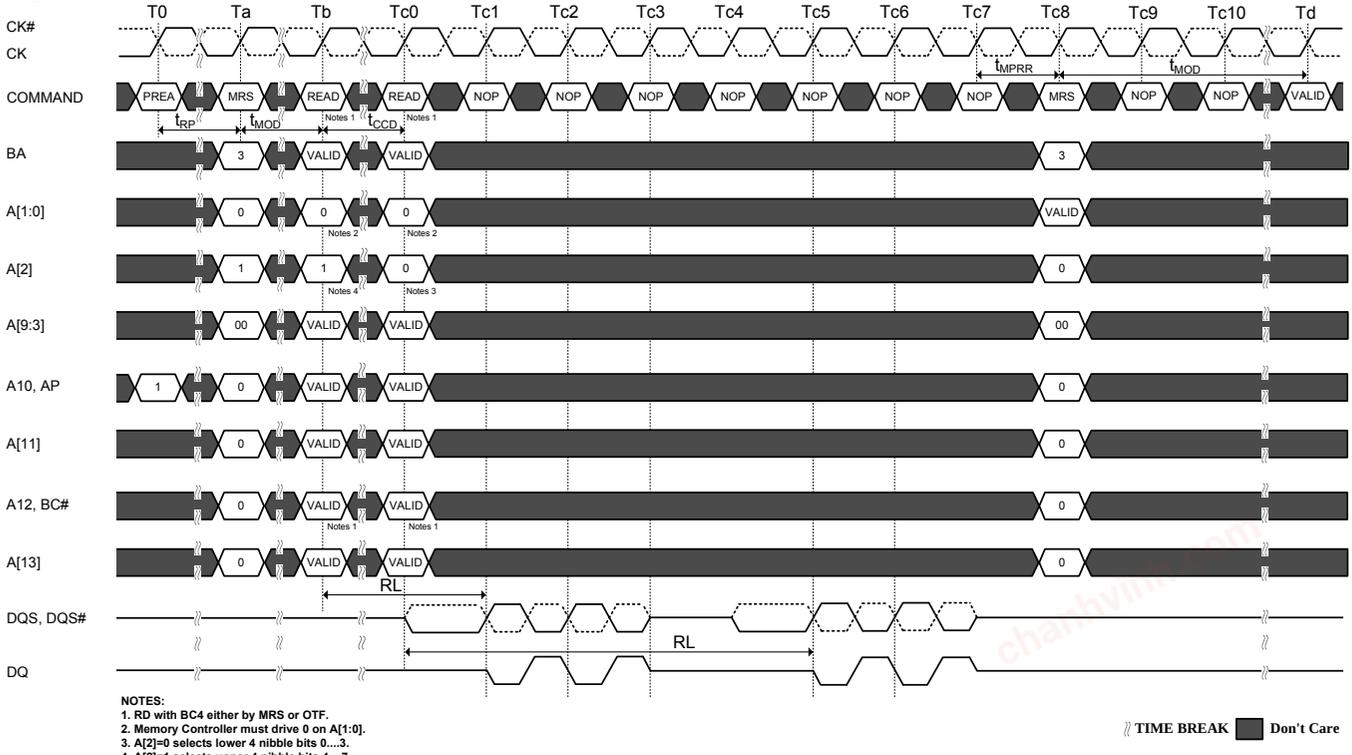


NOTES:
1. RD with BC4 either by MRS or OTF.
2. Memory Controller must drive 0 on A[1:0].
3. A[2]=0 selects lower 4 nibble bits 0....3.
4. A[2]=1 selects upper 4 nibble bits 4....7.

chanhvinh.com



## Figure 29. READ (BL8) to READ (BL8)

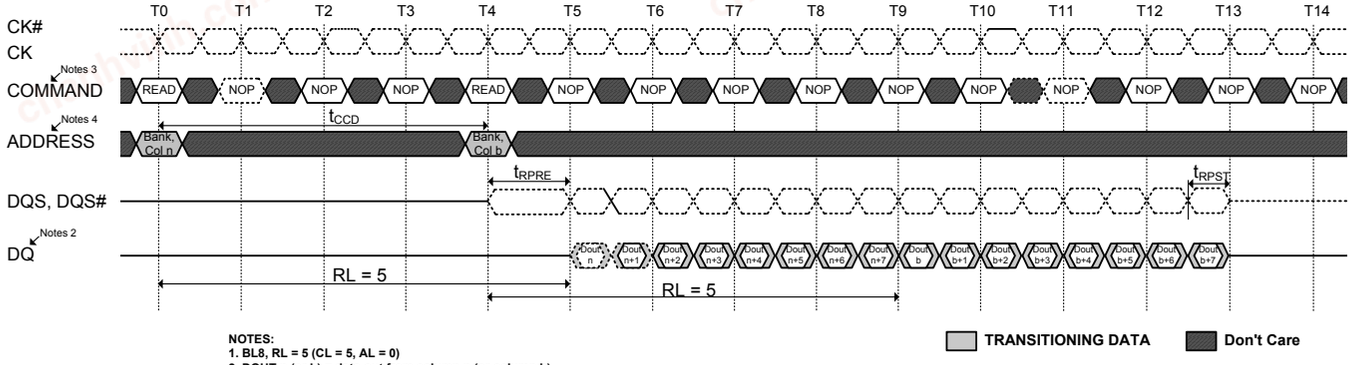


NOTES:
1. BL8, RL = 5 (CL = 5, AL = 0)
2. DOUT n (or b) = data-out from column n (or column b).
3. NOP commands are shown for ease of illustration; other commands may be valid at these times.
4. BL8 setting activated by either MR0[A1:0 = 00] or MR0[A1:0 = 01] and A12 = 1 during READ commands at T0 and T4.

TRANSITIONING DATA  Don't Care

## Figure 30. Nonconsecutive READ (BL8) to READ (BL8)

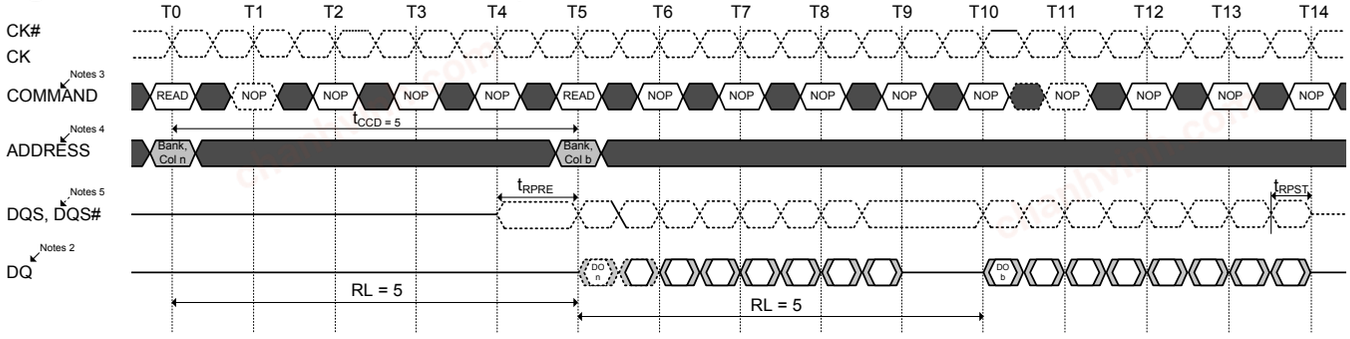


NOTES:
1. BL8, RL = 5 (CL = 5, AL = 0), tCCD=5
2. DOUT n (or b) = data-out from column n (or column b)
3. NOP commands are shown for ease of illustration; other commands may be valid at these times
4. BL8 setting activated by either MR0[A1:0 = 00] or MR0[A1:0 = 01] and A12 = 1 during READ commands at T0 and T4
5. DQS-DQS# is held logic low at T9

TRANSITIONING DATA  Don't Care

## Figure 31. READ (BL4) to READ (BL4)

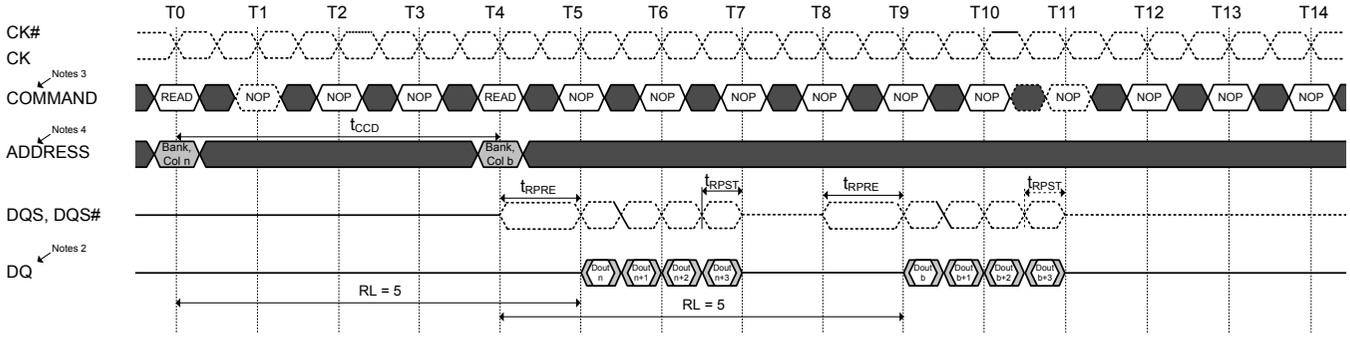


NOTES:
1. BC4, RL = 5 (CL = 5, AL = 0)
2. DOUT n (or b) = data-out from column n (or column b).
3. NOP commands are shown for ease of illustration; other commands may be valid at these times.
4. BC4 setting activated by either MR0[A1:0 = 10] or MR0[A1:0 = 01] and A12 = 0 during READ commands at T0 and T4.

TRANSITIONING DATA  Don't Care

chanhvinh.com



## Figure 32. READ (BL8) to WRITE (BL8)

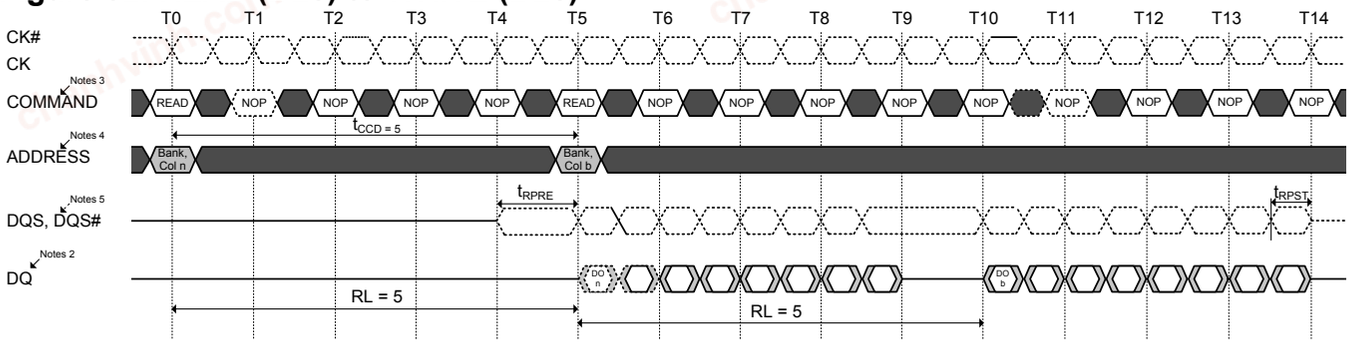


**NOTES:**
1. BL8, RL = 5 (CL = 5, AL = 0), tCCD=5
2. DOUT n (or b) = data-out from column n (or column b)
3. NOP commands are shown for ease of illustration; other commands may be valid at these times
4. BL8 setting activated by either MR0[A1:0 = 00] or MR0[A1:0 = 01] and A12 = 1 during READ commands at T0 and T4
5. DQS-DQS# is held logic low at T9

TRANSITIONING DATA  Don't Care

## Figure 33. READ (BL4) to WRITE (BL4) OTF

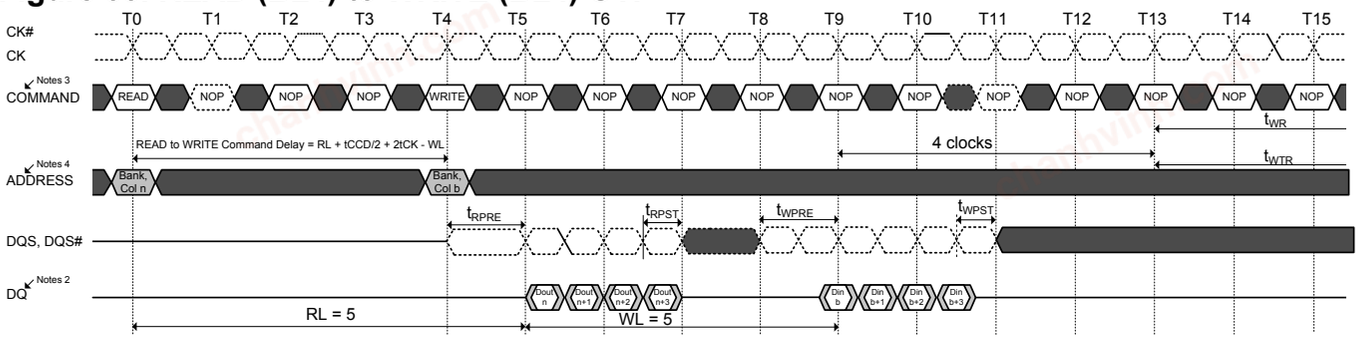


**NOTES:**
1. BC4, RL = 5 (CL = 5, AL = 0), WL = 5 (CWL = 5, AL = 0)
2. DOUT n = data-out from column, DIN b = data-in from column b.
3. NOP commands are shown for ease of illustration; other commands may be valid at these times.
4. BC4 setting activated by MR0[A1:0 = 01] and A12 = 0 during READ command at T0 and WRITE command at T4.

TRANSITIONING DATA  Don't Care

## Figure 34. READ (BL8) to READ (BL4) OTF

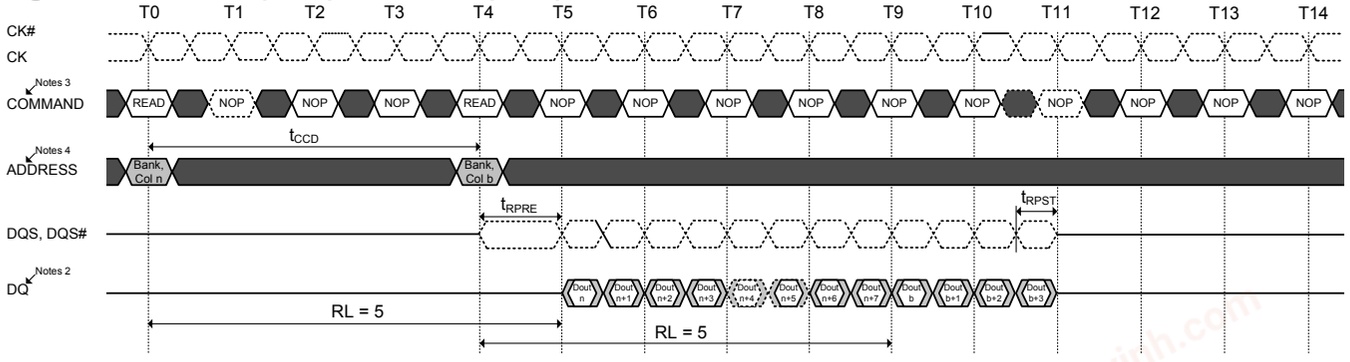


**NOTES:**
1. RL = 5 (CL = 5, AL = 0)
2. DOUT n (or b) = data-out from column n (or column b).
3. NOP commands are shown for ease of illustration; other commands may be valid at these times.
4. BL8 setting activated by MR0[A1:0 = 01] and A12 = 1 during READ command at T0.
   BC4 setting activated by MR0[A1:0 = 01] and A12 = 0 during READ command at T4.

TRANSITIONING DATA  Don't Care

chanhvinh.com



## Figure 35. READ (BL4) to READ (BL8) OTF

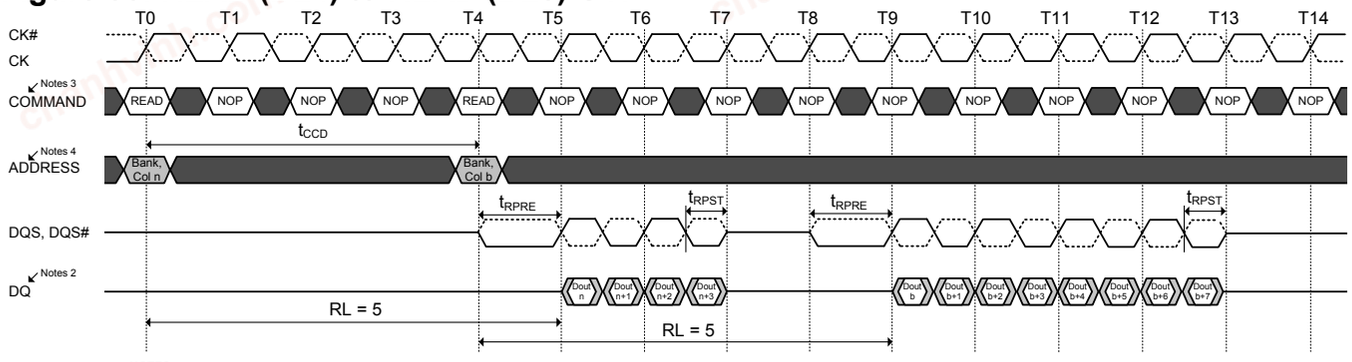


**NOTES:**
1. RL = 5 (CL = 5, AL = 0)
2. DOUT n (or b) = data-out from column n (or column b).
3. NOP commands are shown for ease of illustration; other commands may be valid at these times.
4. BC4 setting activated by MR0[A1:0 = 01] and A12 = 0 during READ command at T0.
   BL8 setting activated by MR0[A1:0 = 01] and A12 = 1 during READ command at T4.

TRANSITIONING DATA  Don't Care

## Figure 36. READ (BC4) to WRITE (BL8) OTF

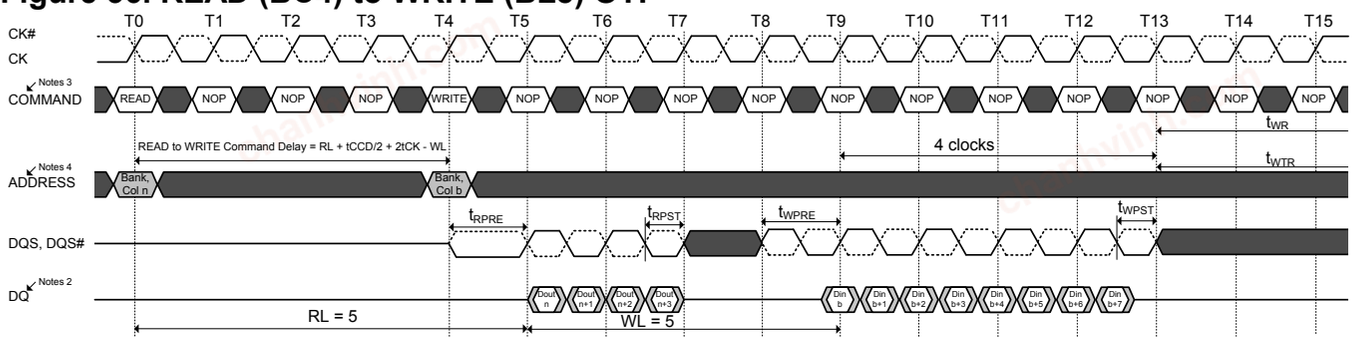


**NOTES:**
1. BC4, RL = 5 (CL = 5, AL = 0), WL = 5 (CWL = 5, AL = 0)
2. DOUT n = data-out from column, DIN b = data-in from column b.
3. NOP commands are shown for ease of illustration; other commands may be valid at these times.
4. BC4 setting activated by MR0[A1:0 = 01] and A12 = 0 during READ command at T0 and WRITE command at T4.

TRANSITIONING DATA  Don't Care

## Figure 37. READ (BL8) to WRITE (BL4) OTF

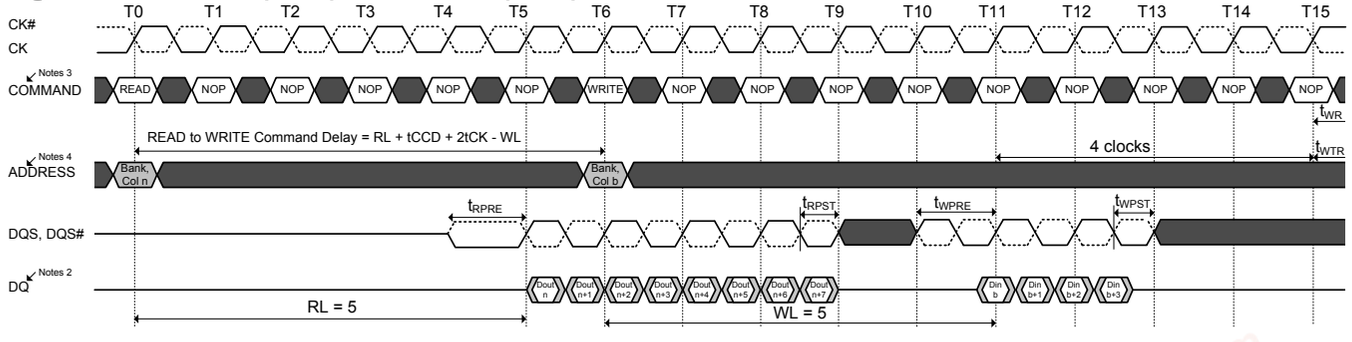


**NOTES:**
1. RL = 5 (CL = 5, AL = 0), WL = 5 (CWL= 5, AL = 0)
2. DOUT n = data-out from column, DIN b = data-in from column b.
3. NOP commands are shown for ease of illustration; other commands may be valid at these times.
4. BL8 setting activated by MR0[A1:0 = 01] and A12 = 1 during READ command at T0.
   BC4 setting activated by MR0[A1:0 = 01] and A12 = 0 during WRITE command at T6.

TRANSITIONING DATA  Don't Care

chanhvinh.com



## Figure 38. READ to PRECHARGE, RL = 5, AL = 0, CL = 5, tRTP = 4, tRP = 5

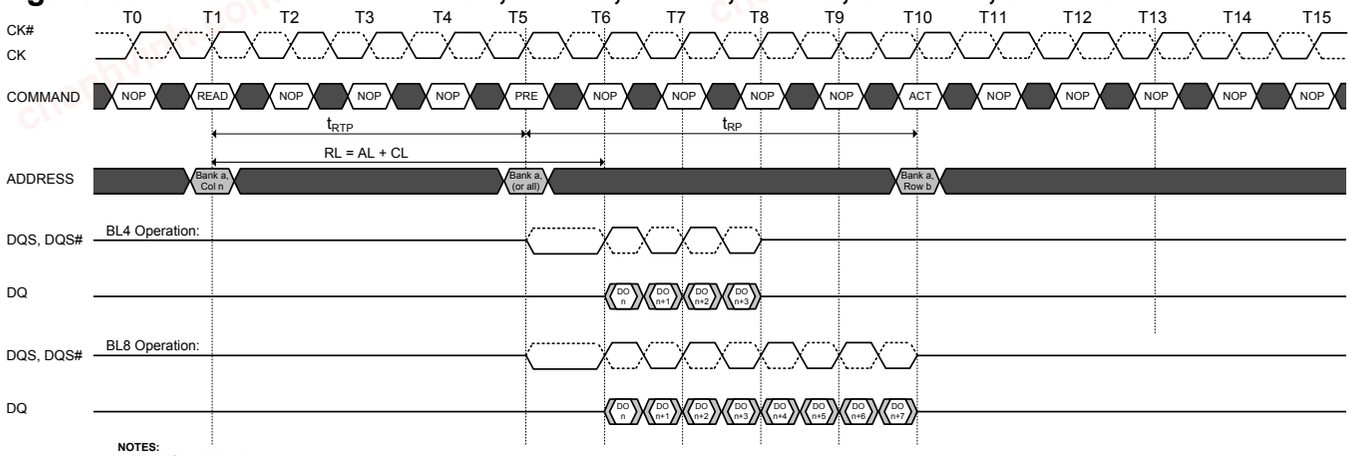


**NOTES:**
1. RL = 5 (CL = 5, AL = 0)
2. DOUT n = data-out from column n.
3. NOP commands are shown for ease of illustration; other commands may be valid at these times.
4. The example assumes tRAS.MIN is satisfied at Precharge command time (T5) and that tRC.MIN is satisfied at the next Active command time (T10).

TRANSITIONING DATA  Don't Care

## Figure 39. READ to PRECHARGE, RL = 8, AL = CL-2, CL = 5, tRTP = 6, tRP = 5

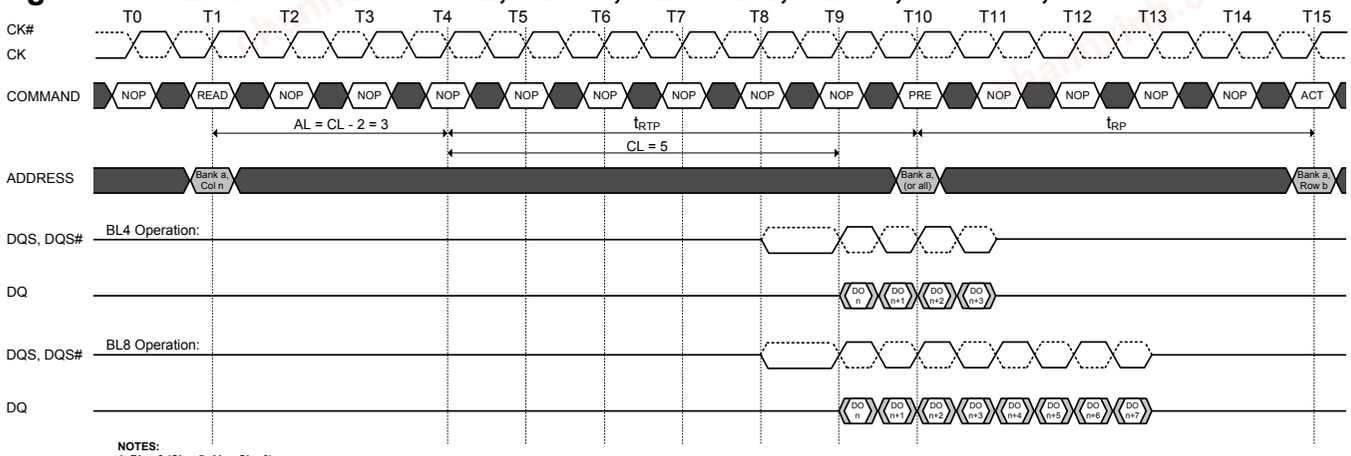


**NOTES:**
1. RL = 8 (CL = 5, AL = CL - 2)
2. DOUT n = data-out from column n.
3. NOP commands are shown for ease of illustration; other commands may be valid at these times.
4. The example assumes tRAS.MIN is satisfied at Precharge command time (T10) and that tRC.MIN is satisfied at the next Active command time (T15).

TRANSITIONING DATA  Don't Care

chanhvinh.com



## Figure 40. Write Timing Definition and parameters

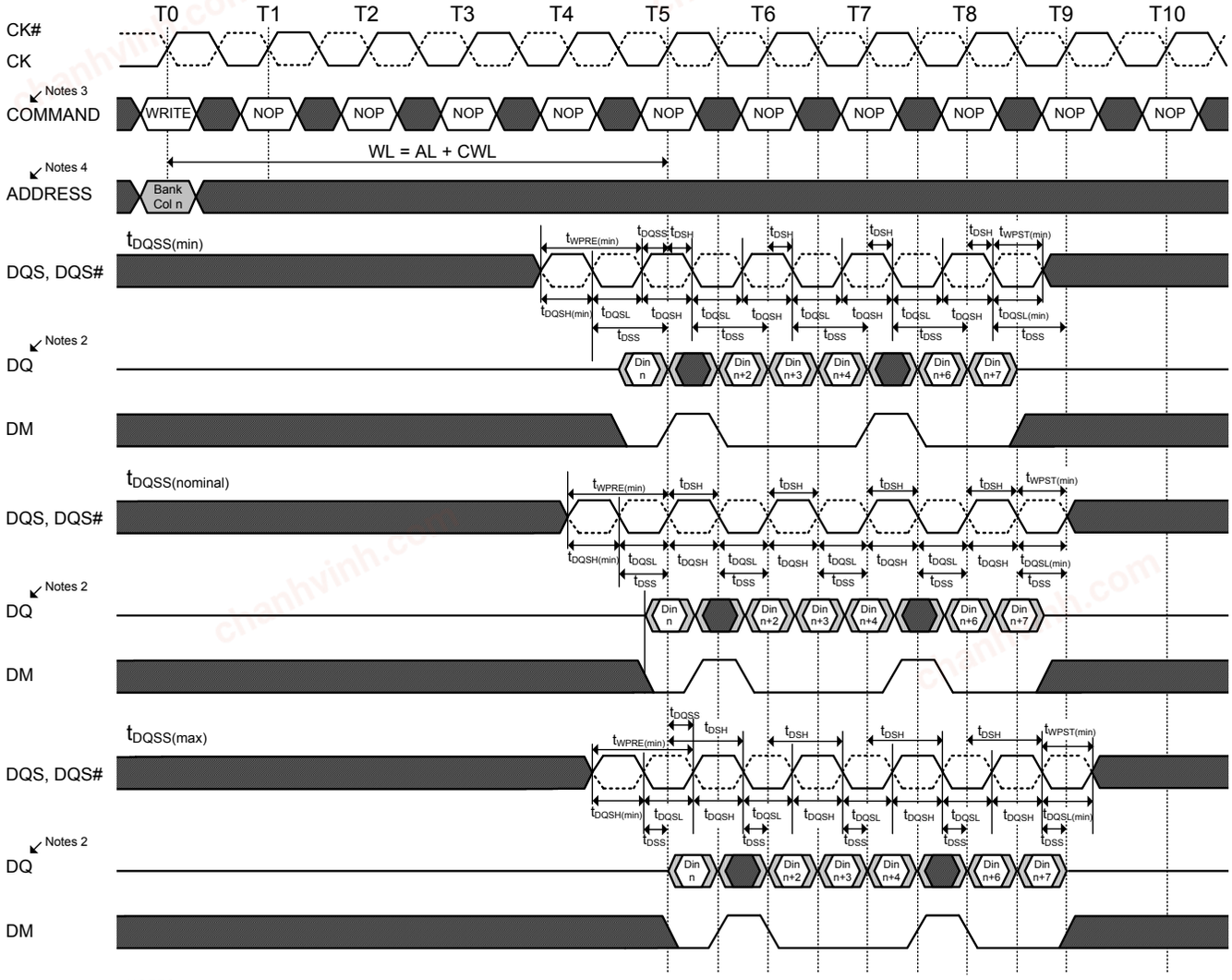


**NOTES:**
1. BL8, WL = 5 (AL = 0, CWL = 5)
2. DIN n = data-in from column n.
3. NOP commands are shown for ease of illustration; other commands may be valid at these times.
4. BL8 setting activated by either MR0[A1:0 = 00] or MR0[A1:0 = 01] and A12 = 1 during WRITE command at T0.
5. tDQSS must be met at each rising clock edge.

TRANSITIONING DATA  Don't Care

chanhvinh.com



## Figure 41. WRITE Burst Operation WL = 5 (AL = 0, CWL = 5, BL8)

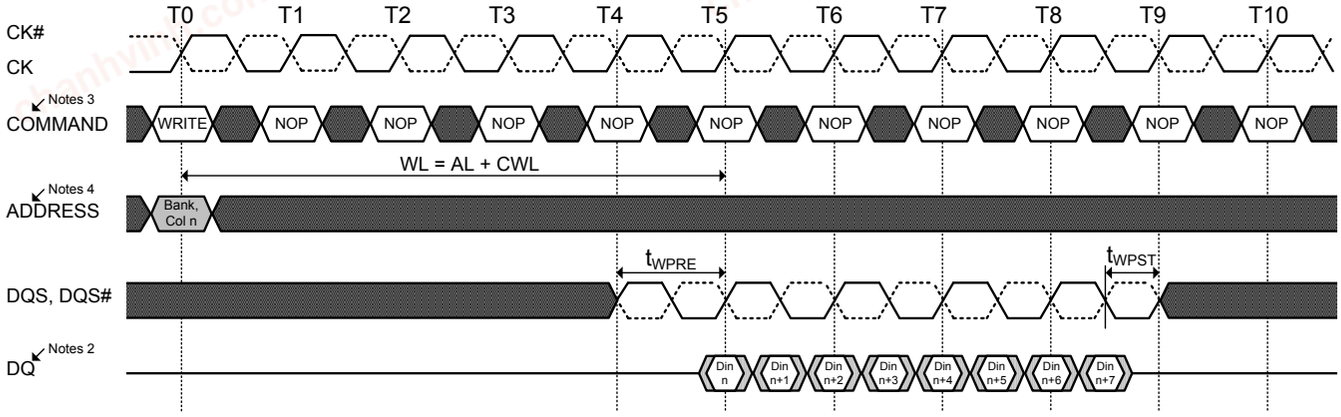


**NOTES:**
1. BL8, WL = 5; AL = 0, CWL = 5.
2. DIN n = data-in from column n.
3. NOP commands are shown for ease of illustration; other commands may be valid at these times.
4. BL8 setting activated by either MR0[A1:0 = 00] or MR0[A1:0 = 01] and A12 = 1 during WRITE command at T0.

TRANSITIONING DATA  Don't Care

## Figure 42. WRITE Burst Operation WL = 9 (AL = CL-1, CWL = 5, BL8)

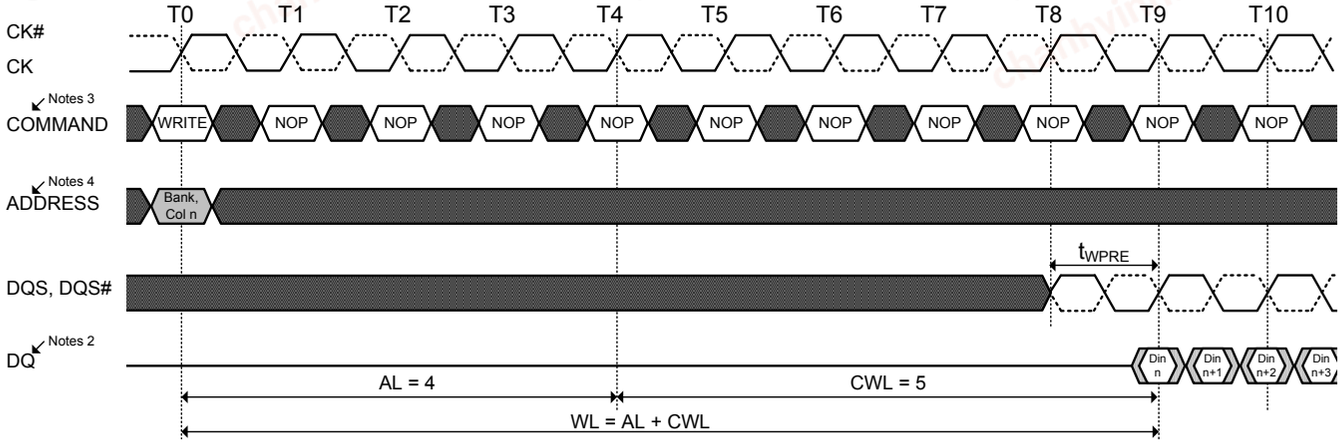


**NOTES:**
1. BL8, WL = 9; AL = (CL - 1), CL = 5, CWL = 5.
2. DIN n = data-in from column n.
3. NOP commands are shown for ease of illustration; other commands may be valid at these times.
4. BL8 setting activated by either MR0[A1:0 = 00] or MR0[A1:0 = 01] and A12 = 1 during WRITE command at T0.

TRANSITIONING DATA  Don't Care

chanhvinh.com



## Figure 43. WRITE(BC4) to READ (BC4) operation

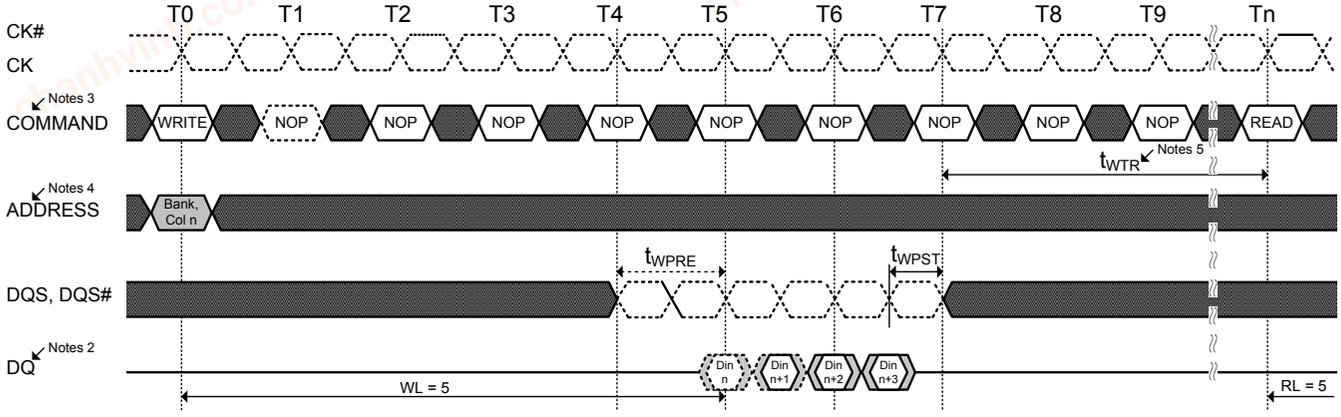


**NOTES:**
1. BC4, WL = 5, RL = 5.
2. DIN n = data-in from column n.
3. NOP commands are shown for ease of illustration; other commands may be valid at these times.
4. BC4 setting activated by MR0[A1:0 = 10] during WRITE command at T0 and READ command at Tn.
5. tWTR controls the write to read delay to the same device and starts with the first rising clock edge after the last write data shown at T7.

TIME BREAK | TRANSITIONING DATA | Don't Care

## Figure 44. WRITE(BC4) to Precharge Operation

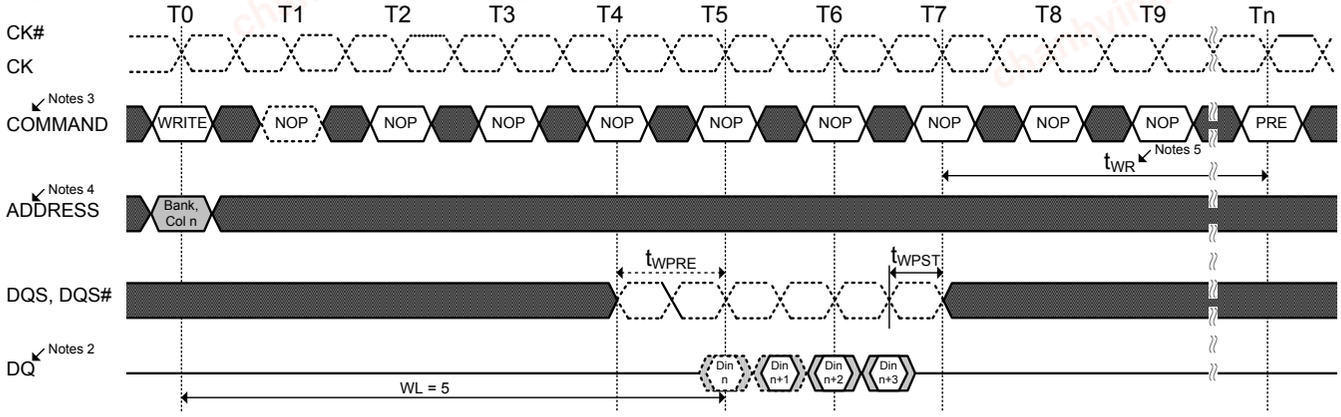


**NOTES:**
1. BC4, WL = 5, RL = 5.
2. DIN n = data-in from column n.
3. NOP commands are shown for ease of illustration; other commands may be valid at these times.
4. BC4 setting activated by MR0[A1:0 = 10] during WRITE command at T0.
5. The write recovery time (tWR) referenced from the first rising clock edge after the last write data shown at T7.
tWR specifies the last burst write cycle until the precharge command can be issued to the same bank .

TIME BREAK | TRANSITIONING DATA | Don't Care

## Figure 45. WRITE(BC4) OTF to Precharge operation

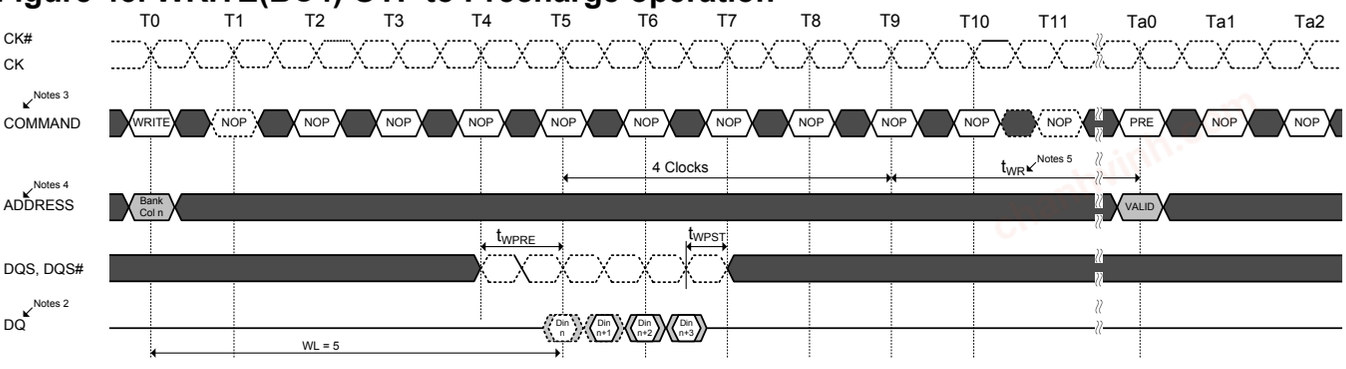


**NOTES:**
1. BC4 OTF, WL = 5 (CWL = 5, AL = 0)
2. DIN n (or b) = data-in from column n.
3. NOP commands are shown for ease of illustration; other commands may be valid at these times.
4. BC4 OTF setting activated by MR0[A1:0 = 01] and A12 = 0 during WRITE command at T0.
5. The write recovery time (tWR) starts at the rising clock edge T9 (4 clocks from T5).

TIME BREAK | TRANSITIONING DATA | Don't Care

chanhvinh.com



## Figure 46. WRITE(BC8) to WRITE(BC8)

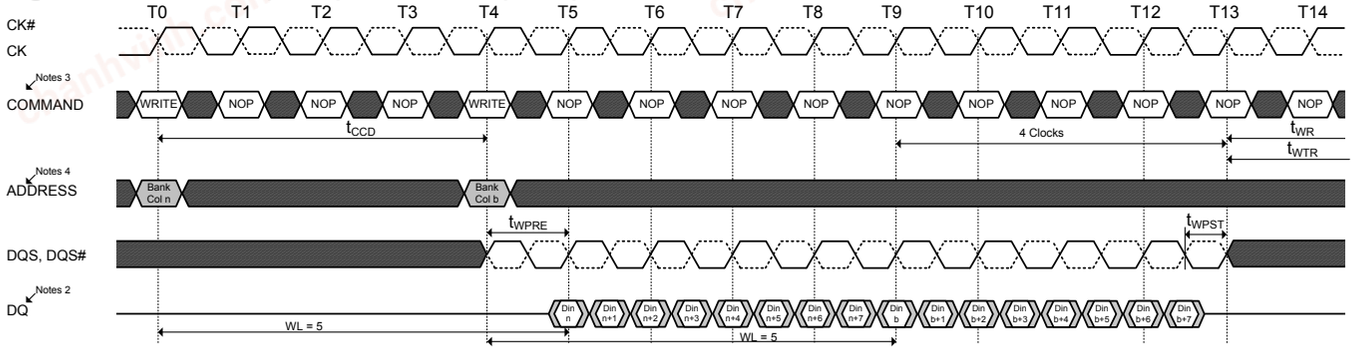


**NOTES:**
1. BL8, WL = 5 (CWL = 5, AL = 0)
2. DIN n (or b) = data-in from column n (or column b).
3. NOP commands are shown for ease of illustration; other commands may be valid at these times.
4. BL8 setting activated by either MR0[A1:0 = 00] or MR0[A1:0 = 01] and A12 = 1 during WRITE command at T0 and T4.
5. The write recovery time (tWR) and write timing parameter (tWTR) are referenced from the first rising clock edge after the last write data shown at T13.

TRANSITIONING DATA Don't Care

## Figure 47. WRITE(BC4) to WRITE(BC4) OTF

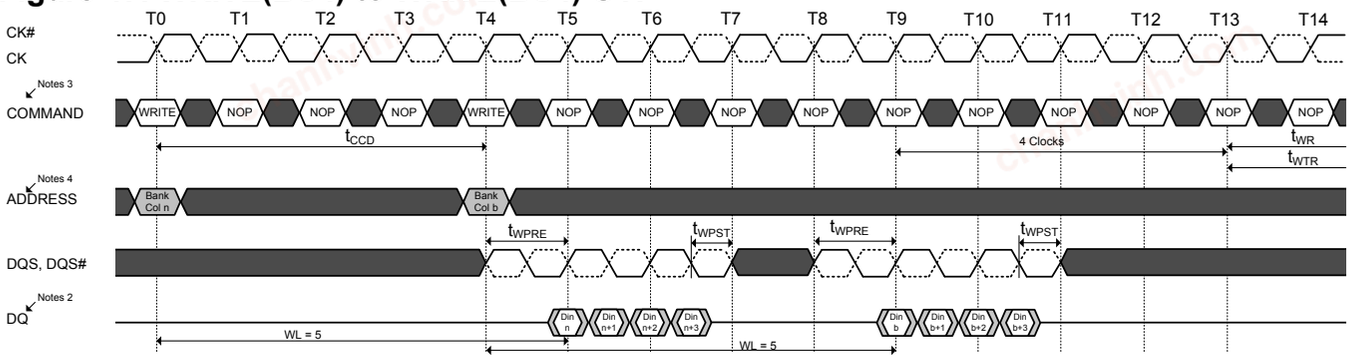


**NOTES:**
1. BC4, WL = 5 (CWL = 5, AL = 0)
2. DIN n (or b) = data-in from column n (or column b).
3. NOP commands are shown for ease of illustration; other commands may be valid at these times.
4. BC4 setting activated by MR0[A1:0 = 01] and A12 = 0 during WRITE command at T0 and T4.
5. The write recovery time (tWR) and write timing parameter (tWTR) are referenced from the first rising clock edge at T13 (4 clocks from T9).

TRANSITIONING DATA Don't Care

## Figure 48. WRITE(BC8) to READ(BC4,BC8) OTF

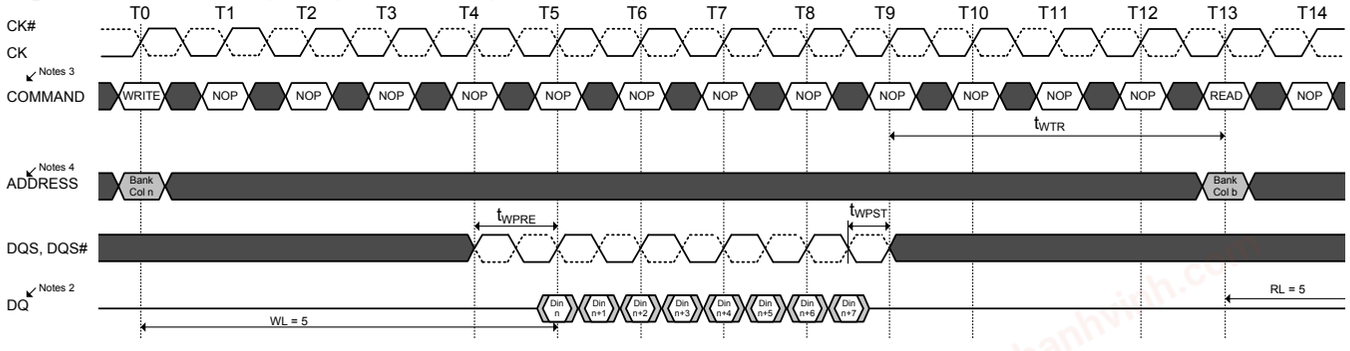


**NOTES:**
1. RL = 5 (CL = 5, AL = 0), WL = 5 (CWL = 5, AL = 0)
2. DIN n = data-in from column n; DOUT b = data-out from column b.
3. NOP commands are shown for ease of illustration; other commands may be valid at these times.
4. BL8 setting activated by either MR0[A1:0 = 00] or MR0[A1:0 = 01] and A12 = 1 during WRITE command at T0.
READ command at T13 can be either BC4 or BL8 depending on MR0[A1:0] and A12 status at T13.

TRANSITIONING DATA Don't Care

chanhvinh.com



## Figure 49. WRITE(BC4) to READ(BC4,BC8) OTF

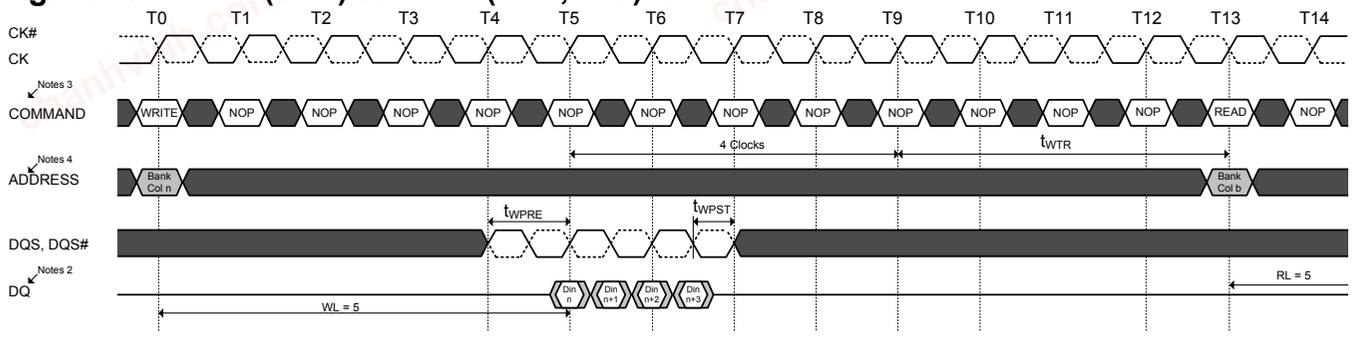


**NOTES:**
1. RL = 5 (CL = 5, AL = 0), WL = 5 (CWL =5, AL = 0)
2. DIN n = data-in from column n; DOUT b = data-out from column b.
3. NOP commands are shown for ease of illustration; other commands may be valid at these times.
4. BC4 setting activated by MR0[A1:0 = 01] and A12 = 0 during WRITE command at T0.
READ command at T13 can be either BC4 or BL8 depending on A12 status at T13.

TRANSITIONING DATA  Don't Care

## Figure 50. WRITE(BC4) to READ(BC4)

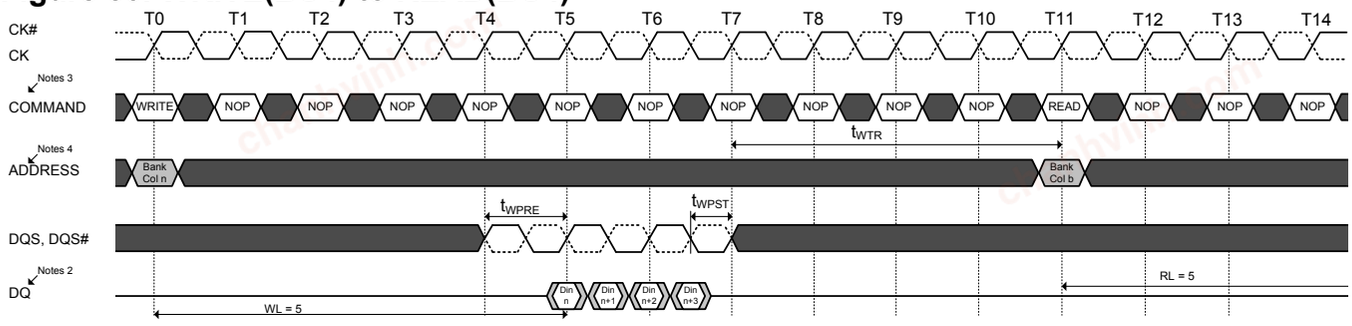


**NOTES:**
1. RL = 5 (CL = 5, AL = 0), WL = 5 (CWL =5, AL = 0)
2. DIN n = data-in from column n; DOUT b = data-out from column b.
3. NOP commands are shown for ease of illustration; other commands may be valid at these times.
4. BC4 setting activated by MR0[A1:0 = 10].

TRANSITIONING DATA  Don't Care

## Figure 51. WRITE(BC8) to WRITE(BC4) OTF

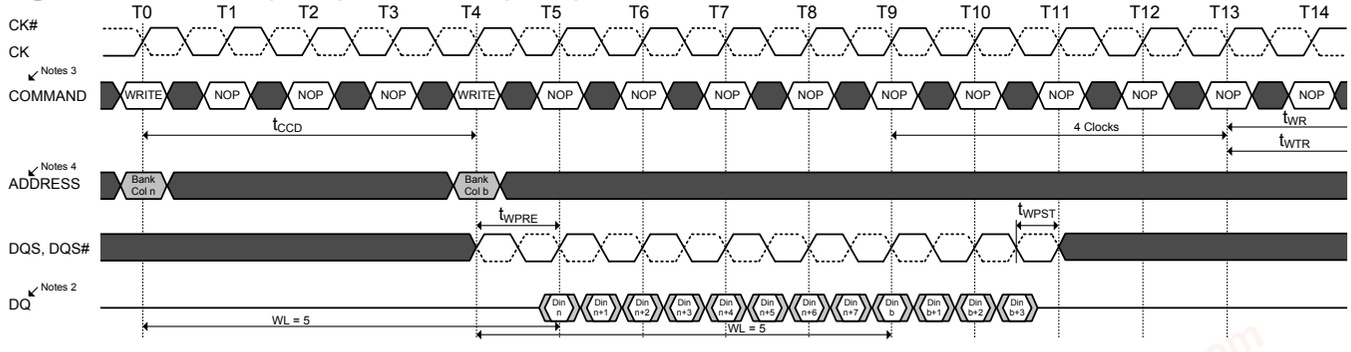


**NOTES:**
1. WL = 5 (CWL = 5, AL = 0)
2. DIN n (or b) = data-in from column n (or column b).
3. NOP commands are shown for ease of illustration; other commands may be valid at these times.
4. BL8 setting activated by MR0[A1:0 = 01] and A12 = 1 during WRITE command at T0.
BC4 setting activated by MR0[A1:0 = 01] and A12 = 0 during WRITE command at T4.

TRANSITIONING DATA  Don't Care

chanhvinh.com



## Figure 52. WRITE(BC4) to WRITE(BC8) OTF

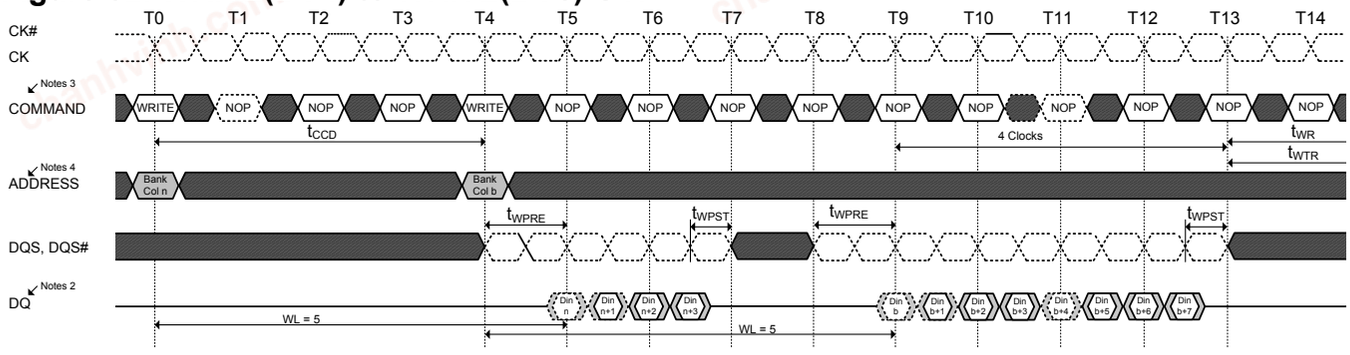


**NOTES:**
1. WL = 5 (CWL = 5, AL = 0)
2. DIN n (or b) = data-in from column n (or column b).
3. NOP commands are shown for ease of illustration; other commands may be valid at these times.
4. BC4 setting activated by MR0[A1:0 = 01] and A12 = 0 during WRITE command at T0.
   BL8 setting activated by MR0[A1:0 = 01] and A12 = 1 during WRITE command at T4.

TRANSITIONING DATA  Don't Care

## Figure 53. Refresh Command Timing

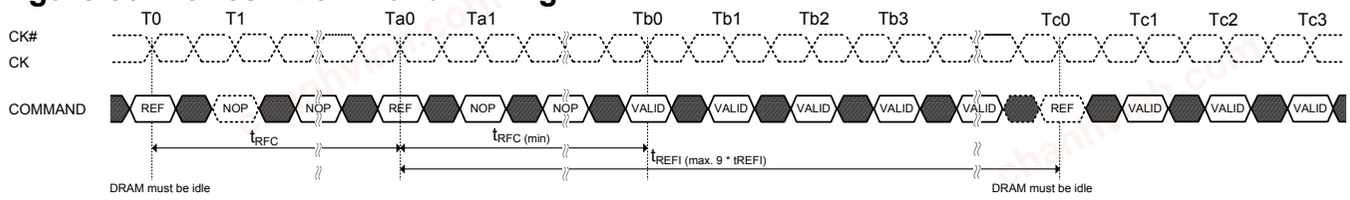


**NOTES:**
1. Only NOP/DES commands allowed after Refresh command registered until tRFC(min) expires.
2. Time interval between two Refresh commands may be extended to a maximum of 9 x tREFI.

TIME BREAK  TRANSITIONING DATA  Don't Care

## Figure 54. Self-Refresh Entry/Exit Timing

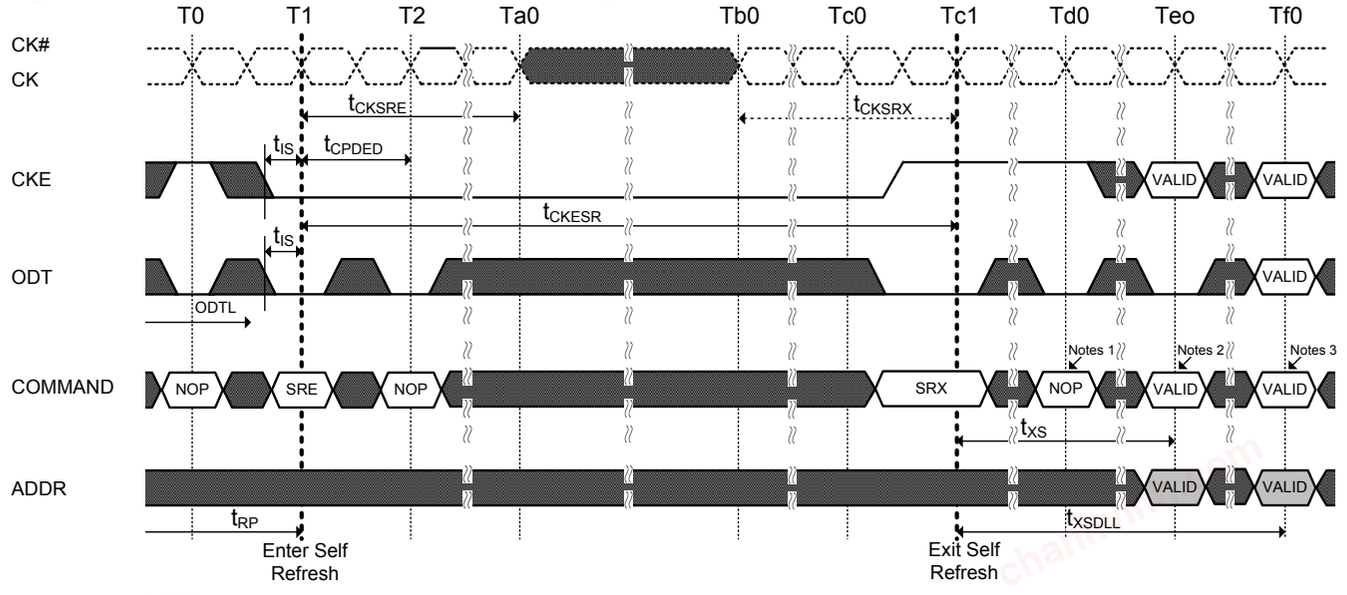


**NOTES:**
1. Only NOP or DES command.
2. Valid commands not requiring a locked DLL.
3. Valid commands requiring a locked DLL.

TIME BREAK  Don't Care

chanhvinh.com



## Figure 55. Active Power-Down Entry and Exit Timing Diagram

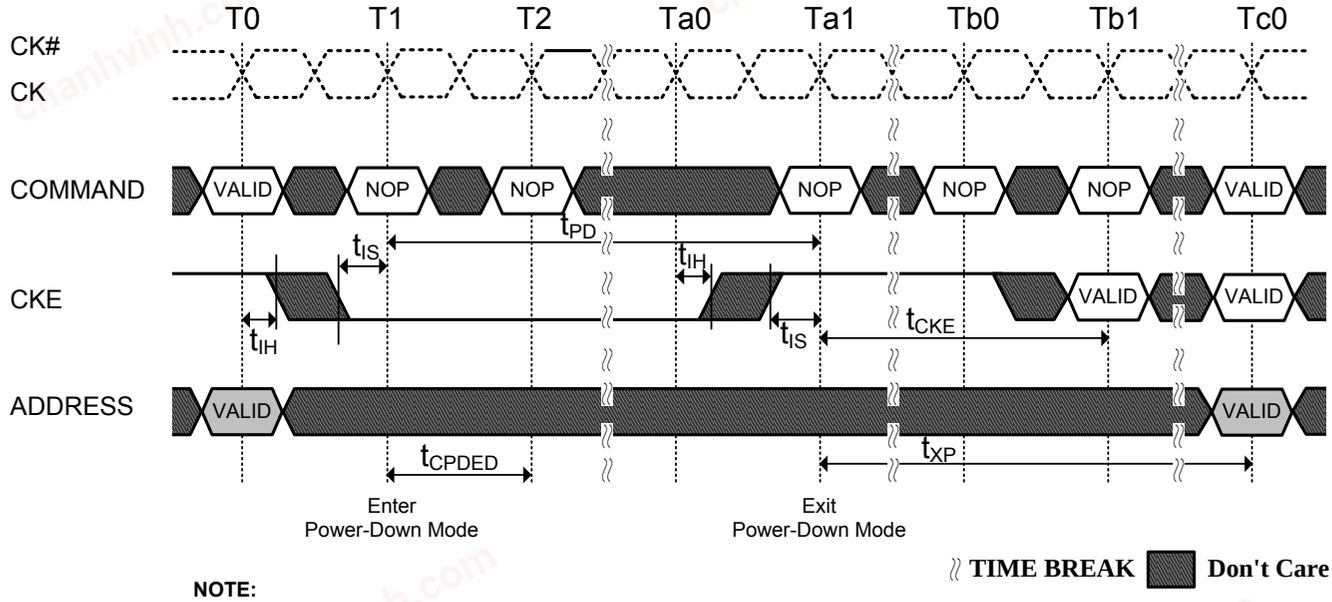


**NOTE:**
**VALID command at T0 is ACT, NOP, DES or PRE with still one bank remaining open after completion of the precharge command.**

## Figure 56. Power-Down Entry after Read and Read with Auto Precharge

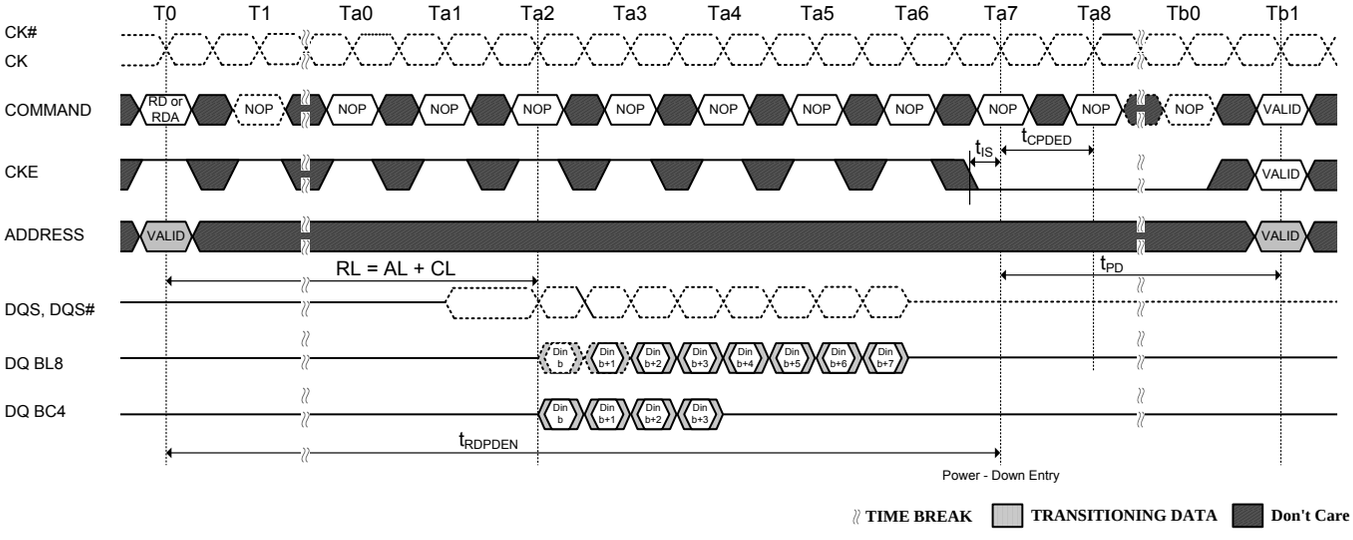

chanhvinh.com



## Figure 57. Power-Down Entry after Write with Auto Precharge

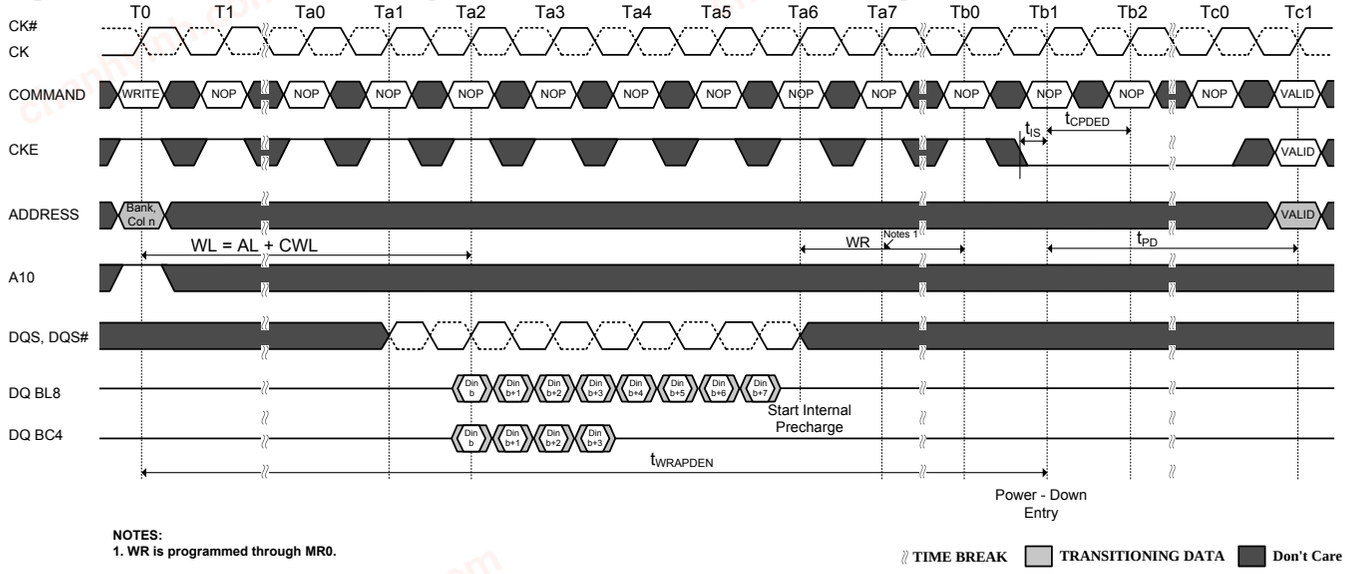


**NOTES:**
**1. WR is programmed through MR0.**

## Figure 58. Power-Down Entry after Write

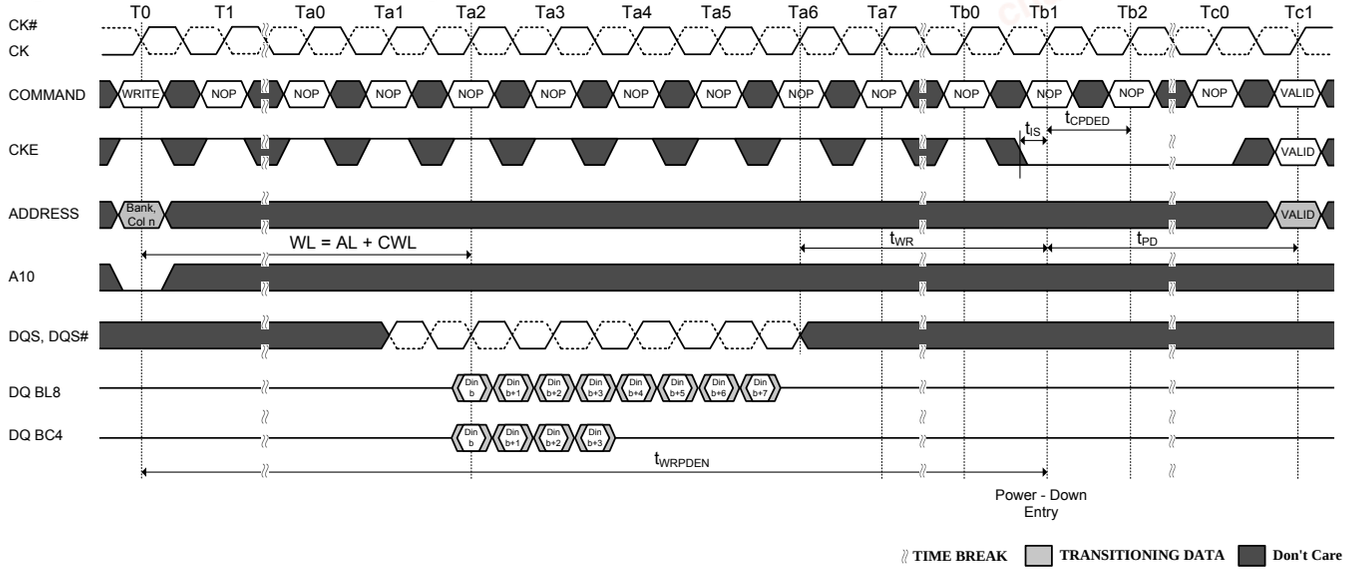

chanhvinh.com



**Figure 59. Precharge Power-Down (Fast Exit Mode) Entry and Exit**

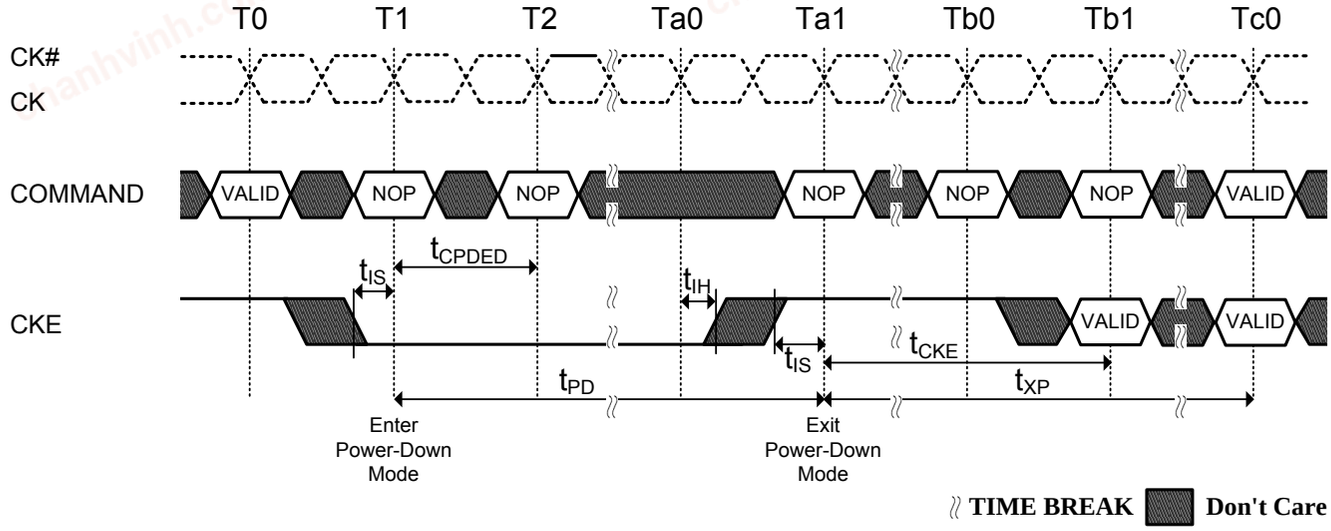


**Figure 60. Precharge Power-Down (Slow Exit Mode) Entry and Exit**

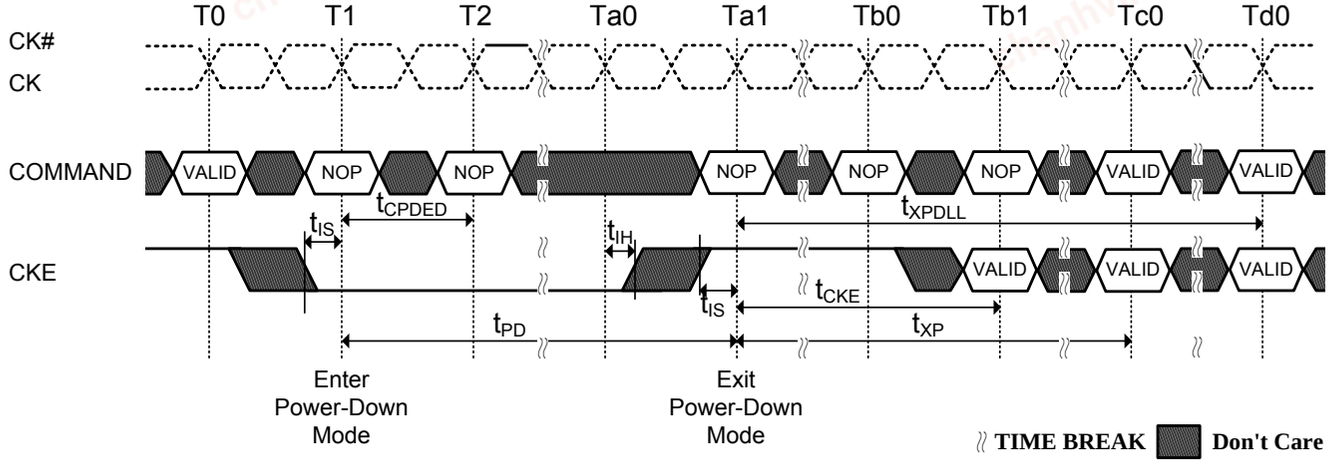

chanhvinh.com



**Figure 61. Refresh Command to Power-Down Entry**

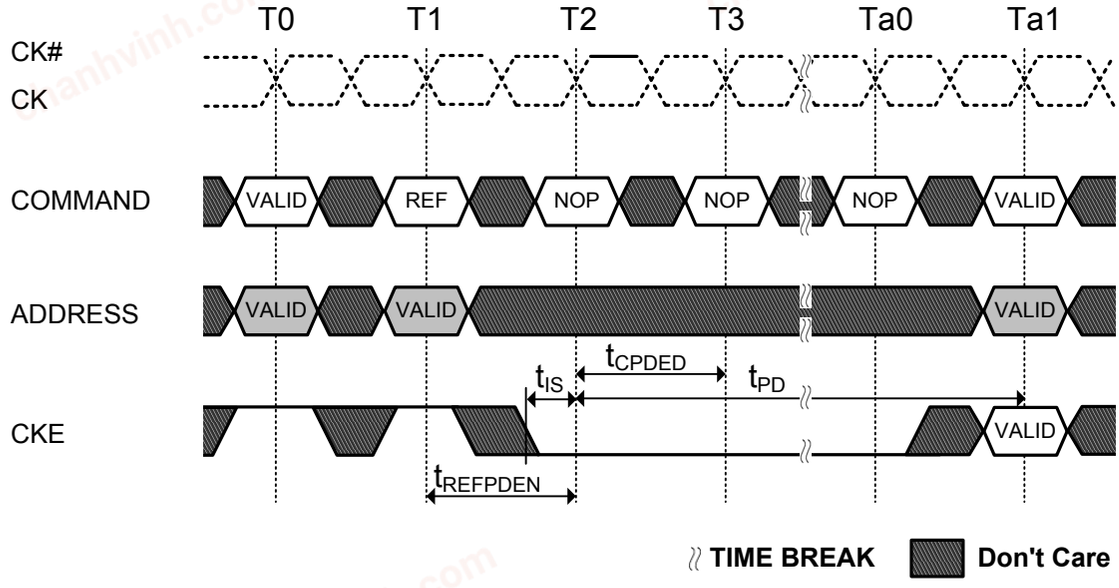


**Figure 62. Active Command to Power-Down Entry**

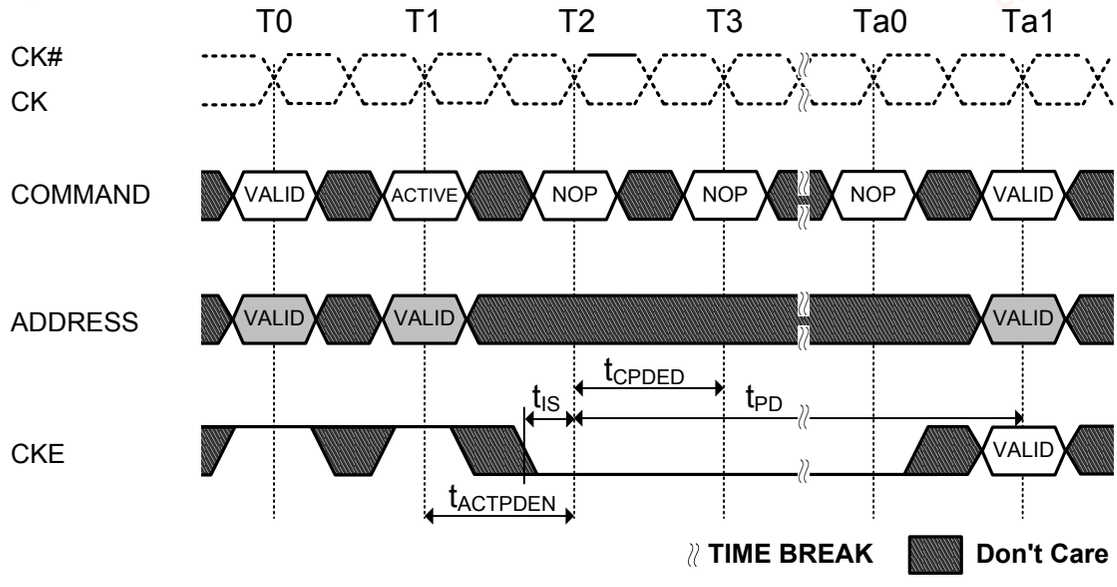

chanhvinh.com



**Figure 63. Precharge, Precharge all command to Power-Down Entry**

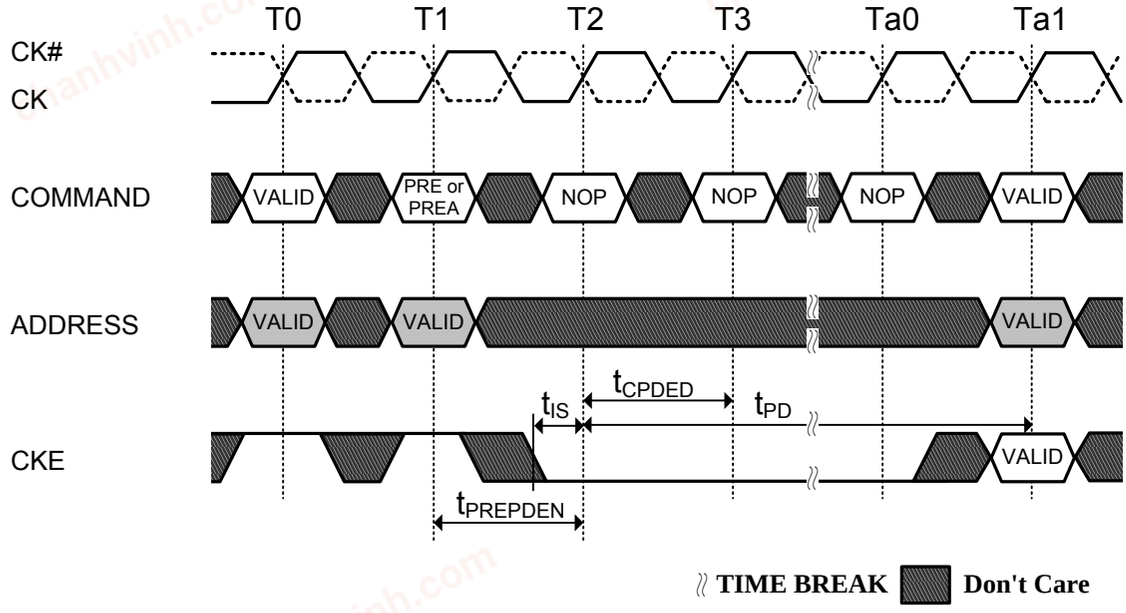


**Figure 64. MRS Command to Power-Down Entry**

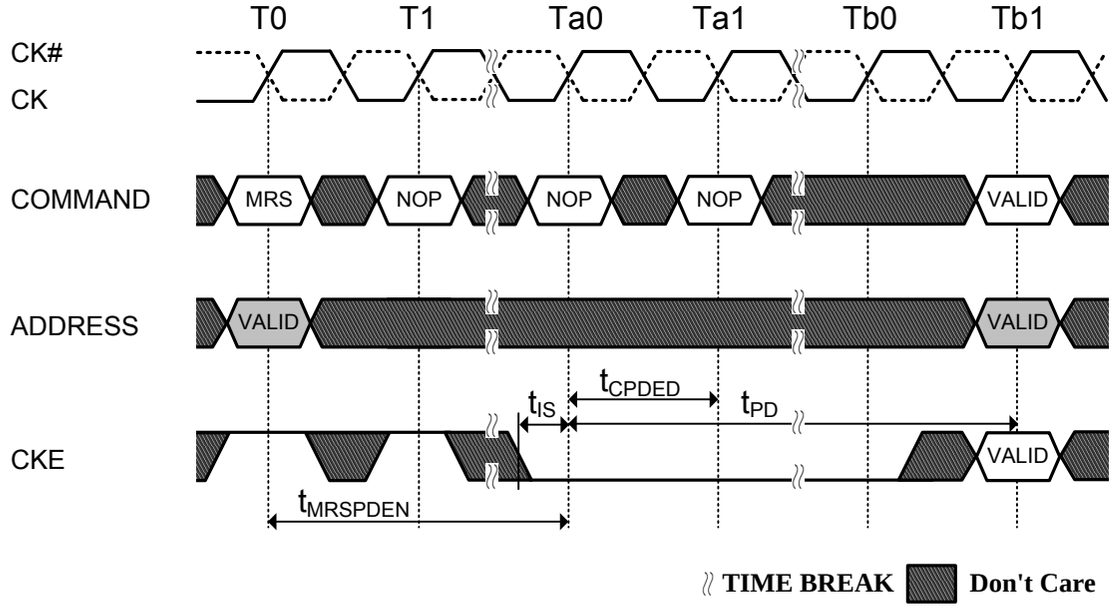

chanhvinh.com



## Figure 65. Synchronous ODT Timing Example

**(AL = 3; CWL = 5; ODTLon = AL + CWL - 2 = 6; ODTLoff = AL + CWL - 2 = 6)**

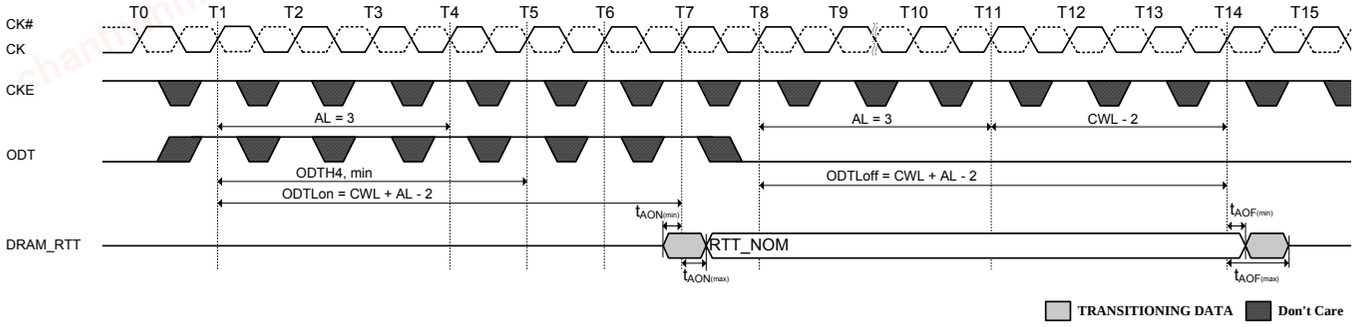


## Figure 66. Synchronous ODT example with BL = 4, WL = 7

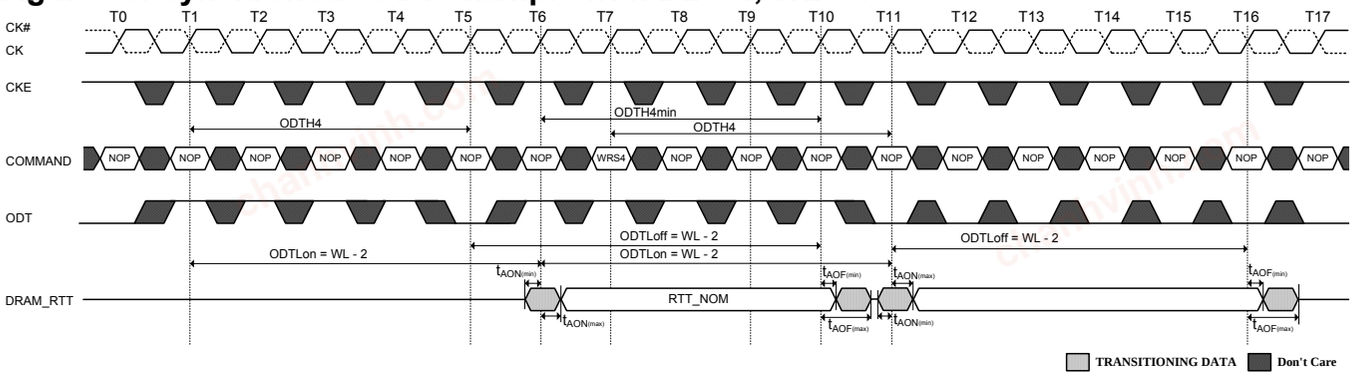


## Figure 67. Dynamic ODT Behavior with ODT being asserted before and after the write

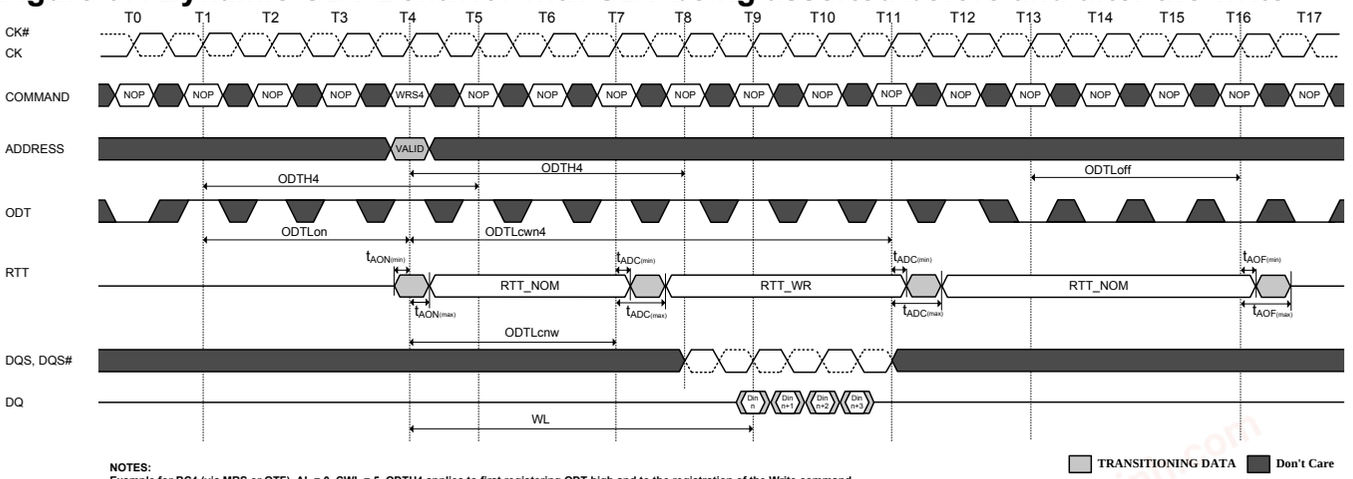


**NOTES:**
**Example for BC4 (via MRS or OTF), AL = 0, CWL = 5. ODTH4 applies to first registering ODT high and to the registration of the Write command.**
**In this example, ODTH4 would be satisfied if ODT went low at T8 (4 clocks after the Write command).**

chanhvinh.com



## Figure 68. Dynamic ODT: Behavior without write command, AL = 0, CWL = 5

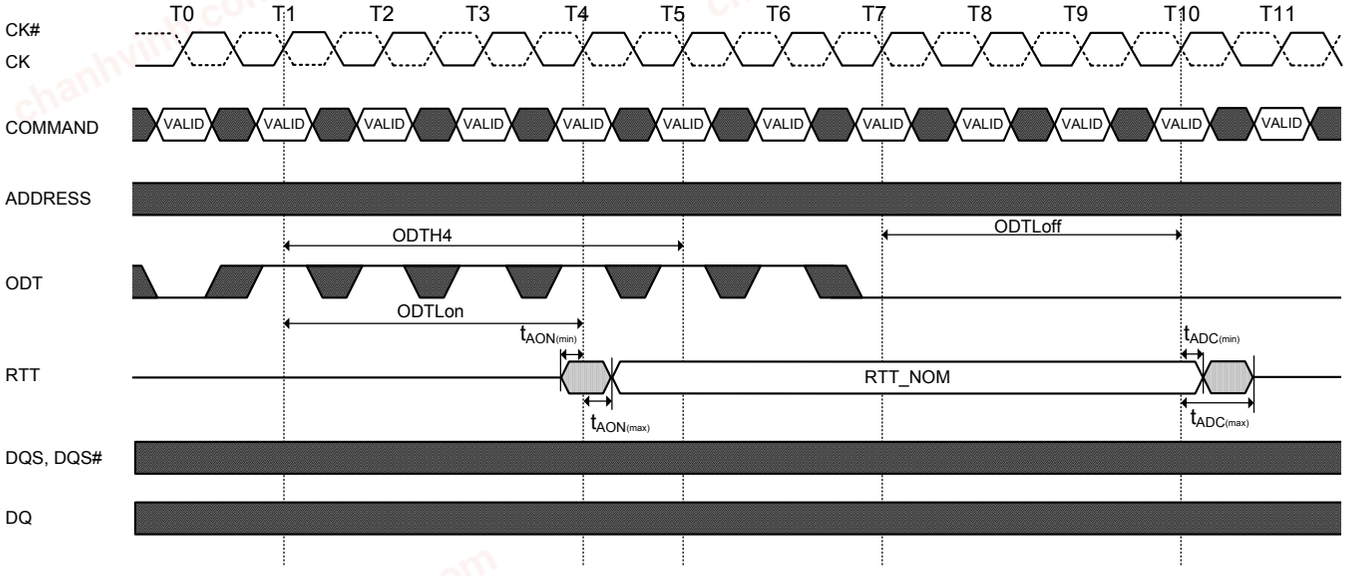


**NOTES:**
**1. ODTH4 is defined from ODT registered high to ODT registered low, so in this example, ODTH4 is satisfied.**
**2. ODT registered low at T5 would also be legal.**

**TRANSITIONING DATA** **Don't Care**

## Figure 69. Dynamic ODT: Behavior with ODT pin being asserted together with write command for a duration of 6 clock cycles

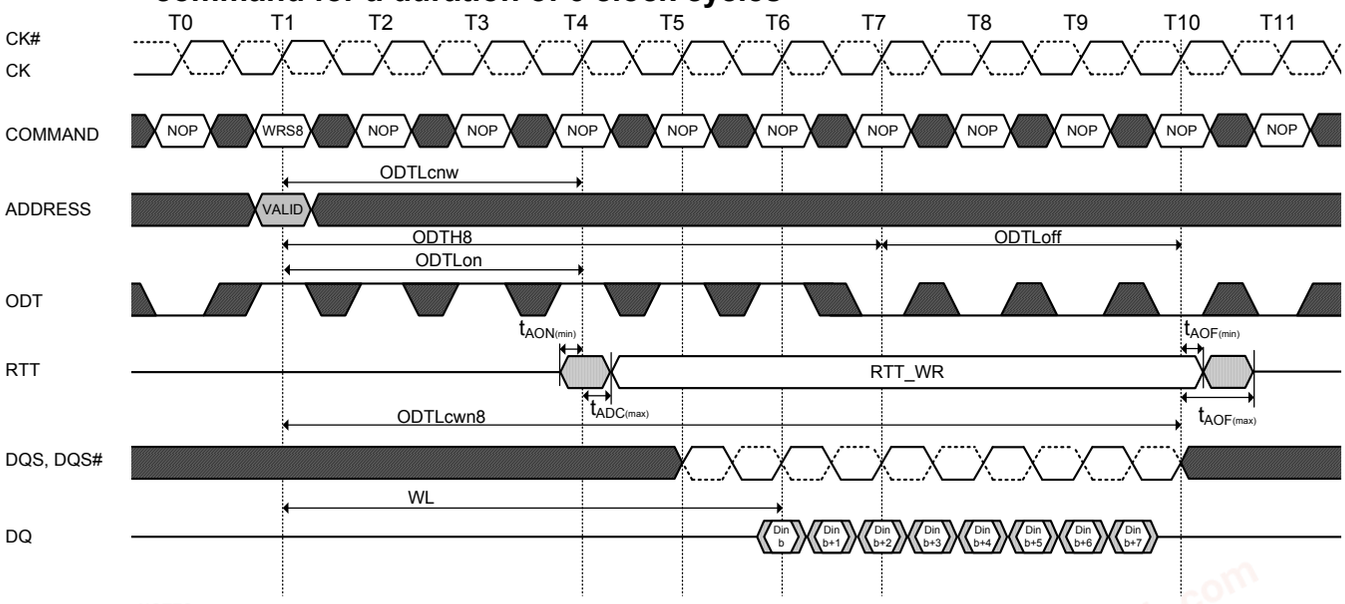


**NOTES:**
**Example for BL8 (via MRS or OTF), AL = 0, CWL = 5. In this example, ODTH8 = 6 is exactly satisfied.**

**TRANSITIONING DATA** **Don't Care**

chanhvinh.com



**Figure 70. Dynamic ODT: Behavior with ODT pin being asserted together with write command for a duration of 6 clock cycles, example for BC4 (via MRS or OTF), AL = 0, CWL = 5.**

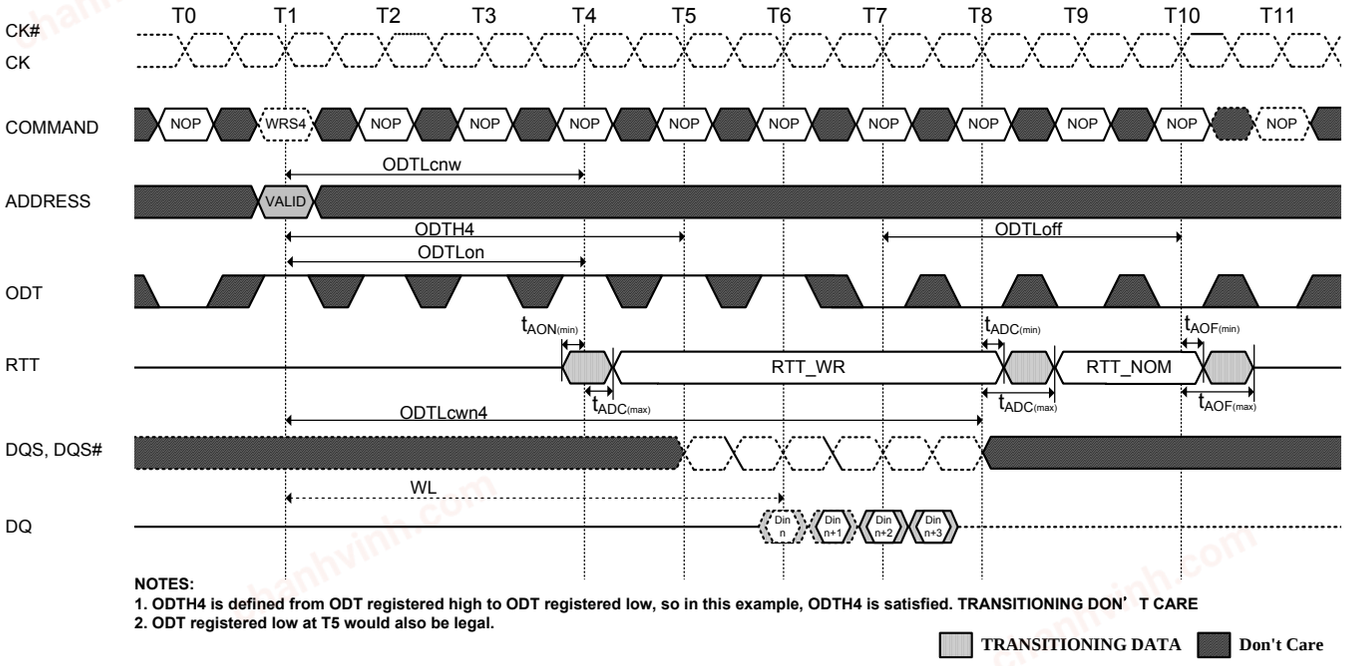


**NOTES:**
**1. ODTH4 is defined from ODT registered high to ODT registered low, so in this example, ODTH4 is satisfied. TRANSITIONING DON' T CARE**
**2. ODT registered low at T5 would also be legal.**

TRANSITIONING DATA  Don't Care

**Figure 71. Dynamic ODT: Behavior with ODT pin being asserted together with write command for a duration of 4 clock cycles**

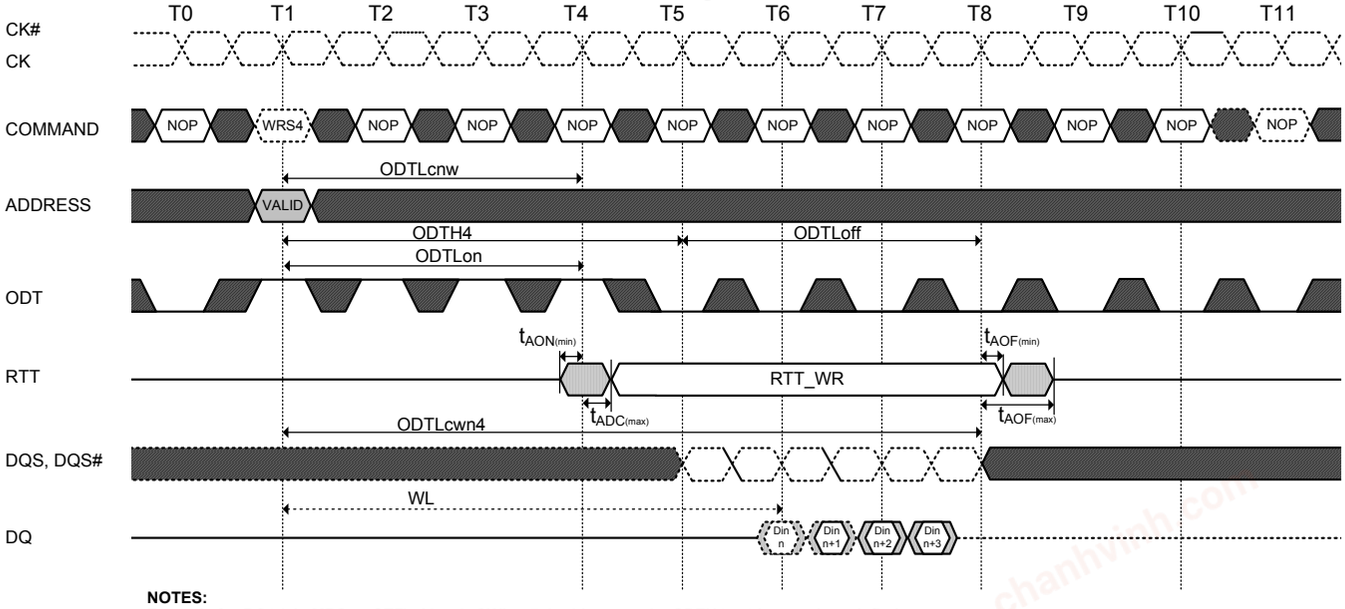


**NOTES:**
**Example for BC4 (via MRS or OTF), AL = 0, CWL = 5. In this example, ODTH4 = 4 is exactly satisfied.**

TRANSITIONING DATA  Don't Care

chanhvinh.com



## Figure 72. Asynchronous ODT Timings on DDR3L SDRAM with fast ODT transition

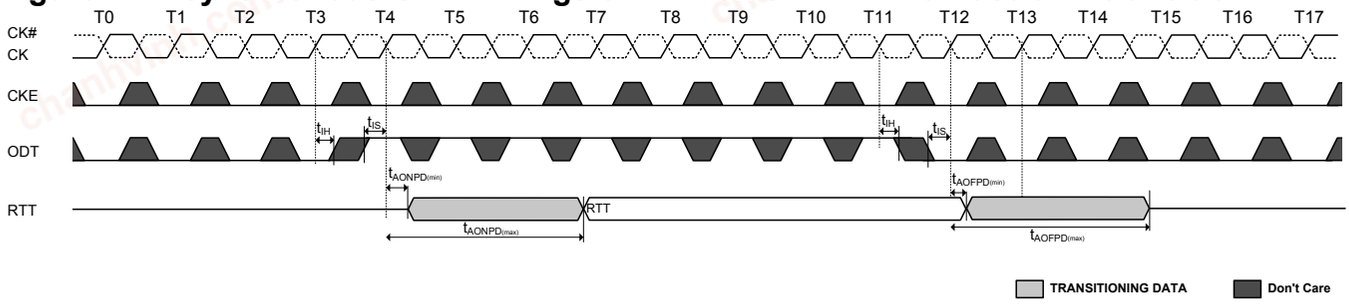


## Figure 73. Synchronous to asynchronous transition during Precharge Power Down (with DLL frozen) entry (AL = 0; CWL = 5; tANPD = WL - 1 = 4)

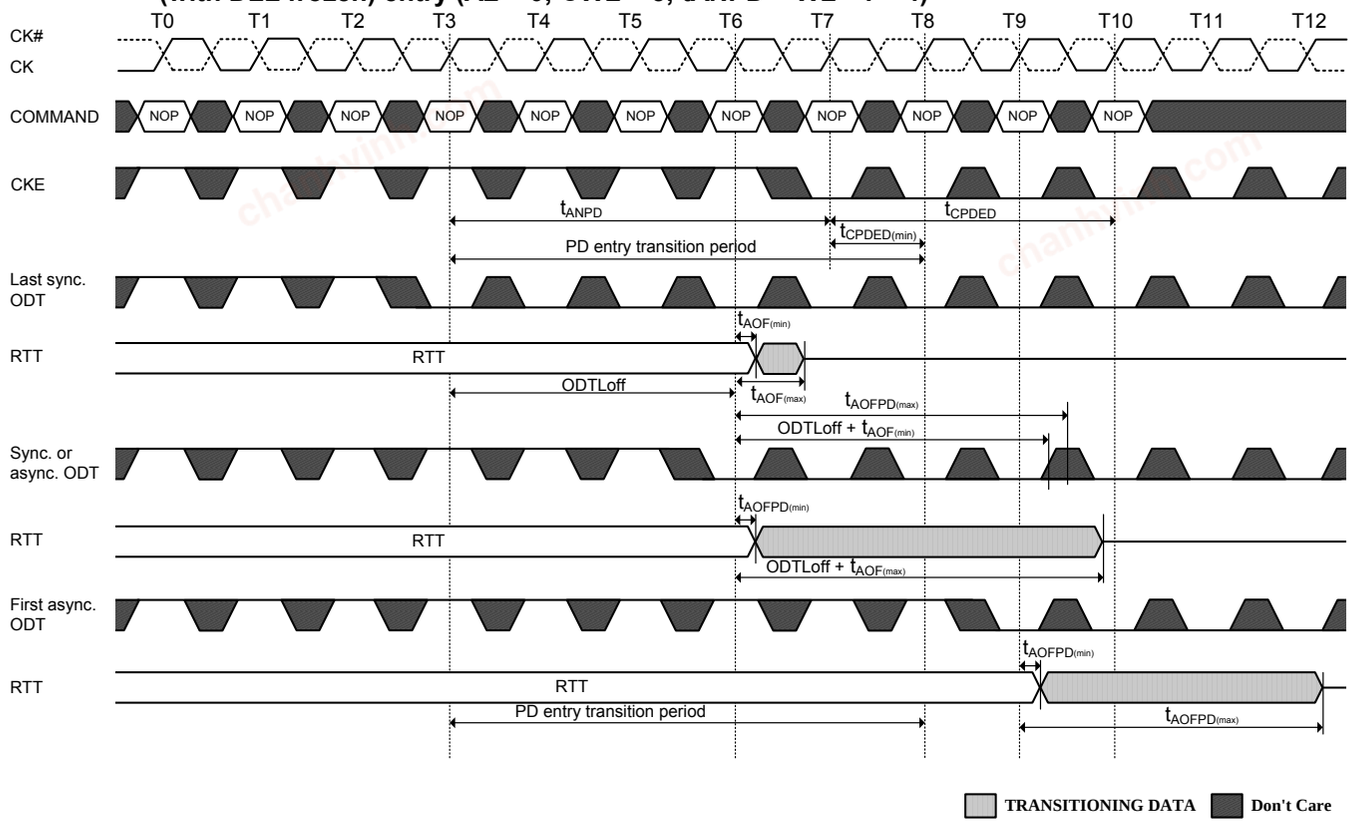

chanhvinh.com



## Figure 74. Synchronous to asynchronous transition after Refresh command (AL = 0; CWL = 5; tANPD = WL - 1 = 4)

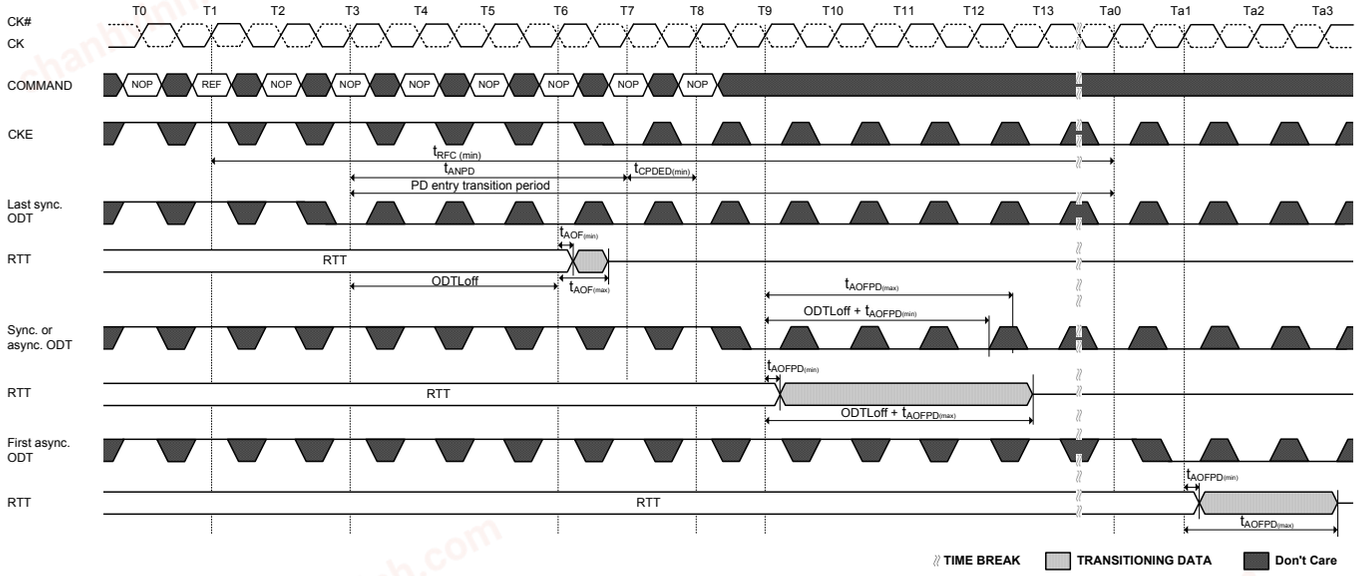


## Figure 75. Asynchronous to synchronous transition during Precharge Power Down (with DLL frozen) exit (CL = 6; AL = CL - 1; CWL = 5; tANPD = WL - 1 = 9)

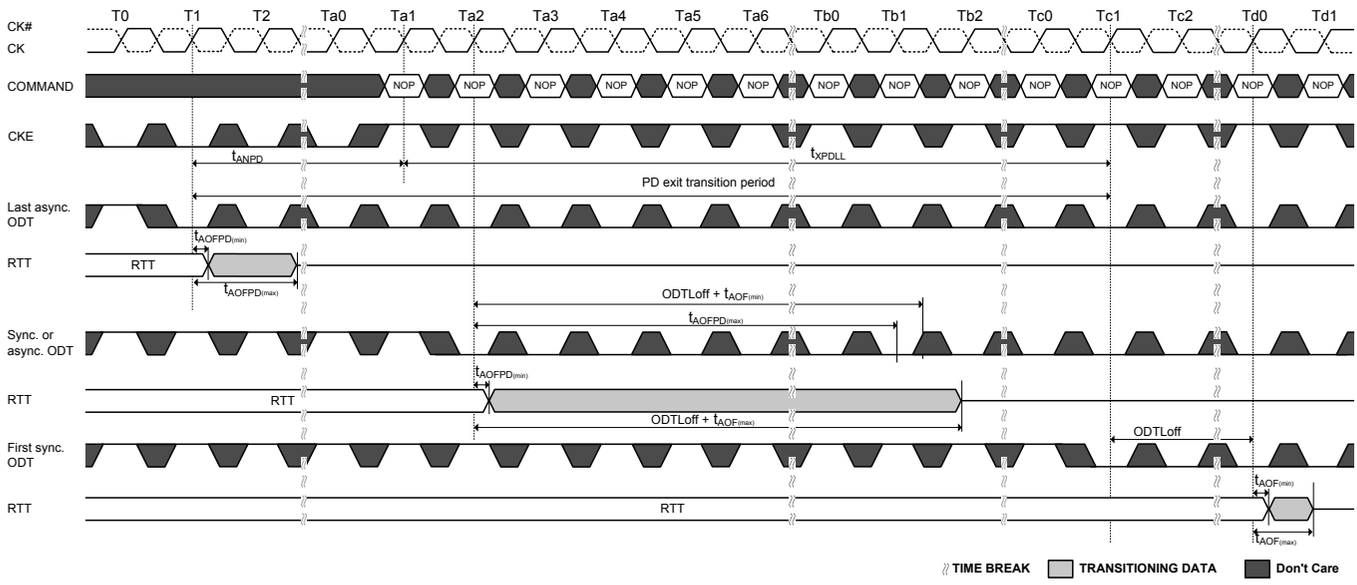

chanhvinh.com



## Figure 76. Transition period for short CKE cycles, entry and exit period overlapping

**(AL = 0, WL = 5, tANPD = WL - 1 = 4)**

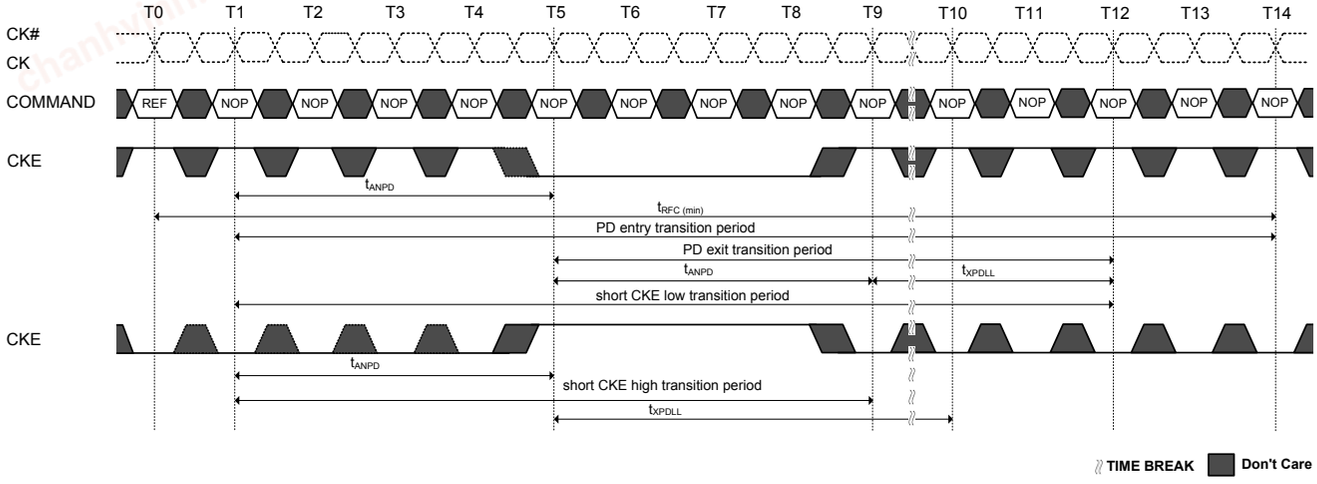


## Figure 77. Power-Down Entry,Exit Clarifications-Case 1

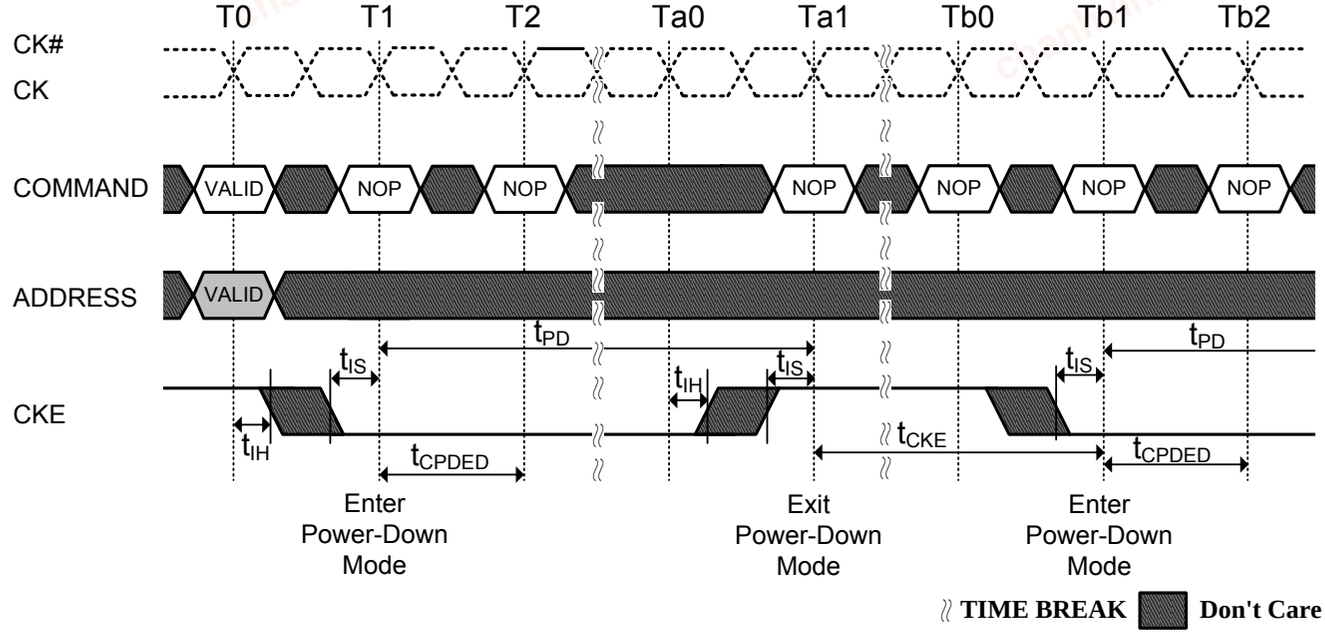

chanhvinh.com



## Figure 78. Power-Down Entry,Exit Clarifications-Case 2

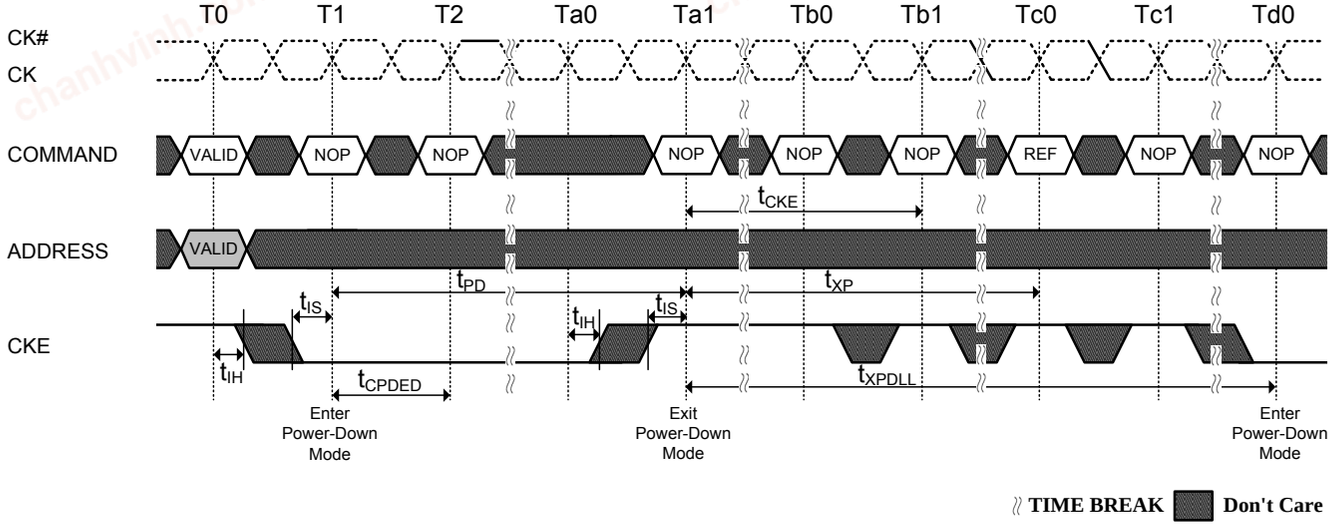


## Figure 79. Power-Down Entry,Exit Clarifications-Case 3

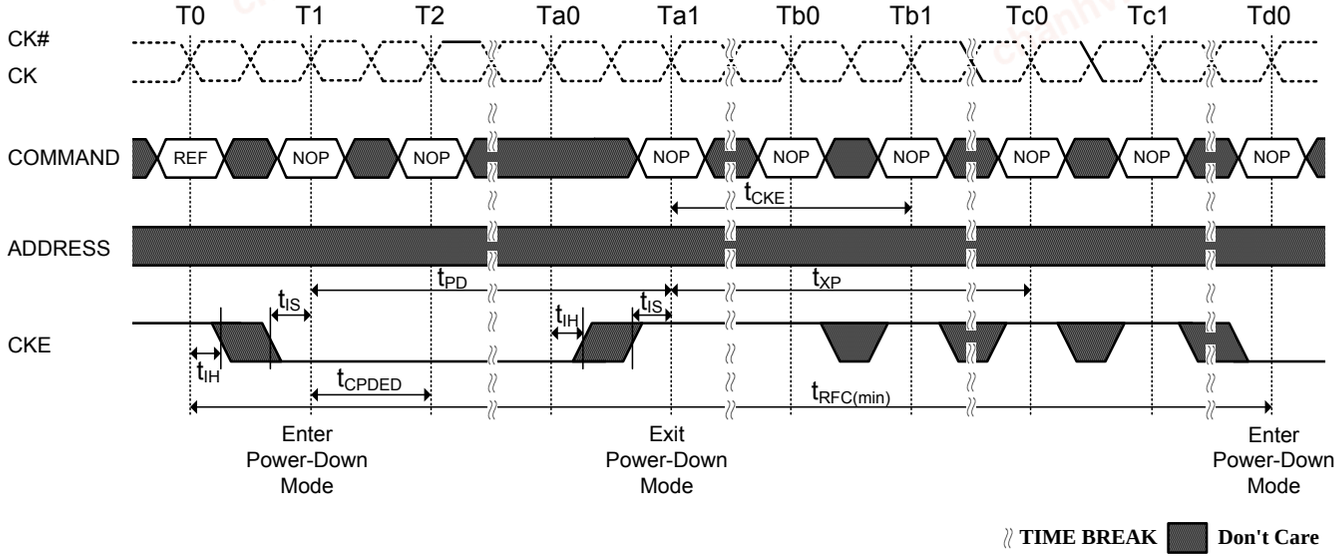

chanhvinh.com



**Figure 80. 78-Ball FBGA Package 8x10.5x1.0mm(max) Outline Drawing Information**

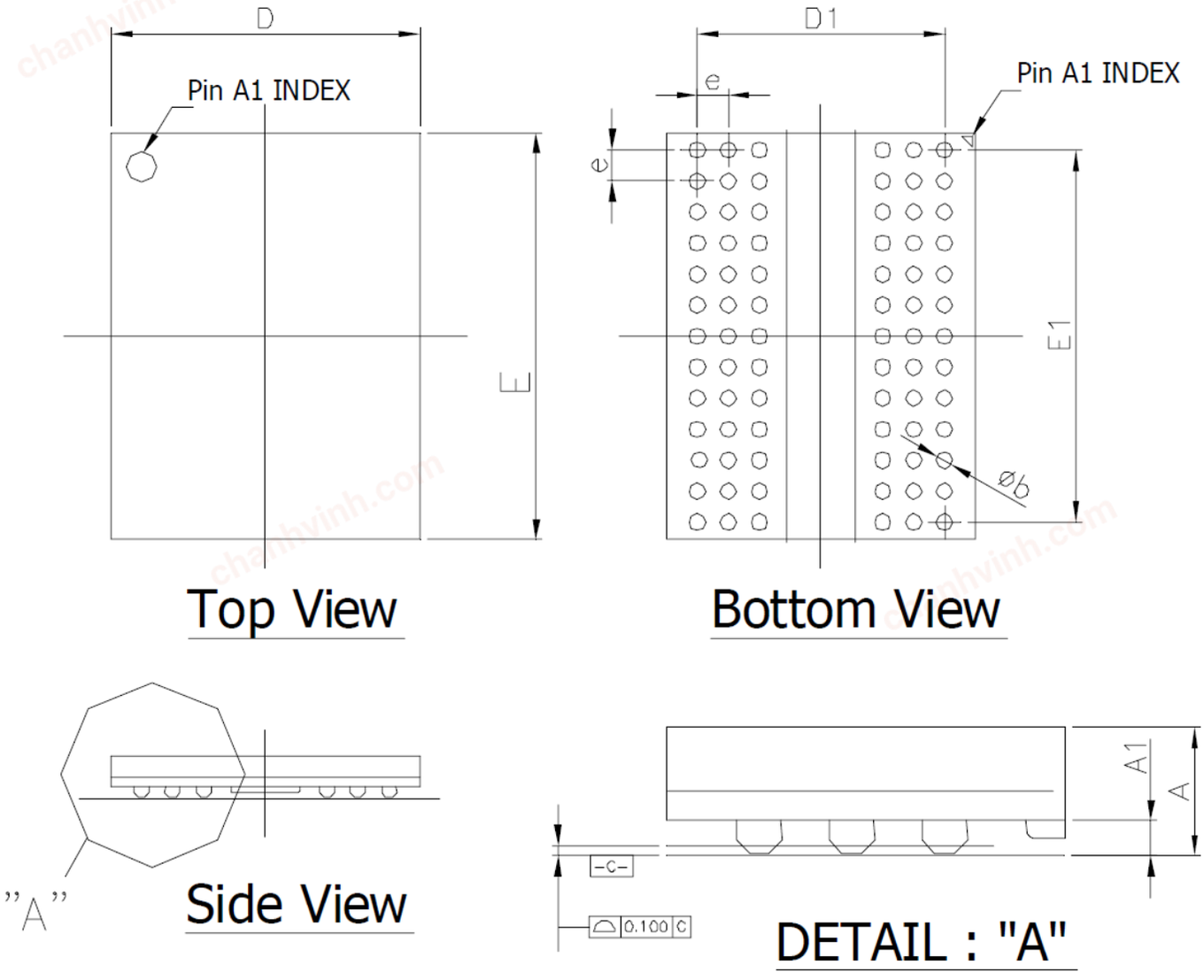


| Symbol | Dimension in inch | | | Dimension in mm | | |
|---|---|---|---|---|---|---|
| | Min | Nom | Max | Min | Nom | Max |
| A | -- | -- | 0.039 | -- | -- | 1.00 |
| A1 | 0.012 | -- | 0.016 | 0.25 | -- | 0.40 |
| D | 0.311 | 0.315 | 0.319 | 7.90 | 8.00 | 8.10 |
| E | 0.409 | 0.413 | 0.417 | 10.40 | 10.50 | 10.60 |
| D1 | -- | 0.252 | -- | -- | 6.40 | -- |
| E1 | -- | 0.378 | -- | -- | 9.60 | -- |
| e | -- | 0.031 | -- | -- | 0.80 | -- |
| b | 0.016 | 0.018 | 0.020 | 0.40 | 0.45 | 0.50 |

chanhvinh.com



## PART NUMBERING SYSTEM

| AS4C | 128M8D3LB | 12 | B | C/I | N | XX |
|---|---|---|---|---|---|---|
| DRAM | 128M8=128Mx8<br>D3L=LPDDR3<br>B=B die version | 12=800MHz | B = FBGA | C=Commercial<br>(0° C~+95° C)<br>I=Industrial<br>(-40° C~+95° C) | Indicates Pb and Halogen Free | Packing Type<br>None:Tray<br>TR:Reel |

Alliance Memory, Inc.
511 Taylor Way,
San Carlos, CA 94070
Tel: 650-610-6800
Fax: 650-620-9211
www.alliancememory.com

Copyright © Alliance Memory
All Rights Reserved

© Copyright 2007 Alliance Memory, Inc. All rights reserved. Our three-point logo, our name and Intelliwatt are trademarks or registered trademarks of Alliance. All other brand and product names may be the trademarks of their respective companies. Alliance reserves the right to make changes to this document and its products at any time without notice. Alliance assumes no responsibility for any errors that may appear in this document. The data contained herein represents Alliance's best data and/or estimates at the time of issuance. Alliance reserves the right to change or correct this data at any time, without notice. If the product described herein is under development, significant changes to these specifications are possible. The information in this product data sheet is intended to be general descriptive information for potential customers and users, and is not intended to operate as, or provide, any guarantee or warrantee to any user or customer. Alliance does not assume any responsibility or liability arising out of the application or use of any product described herein, and disclaims any express or implied warranties related to the sale and/or use of Alliance products including liability or warranties related to fitness for a particular purpose, merchantability, or infringement of any intellectual property rights, except as express agreed to in Alliance's Terms and Conditions of Sale (which are available from Alliance). All sales of Alliance products are made exclusively according to Alliance's Terms and Conditions of Sale. The purchase of products from Alliance does not convey a license under any patent rights, copyrights; mask works rights, trademarks, or any other intellectual property rights of Alliance or third parties. Alliance does not authorize its products for use as critical components in life-supporting systems where a malfunction or failure may reasonably be expected to result in significant injury to the user, and the inclusion of Alliance products in such life-supporting systems implies that the manufacturer assumes all risk of such use and agrees to indemnify Alliance against all claims arising from such use.