chanhvinh.com

Immersion Series | Thermistor

Stainless Steel Immersion, Thermistor

Automation Components
a DwyerOmega brand

The ACI Thermistor Immersion Series features a 6.35 mm (¼ in) diameter stainless steel probe with two, 35.6 mm (14 in), 0.65 mm (22 AWG) Etched Teflon colored lead wires depending on the probe length ordered to differentiate the different sensor types. The sensors in this series are manufactured using ACI's proven double encapsulation process to eliminate the effects of moisture and to increase the response times using our high quality, thermally conductive epoxy. The immersion sensors include a welded thermowell "-I" version but can be ordered without the welded thermowell "-INW" version. The "INW" version includes a standard ½ in NPS Male process thread to be used with an optional machined thermowell or in an existing thermowell application. Optional NEMA/IP rated enclosures and NIST certificates are available the back of the product data sheet.

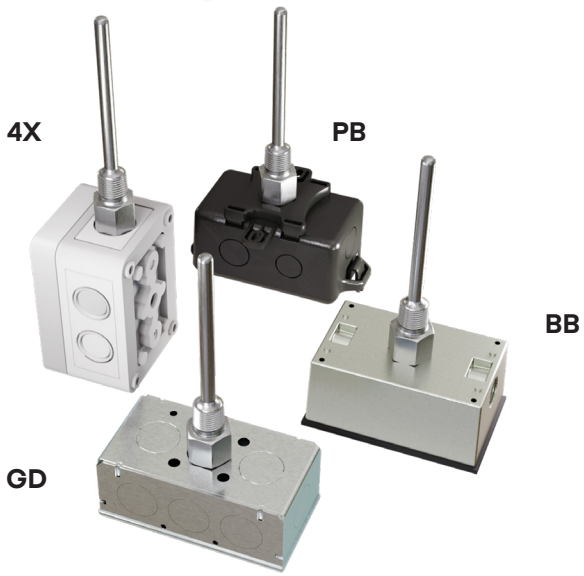

Applications

Chilled Water Systems, Hot Water Systems, Boilers, Pumps, Compressor, Chillers

Warranty

The ACI Thermistor Immersion Series is covered by ACI's Five (5) Year Limited Warranty. The warranty can be found in the front of ACI's Sensors & Transmitters catalog, as well as on ACI's website, workaci.com.

Disclaimer: Specification of any thermowell and the materials of construction are the sole responsibility of the designer of the system that incorporates the thermowell. Sole responsibility for ensuring compatibility of the process fluid with the system rests with the end user.

Specifications

Sensor Type: Thermistor

Sensor Curve: Non-Linear, NTC (Negative Temperature Coefficient)

Number Sensing Points: One

Number Wires: Two (Non-Polarity Sensitive)

Sensor Output at 25 °C (77 °F) | Lead Wire Colors

- **A/1.8K:** 1.8 kΩ nominal | Red/Yellow
- **A/3K:** 3 kΩ nominal | White/Brown
- **A/AN (Type III):** 10 kΩ nominal | White/White
- **A/AN-BC:** 5.238 kΩ nominal | White/Yellow
- **A/CP (Type II):** 10 kΩ nominal | White/Green
- **A/CSI:** 10 kΩ nominal | Green/Yellow
- **A/10KS:** 10 kΩ nominal | White/Blue
- **A/10K-E1:** 10 kΩ nominal | Gray/Orange
- **A/20K:** 20 kΩ nominal | Brown/Blue
- **A/50K:** 50 kΩ nominal | Brown/Yellow
- **A/100KS:** 100 kΩ nominal | Black/Yellow

Accuracy 0 °C to 70 °C (32 °F to 158 °F): ±0.2 °C (±0.36 °F) except:

- **A/10K-E1 Series:** ± 0.3 °C (±0.54 °F)
- **A/1.8K Series:** ±0.5 °C at 25 °C (77 °F) and (±1.0 °C) (±1.8 °F)

Stability: Sensor Dependent; Contact ACI for more information on specific sensor

Response Time (63 % Step Change): 10 seconds nominal

Power Dissipation Constant: 3 mW / °C except:

- **A/1.8K Series:** 1 mW / °C
- **A/10K-E1 Series:** 2 mW / °C

Sensor Operating Temperature Range: -40 °C to 150 °C (-40 °F to 302 °F)

Enclosure Specifications (Temperature, Flammability, NEMA/IP Ratings)

- **"-GD" Enclosure:** Galvanized Steel, -40 °C to 121 °C (-40 °F to 250 °F), NEMA 1 (IP10)
- **"-PB" Enclosure:** ABS Plastic, -30 °C to 100 °C (-22 °F to 212 °F), UL94-5VB, Plenum Rated
- **"-BB" Enclosure:** Aluminum, -40 °C to 121 °C (-40 °F to 250 °F), Plenum Rated, NEMA 3R
- **"-4X" Enclosure:** Polystyrene Plastic, -40 °C to 70 °C (-40 °F to 158 °F), UL94-V2, NEMA 4X (IP 66)

Storage Temperature Range: -40 °C to 85 °C (-40 °F to 185 °F)

Operating Humidity Range: 10 % to 95 % RH, non-condensing

Probe Diameter: 6.35 mm (0.25 in)

Thermowell Bore Diameter: 6.6 mm (0.26 in)

Probe Material: 304 Stainless Steel

Thermowell Material: 304 Stainless Steel

Thermowell Instrument: ½ in NPS (National Pipe Straight) Female Thread

Process Thread Size: ½ in NPT (National Pipe Tapered) Male Thread

Fitting Material | Flammability Rating: Polyamide 66 (High Performance Nylon 66) | UL94-HB

Fitting Thread Size: ½ in NPS (National Pipe Straight) Male Thread

Foam Pad Material | Flammability Rating: Neoprene/EPDM/SBR Polymer | UL94-HBF; FMVSS-302; MIL-R-6130C

Lead Length : 35.6 cm (14 in)

chanhvinh.com

Conductor Size: 0.65 mm (22 AWG)
Lead Wire Insulation I Wire Rating: Etched Teflon (PTFE) Colored Leads I Mil Spec 16878/4 Type E)
Conductor Material: Silver Plated Copper
Product Dimensions I Product Weight: See table on this product data sheet
Agency Approvals: CE, UKCA, RoHS2, WEEE

Automation Components a DwyerOmega brand

Maximum Velocity VS Thermowell Insertion Length Machined Thermowell

Straight Shank Insertion Length "U"					Stepped Shank Insertion Length "U"				
Material:	Media Type:	25.4 mm (1.0 in)	63.5 mm (2.5 in)	203.2 mm (8.0 in)	101.6 mm (4.0 in)	152.4 mm (6.0 in)	304.8 mm (12.0 in)	457.2 mm (18.0 in)	609.6 mm (24 in)
304/316 SS	Air/Gas/ Steam[1]	106.3 m/s (349 ft/s)	106.3 m/s (349 ft/s)	21.9 m/s (71.9 ft/s)	33.2 m/s (109 ft/s)	22.4 m/s (73.6 ft/s)	5.9 m/s (19.4 ft/s)	2.7 m/s (8.8 ft/s)	1.6 m/s (5.2 ft/s)
304/316 SS	Water	109.7 m/s (360 ft/s)	109.7 m/s (360 ft/s)	21.9 m/s (71.9 ft/s)	25.1 m/s (82.2 ft/s)	8.2 m/s (26.9 ft/s)	3.4 m/s (11.3 ft/s)	1.43 m/s (4.7 ft/s)	0.8 m/s (2.5 ft/s)

Note[1]: *Values are for Air/Gas/ Steam and similar density media based upon Max pressure of 200 bar (2900 PSI) at 537.8 °C (1000 °F)*
Note[2]: *Values are for Water (No Glycol or other Chemicals factored in) at 20 °C (68 °F) and max pressure of 393 bar (5700 PSI). (Calculated to ASME PTC 19.3 TW-2016 Code B31.1)*
Note[3]: *6 in to 24 in Machined Thermowells meet ASME PTC 19.3 TW-2016 Code B31.1.*

Maximum Pressure VS Temperature Ratings Two-Part Fabricated I Welded Thermowell

Material:	21.1 °C (70 °F)	93.3 °C (200 °F)	204.4 °C (400 °F)	315.6 °C (600 °F)	426.7 °C (800 °F)	537.8 °C (1000 °F)	648.9 °C (1200 °F)
304/316 SS	67.7 Bar (982 PSI)	56.6 Bar (820 PSI)	46.5 Bar (675 PSI)	41.6 Bar (604 PSI)	37.9 Bar (550 PSI)	35.1 Bar (510 PSI)	20.0 Bar (290 PSI)

Maximum Fluid Velocity Ratings Two-Part Fabricated I Welded Thermowell

Straight Shank Insertion Length "U"				
Material:	Media Type:	63.5 mm (2.5 in)	101.6 mm (4.0 in)	152.4 mm (6.0 in)
304/316 SS	Air/Gas/Steam[2]	51.5 m/s (169 ft/s)	18.6 m/s (61 ft/s)	6.1 m/s (20 ft/s)
304/316 SS	Water	26.8 m/s (88 ft/s)	6.1 m/s (20 ft/s)	3.05 m/s (10 ft/s)

Note[2]: *Values are for Air/Gas/ Steam and similar density media.*

chanhvinh.com

Dimensions and Weight

Plastic Box Enclosure (PB)

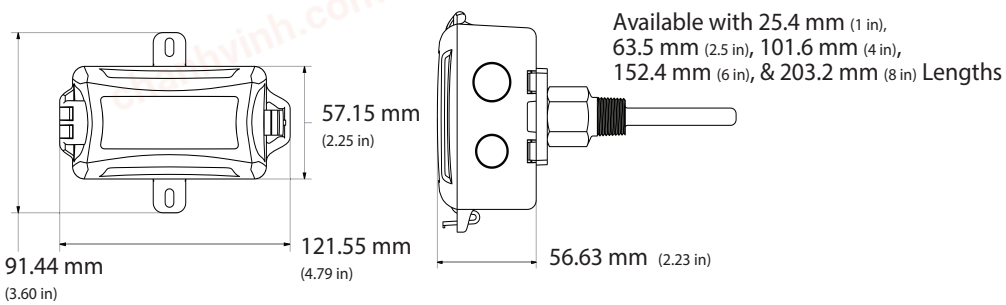

ACI Model #	25.4 mm (1 in)	63.5 mm (2.5 in)	101.6 mm (4 in)	152.4 mm (6 in)	203.2 mm (8 in)
A/xx-INW-yy-PB	0.091 kg (0.20 lb)	0.109 kg (0.24 lb)	0.127 kg (0.28 lb)	0.145 kg (0.32 lb)	0.163 kg (0.36 lb)
A/xx-I-yy-PB	N/A	0.254 kg (0.56 lb)	0.272 kg (0.60 lb)	0.290 kg (0.64 lb)	N/A
A/xx-IM-yy-PB	0.182 kg (0.40 lb)	0.263 kg (0.58 lb)	0.336 kg (0.74 lb)	0.417 kg (0.92 lb)	0.522 kg (1.15 lb)

N/A = *Not Available* | **xx** = *Sensor Type* | **yy** = *Insertion Length*

Galvanized Enclosure (GD)

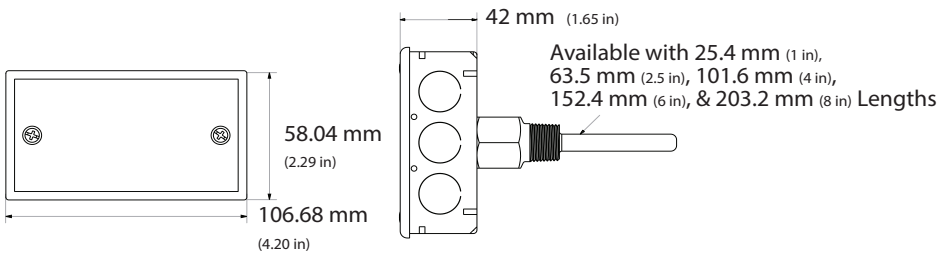

ACI Model #	25.4 mm (1 in)	63.5 mm (2.5 in)	101.6 mm (4 in)	152.4 mm (6 in)	203.2 mm (8 in)
A/xx-INWyy-GD	0.281 kg (0.62 lb)	0.299 kg (0.66 lb)	0.318 kg (0.7 lb)	0.336 kg (0.74 lb)	0.354 kg (0.78 lb)
A/xx-I-yy-GD	N/A	0.399 kg (0.88 lb)	0.454 kg (1 lb)	0.472 kg (1.04 lb)	N/A
A/xx-IM-yy-GD	0.367 kg (0.81 lb)	0.454 kg (1 lb)	0.526 kg (1.16 lb)	0.599 kg (1.32 lb)	0.703 kg (1.55 lb)

Bell Box Enclosure (BB)

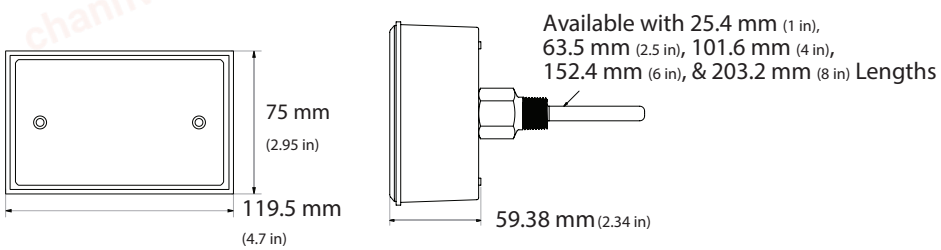

ACI Model #	25.4 mm (1 in)	63.5 mm (2.5 in)	101.6 mm (4 in)	152.4 mm (6 in)	203.2 mm (8 in)
A/xx-INW-yy-BB	0.29 kg (0.64 lb)	0.308 kg (0.68 lb)	0.318 kg (0.7 lb)	0.336 kg (0.74 lb)	0.363 kg (0.8 lb)
A/xx-I-yy-BB	N/A	0.463 kg (1.02 lb)	0.454 kg (1 lb)	0.472 kg (1.04 lb)	N/A
A/xx-IM-yy-BB	0.376 kg (0.83 lb)	0.463 kg (1.02 lb)	0.526 kg (1.16 lb)	0.599 kg (1.32 lb)	0.721 kg (1.59 lb)

chanhvinh.com

Automation Components
a DwyerOmega brand

NEMA 4X Enclosure (4X)

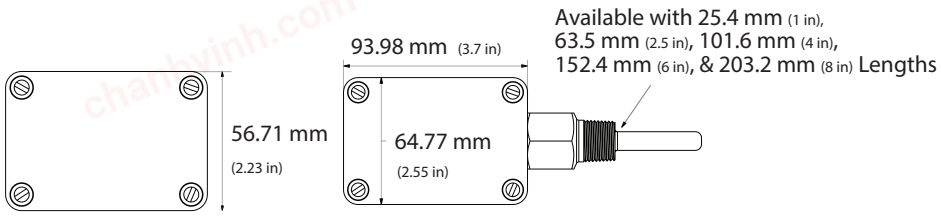

ACI Model #	25.4 mm (1 in)	63.5 mm (2.5 in)	101.6 mm (4 in)	152.4 mm (6 in)	203.2 mm (8 in)
A/xx-INW-yy-4X	0.127 kg (0.28 lb)	0.145 kg (0.32 lb)	0.163 kg (0.36 lb)	0.181 kg (0.40 lb)	0.2 kg (0.44 lb)
A/xx-I-yy-4X	N/A	0.290 kg (0.64 lb)	0.308 kg (0.68 lb)	0.327 kg (0.72 lb)	N/A
A/xx-IM-yy-4X	0.218 kg (0.48 lb)	0.299 kg (0.66 lb)	0.372 kg (0.82 lb)	0.454 kg (1 lb)	0.576 kg (1.27 lb)

N/A = *Not Available* | **xx** = *Sensor Type* | **yy** = *Insertion Length*

Probe and Insertion Length Immersion No Well

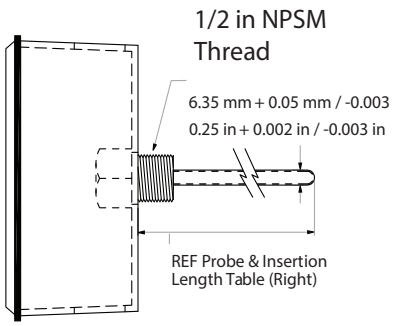

Pictured Above: immersion no well (INW) sensor in Bell Box Enclosure (BB).

Pictured Below: welded two piece thermowell to show connection and depth reference. Thermowell not included with immersion no well (INW).

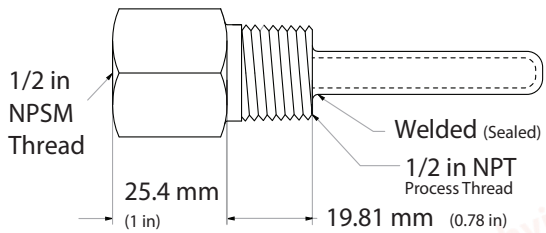

Probe Length	Insertion Length	ACI Part #	Thermowell Part #
7.62 cm (3 in)	7.14 cm ± 0.33 cm (2.81 in ± 0.13 in)	A/xx-INW-1"-yy-zz	A/M1"
11.43 cm (4.5 in)	10.95 cm ± 0.33 cm (4.31 in ± 0.13 in)	A/xx-INW-2.5"-yy-zz	A/2.5" or A/M2.5"
15.24 cm (6 in)	14.76 cm ± 0.33 cm (5.81 in ± 0.13 in)	A/xx-INW-4"-yy-zz	A/4" or A/M4"
20.32 cm (8 in)	19.84 cm ± 0.33 cm (7.81 in ± 0.13 in)	A/xx-INW-6"-yy-zz	A/6" or A/M6"
25.4 cm (10 in)	24.92 cm ± 0.33 cm (9.81 in ± 0.13 in)	A/xx-INW-8"-yy-zz	A/M8"
33.02 cm (13 in)	32.39 cm ± 0.13 cm (12.75 in ± 0.13 in)	A/xx-INW-12"-yy-zz	A/M12"
48.26 cm (19 in)	47.63 cm ± 0.33 cm (18.75 in ± 0.13 in)	A/xx-INW-18"-yy-zz	A/M18"
63.5 cm (25 in)	62.87 cm ± 0.33 cm (24.75 in ± 0.13 in)	A/xx-INW-24"-yy-zz	A/M24"

chanhvinh.com

Automation Components
a DwyerOmega brand

Custom Ordering Welded Thermowell

		Options and Descriptions	Model #
A.	**Sensor Series** *No Selection Required*	A/ →	A/
B.	**Model Series** *Select One (1)*	**1.8K** **3K** **AN** **AN-BC** **CP** **CSI** **10KS** **10K-E1** **20K** **100KS**	
C.	**Configuration** *Select One (1)*	**I** = Immersion with Welded Thermowell	
D.	**Insertion Length** *Select One (1)*	**2.5"** = 63.5 mm (2.5 in) insertion; **4"** = 101.6 mm (4 in) insertion; **6"** = 152.4 mm (6 in) insertion	
E.	**Enclosure** *Select One (1)*	**GD** = Galvanized; **PB** = Plastic; **BB** = Aluminum, NEMA 3R; **4X** = NEMA 4X	
F.	**NIST** *Select One (1)*	**----** = No NIST Certificate; **NIST** = NIST Certificate (3 Points)	

Model # Example:	A/	1.8K	I	4"	GD	NIST
	A.	**B.**	**C.**	**D.**	**E.**	**F.**

Custom Ordering Machined Thermowell

		Options and Descriptions	Model #
A.	**Sensor Series** *No Selection Required*	A/ →	A/
B.	**Model Series** *Select One (1)*	**1.8K** **3K** **AN** **AN-BC** **CP** **CSI** **10KS** **10K-E1** **20K** **100KS**	
C.	**Configuration** *Select One (1)*	**IM** = Immersion with Machined Thermowell	
D.	**Insertion Length** *Select One (1)*	**1"** = 25.4 mm (1 in) insertion; **2.5"** = 63.5 mm (2.5 in) insertion; **4"** = 101.6 mm (4 in) insertion; **6"** = 152.4 mm (6 in) insertion; **8"** = 203.2 mm (8 in) insertion	
E.	**Enclosure** *Select One (1)*	**GD** = Galvanized; **PB** = Plastic; **BB** = Aluminum, NEMA 3R; **4X** = NEMA 4X	
F.	**NIST** *Select One (1)*	**----** = No NIST Certificate; **NIST** = NIST Certificate (3 Points)	

Model # Example:	A/	1.8K	IM	4"	GD	NIST
	A.	**B.**	**C.**	**D.**	**E.**	**F.**

Note: *Machined Thermowells with lengths of 304.8 mm (12 in), 457.2 mm (18 in) and 609.6 mm (24 in) are available and must be ordered separately | See the Machined Thermowells Data Sheet (Accessories)*

chanhvinh.com

Automation Components
a DwyerOmega brand

Custom Ordering Sensor Only No Thermowell

		Options and Descriptions	Model #
A.	**Sensor Series** *No Selection Required*	A/ ⟶	A/
B.	**Model Series** *Select One (1)*	**1.8K** **3K** **AN** **AN-BC** **CP** **CSI** **10KS** **10K-E1** **20K** **100KS**	
C.	**Configuration** *Select One (1)*	**INW** = Immersion without Thermowell	
D.	**Insertion Length** *Select One (1)*	**1"** = 25.4 mm (1 in) insertion; **2.5"** = 63.5 mm (2.5 in) insertion; **4"** = 101.6 mm (4 in) insertion; **6"** = 152.4 mm (6 in) insertion; **8"** = 203.2 mm (8 in) insertion **12"** = 304.8 mm (12 in) insertion; **18"** = 457.2 mm (18 in) insertion; **24"** = 609.6 mm (24 in) insertion	
E.	**Enclosure** *Select One (1)*	**GD** = Galvanized; **PB** = Plastic; **BB** = Aluminum, NEMA 3R; **4X** = NEMA 4X	
F.	**NIST** *Select One (1)*	**----** = No NIST Certificate; **NIST** = NIST Certificate (3 Points)	

Model # Example:	A/	1.8K	INW	1"	GD	NIST
	A.	**B.**	**C.**	**D.**	**E.**	**F.**

Accessories Ordering

Model #	Item #	Description
NSG Heat Transfer Paste 2 oz.	102595	Thermal Grease, 59.1 ml (2 oz) Tube, Silicone Free, -40 °C to 160 °C (-40 °F to 320 °F)
NSG Heat Transfer Paste 16 oz.	140574	Thermal Grease, 473.1 ml (16 oz) Jar, Silicon Free, -40 °C to 198 °C (-40 °F to 390 °F)
A/2.5"	128349	63.5 mm (2.5 in) Insertion, 304 Stainless, Welded, ½ in NPT Thermowell
A/4"	128350	101.6 mm (4 in) Insertion, 304 Stainless, Welded, ½ in NPT Thermowell
A/6"	128351	152.4 mm (6 in) Insertion, 304 Stainless, Welded, ½ in NPT Thermowell
A/M1"	128337	25.4 mm (1 in) Insertion, 304 Stainless, Machined, ½ in NPT Thermowell
A/M2.5"	128338	63.5 mm (2.5 in) Insertion, 304 Stainless, Machined , ½ in NPT Thermowell
A/M4"	128343	101.6 mm (4 in) Insertion, 304 Stainless, Machined, ½ in NPT Thermowell
A/M6"	128344	152.4 mm (6 in) Insertion, 304 Stainless, Machined, ½ in NPT Thermowell
A/M8"	138725	203.2 mm (8 in) Insertion, 304 Stainless, Machined, ½ in NPT Thermowell
A/M12"	128339	304.80 mm (12 in) Insertion, 304 Stainless, Machined, ½ in NPT Thermowell
A/M18"	128341	457.20 mm (18 in) Insertion, 304 Stainless, Machined, ½ in NPT Thermowell
A/M24"	128342	609.6 mm (24 in) Insertion, 304 Stainless, Machined, ½ in NPT Thermowell
A/M2.5" - 316SS	128352	63.5 mm (2.5 in) Insertion, 316 Stainless, Machined, ½ in NPT Thermowell
A/M4" - 316SS	128353	101.6 mm (4 in) Insertion, 316 Stainless, Machined, ½ in NPT Thermowell
A/M6" - 316SS	128354	152.4 mm (6 in) Insertion, 316 Stainless, Machined, ½ in NPT Thermowell

Model # Example: **NSG Heat Transfer Paste 2 oz.** or **102595**

DWYEROMEGA™
Improving the world, one measurement at a time.™