chanhvinh.com

3M™ Accessories

.100" x .100" Wiremount Socket

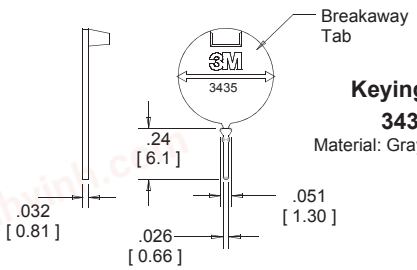

Keying Plug
3435-0
Material: Gray Polyester (PBT)

RoHS* compliant

Contact Quantity	Dim B	Dim C
6	.48 [12.2]	n/a
8	.58 [14.7]	n/a
10	0.68 [17.3]	0.62 [15.7]
14	0.88 [22.4]	0.82 [20.8]
16	0.98 [24.9]	0.92 [23.4]
20	1.18 [30.0]	1.12 [28.4]
24	1.38 [35.1]	1.32 [33.5]
26	1.48 [37.6]	1.42 [36.1]
30	1.68 [42.7]	1.62 [41.1]
34	1.88 [47.8]	1.82 [46.2]
36	1.98 [50.3]	1.92 [48.8]
40	2.18 [55.4]	2.12 [53.8]
44	2.38 [60.5]	2.32 [58.9]
50	2.68 [68.1]	2.62 [66.5]
60	3.18 [80.8]	3.12 [79.2]

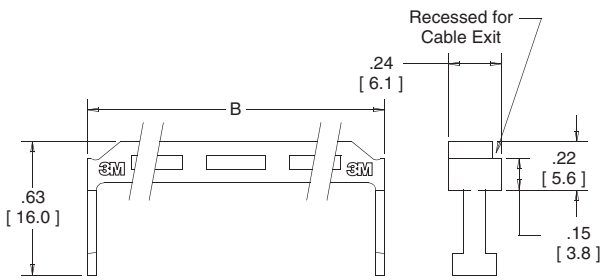

Plastic
Material: Gray Polyester (PBT)

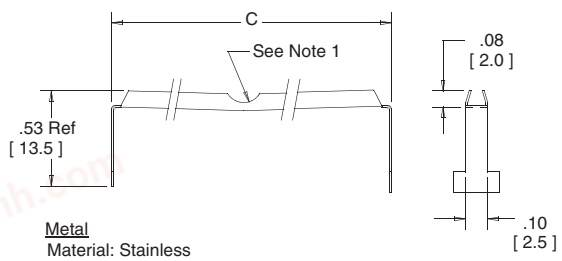

Metal
Material: Stainless
Steel pasivated

Strain Relief
3448-X0XX

Type:
2 = Metal
10-60 Position
3 = Plastic

XX= "Contact Quantity" of Socket: (i.e. 50 for 50 Position Strain Relief)

Note:
1. The notch is non-existent on 40 position and larger.
2. RoHS* compliant

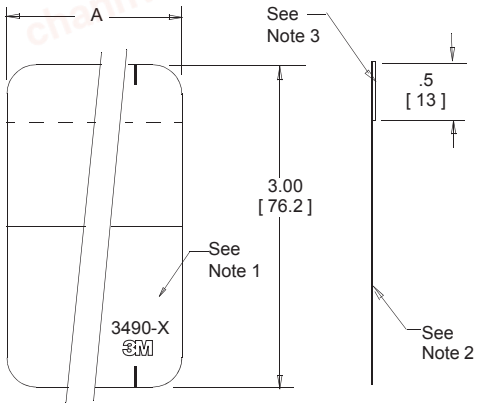

Standard Pull Tab
3490

*"RoHS compliant" means that the product or part does not contain any of the following substances in excess of the following maximum concentration values in any homogeneous material, unless the substance is in an application that is exempt under RoHS: (a) 0.1% (by weight) for lead, mercury, hexavalent chromium, polybrominated biphenyls or polybrominated diphenyl ethers; or (b) 0.01% (by weight) for cadmium. Unless otherwise stated in writing by 3M, this information represents 3M's knowledge and belief based on information provided by third party suppliers to 3M.

3M Part Number	Dimension A ± .02
3490-1	0.50 [12.7]
3490-2	1.00 [25.4]
3490-3	1.50 [38.1]
3490-4	2.00 [50.8]
3490-5	2.50 [63.5]
3490-7	3.10 [78.7]
3490-6	3.25 [82.6]
3490-9 "No Product Labeling"	1.50 [38.1] width 2.00 [50.8] length
3490-10	0.26 [6.6]

Notes:
1. Matte finish for ink labeling.
2. Material: Polyester
   Thickness: .005 ± .001
   Flammability: Oxygen index minimum 28, ASTM D-2863.
3. Material: Double sided adhesive tape with liner.
4. RoHS compliant*.

Inch
[mm]

Tolerance Unless Noted			
	.0	.0.	.00.
Inch	±.1	±.01	±..005

[ ] Dimensions for Reference Only

TS-0720-E
Date Modified: April 3, 2013
Sheet 1 of 1

3M
Electronic Solutions Division
Interconnect Solutions
http://www.3Mconnectors.com

3M is a trademark of 3M Company.
For technical, sales or ordering information call
800-225-5373

chanhvinh.com

3M™ Accessories

.100" x .100" Wiremount Socket

Polarizing Post

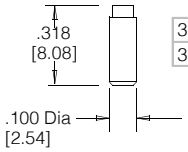

3201-4	LCP	Black
3201-5	PBT	Gray

Note: Insert Post into one mounting hardware hole on bottom of header. Set post to protrude .115" [2.92]

Polarizing Keys

			Dim A
N3518	LCP	Black	.02
3518	PBT	Gray	.02

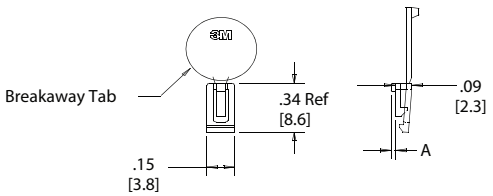

Note: #2216 B/A Scotchweld can be used to adhere keys.

Mounting Hardware

3341-5
(Installed from bottom of board)

3341-6
(Must be inserted prior to latch or vertical headers)

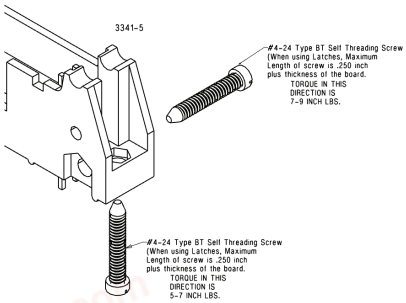

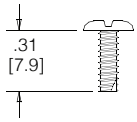

'anhead Thread Cutting Screw:
4-24 X 5/16"
ype: USA Std BT, Federal BG

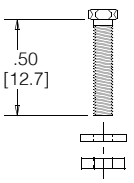

Hex Head Bolt, Nut and Was
Bolt - #2-56 X 1/2"

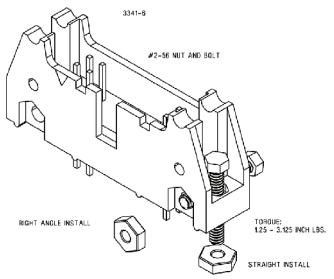

3341-5 & 6
Material - Stainless Steel

3M
Electronic Solutions Division
Interconnect Solutions
http://www.3Mconnectors.com

3M is a trademark of 3M Company.
For technical, sales or ordering information call
800-225-5373

chanhvinh.com

3M is a trademark of 3M Company.

Important Notice

All statements, technical information, and recommendations related to 3M's products are based on information believed to be reliable, but the accuracy or completeness is not guaranteed. Before using this product, you must evaluate it and determine if it is suitable for your intended application. You assume all risks and liability associated with such use. Any statements related to the product which are not contained in 3M's current publications, or any contrary statements contained on your purchase order shall have no force or effect unless expressly agreed upon, in writing, by an authorized officer of 3M.

Warranty; Limited Remedy; Limited Liability.

This product will be free from defects in material and manufacture for a period of one (1) year from the time of purchase. **3M MAKES NO OTHER WARRANTIES INCLUDING, BUT NOT LIMITED TO, ANY IMPLIED WARRANTY OF MERCHANTABILITY OR FITNESS FOR A PARTICULAR PURPOSE.** If this product is defective within the warranty period stated above, your exclusive remedy shall be, at 3M's option, to replace or repair the 3M product or refund the purchase price of the 3M product. **Except where prohibited by law, 3M will not be liable for any indirect, special, incidental or consequential loss or damage arising from this 3M product, regardless of the legal theory asserted.**

3M Electronics Solutions Division
6801 River Place Blvd.
Austin, TX 78726-9000
U.S.A.
1-800-225-5373
www.3Mconnectors.com

Please recycle. Printed in USA.
© 3M 2012. All rights reserved.
RIA-2217B-E